Data Sheet | Item Number: 890-3102

Socket for PCBs; straight; 2-pole; Cod. I; blue

https://www.wago.com/890-3102

Color: blue

Similar to illustration

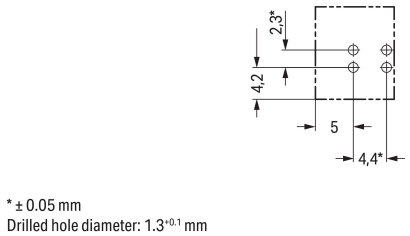

Dimensions in mm

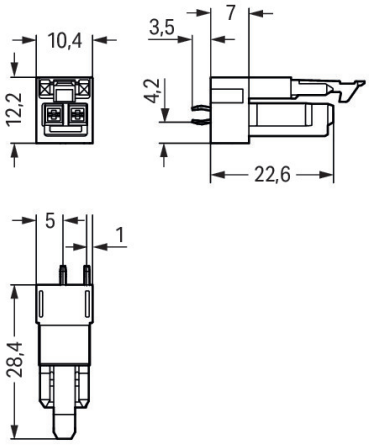

Dimensions in mm

Female connector/socket *WINSTA*® MINI rated current 16 A

Secure electrical installations with exceptional connection technology: The *WINSTA*® MINI female connector/socket. The pluggable PCB connectors with spring pressure connection technology and Push-in CAGE CLAMP® technology from WAGO allow fast, vibration-proof, maintenance-free terminal connections. The color coding and mechanical coding of the pcb connectors ensure error-free installation of the individual components – including protection against mismating.- *WINSTA*® MINI pcb connectors with I coding in blue are primarily suitable for easy lighting installation, for instance for the dimming of DALI lights. Thanks to its particularly small dimensions, our *WINSTA*® MINI Pluggable Connection System with Push-in CAGE CLAMP® spring pressure connection technology is very suitable in very tight spaces, i.e., for installations when very little room is available.

Push-in CAGE CLAMP® spring pressure connection technology – pluggable installation instead of laborious screw connections!

The WINSTA® Pluggable Connection System allows pluggable electrical installation. This significantly reduces the need for servicing and lowers costs. Now you can also cut installation costs without compromising quality and safety: with marking reduces the need for servicing and prevents unnecessary downtime.

- effective protection against mismating
- compact design for conductors with a cross-section up to 1.5 mm²
- for lighting management
- rapid, structured electrical installation

Continued on next page

Notes

General safety information	1. Only to be used by a qualified electrician or by a person electrically instructed for the task (EIP per DIN VDE 0105-100). 2. Do not install while energized or under load. 3. Use only for its intended purpose. 4. Observe applicable national regulations, standards and directives. 5. Observe the technical specifications of the products. 6. Ensure correct polarity assignment. 7. Do not use damaged or contaminated components. 8. Observe conductor types, conductor cross-sections, strip lengths and cable diameters. 9. Insert conductors up to the stop. 10. Use only with locking lever and strain relief. 11. Use original accessories only. **To be sold only with installation instructions!**

Electrical data

Ratings per	IEC/EN 60664-1		
Overvoltage category	III	III	II
Pollution degree	3	2	2
Nominal voltage	250 V	-	-
Rated impulse withstand voltage	4 kV	-	-
Rated current	16 A	-	-

Approvals per	UL 1977
Rated voltage	600 V
Rated current	14 A

General information

Note on contact resistance	approx. 1 mΩ of contact resistance approx. 0.25 mΩ contact transition plug/socket

Connection Data

Total number of potentials	2

Connection 1

Pole number	2

Physical data

Pin spacing	4.4 mm / 0.173 inches
Width	10.4 mm / 0.41 inches
Height	31.9 mm / 1.256 inches
Height from the surface	28.4 mm / 1.118 inches
Depth	12.2 mm / 0.48 inches
Solder pin length	3.5 mm
Solder pin dimensions	1 x 0.8 mm
Drilled hole diameter	$1.3^{(+0.1)}$ mm

Mechanical data

Use	DALI, Lighting Management
Coding	I
Variable coding	No
Marking	+ -
Potential marking	+ -
Mating force of a plug-in connection	approx. 20 ... 70 N (depending on pole number)
Retention force of a plug-in connection	Locked: > 80 N
Unmating force of a plug-in connection	Unlocked: approx. 20 ... 70 N (depending on pole number)
Number of mating cycles	200, without resistive load
Design	straight

 Continued on next page

Plug-in connection

Contact type (pluggable connector)	Female connector/socket
Connector (connection type)	for PCB
Mismating protection	Yes
Note on mismating protection	All *WINSTA®* components are 100% protected against mismating when: a.) plugging different numbers of poles b.) plugging while rotated 180 c.) plugging while laterally staggered d.) plugging one pole
Mating direction to the PCB	90 °
Locking lever	Yes
Locking of plug-in connection	Locking lever
Note on locking system	All connectors for mounted installations (snap-in versions for lighting fixtures or devices, all types of PCB and distribution connectors) are factory-equipped with locking levers to ensure plugs and sockets are securely locked. Additional locking levers are only required for flying leads (plug/socket).

PCB contact

PCB contact	THT
Solder pin arrangement	2 in-line solder pins/pole
Number of solder pins per potential	2

Material data

Note (material data)	Information on material specifications can be found here
Color	blue
Cover color	gray
Material group	I
Insulation material (main housing)	Polyamide (PA66)
Flammability class per UL94	V0
Clamping spring material	Chrome-nickel spring steel (CrNi)
Contact material	Copper or copper alloy; surface-treated
Contact Plating	Tin
Fire load	0.038 MJ
Weight	2.5 g

Environmental requirements

Processing temperature	-5 … +40 °C
Continuous operating temperature	-35 … +85 °C
Note on continuous operating temperature	Insulating parts for temperatures ≤ 105 °C

Commercial data

PU (SPU)	100 pcs
Packaging type	Box
Country of origin	PL
GTIN	4050821695899
Customs tariff number	85366990990

 Continued on next page

Product Classification

UNSPSC	39121409
eCl@ss 10.0	27-44-06-05
eCl@ss 9.0	27-44-06-05
ETIM 9.0	EC002637
ETIM 10.0	EC002637
ECCN	NO US CLASSIFICATION

Environmental Product Compliance

RoHS Compliance Status	Compliant,No Exemption

Approvals / Certificates

General approvals

Approval	Standard	Certificate Name
CCA DEKRA Certification B.V.	EN 61535	71-123231
CCA DEKRA Certification B.V.	IEC 61535	NL-85020
cURus Underwriters Laboratories Inc.	UL 1977	E45171

Approvals for marine applications

Approval	Standard	Certificate Name
ABS American Bureau of Shipping	Steel Vessel Rules	24-0095973-PDA
DNV GL Det Norske Veritas, Germanischer Lloyd	-	TAE00001Z6
LR Lloyds Register	EN 61535	08/20047 (E2)
PRS Polski Rejestr Statków	-	TE/1096/880590/23

Declarations of conformity and manufacturer's declarations

Approval	Standard	Certificate Name
EU-Declaration of Conformity WAGO GmbH & Co. KG	-	-
UK-Declaration of Conformity WAGO GmbH & Co. KG	-	-

 Continued on next page

Downloads

Environmental Product Compliance

Compliance Search

Environmental Product Compliance 890-3102

CAD/CAE-Data

CAD data

2D/3D Models 890-3102

CAE data

ZUKEN Portal 890-3102

PCB Design

Symbol and Footprint via SamacSys 890-3102

Symbol and Footprint via Ultra Librarian 890-3102