2-1633961-2 ✔ ACTIVE

AMP

TE Internal #: 2-1633961-2

OCEAN, Spare & Wear Tooling

View on TE.com >

Application Tooling > Spare & Wear Tooling



Applicator & Product Style: **OCEAN**

EU RoHS Compliance: **Compliant**

EU ELV Compliance: **Compliant**

Features

Other

Applicator & Product Style	OCEAN
EU RoHS Compliance	Compliant
EU ELV Compliance	Compliant

Product Compliance

For compliance documentation, visit the product page on TE.com>

EU RoHS Directive 2011/65/EU	Compliant
EU ELV Directive 2000/53/EC	Compliant
China RoHS 2 Directive MIIT Order No 32, 2016	No Restricted Materials Above Threshold
EU REACH Regulation (EC) No. 1907/2006	Current ECHA Candidate List: JUNE 2024 (241) Candidate List Declared Against: JUNE 2024 (241) Does not contain REACH SVHC
Halogen Content	Low Halogen - Br, Cl, F, I < 900 ppm per homogenous material. Also BFR/CFR/PVC Free
Solder Process Capability	Not applicable for solder process capability

Product Compliance Disclaimer

This information is provided based on reasonable inquiry of our suppliers and represents our current actual knowledge based on the information they provided. This information is subject to change. The part numbers that TE has identified as EU RoHS compliant have a maximum concentration of 0.1% by weight in homogenous materials for lead, hexavalent chromium, mercury, PBB, PBDE, DBP, BBP, DEHP, DIBP, and 0.01% for cadmium, or qualify for an exemption to these limits as defined in the Annexes of Directive 2011/65/EU (RoHS2). Finished electrical and electronic equipment products will be CE marked as required by Directive 2011/65/EU. Components may not be CE marked. Additionally, the part

numbers that TE has identified as EU ELV compliant have a maximum concentration of 0.1% by weight in homogenous materials for lead, hexavalent chromium, and mercury, and 0.01% for cadmium, or qualify for an exemption to these limits as defined in the Annexes of Directive 2000/53/EC (ELV). Regarding the REACH Regulation, the information TE provides on SVHC in articles for this part number is based on the latest European Chemicals Agency (ECHA) 'Guidance on requirements for substances in articles' posted at this URL: https://echa.europa.eu/guidance-documents/guidance-on-reach

Compatible Parts



TE Part # 7-2150321-7
OCEAN_2.0_SPARE_PART_KIT-180F300F



TE Part # 2150321-2
OCEAN_2.0_Applicator-E-180F300F-REA

Customers Also Bought



TE Part #CAT-AM71-CH8172
AMP SUPERSEAL 1.5MM, CONNECTOR HOUSING



TE Part #DT04-2P
REC, 2P, GRY, N



TE Part #DT06-2S
PLG, 2P, GRY, N



TE Part #CAT-D487-W416
Wedgelocks: DEUTSCH DT



TE Part #CAT-D48-ST273
DEUTSCH Solid Contacts



TE Part #114017-ZZ
SEALING PLUG, SIZE 12/16, WHT

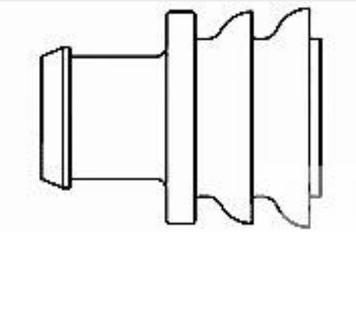

TE Part #281934-2
SINGLE WIRE SEAL

Documents

Instruction Sheets

Instruction Sheet (U.S.)

English