molex

Part Number : 358431230
Product Description : PT Bulb Socket Single Housing Assembly, Sealed, Type C, Natural
Series Number : 35843
Status : Obsolete
Product Category : Sockets

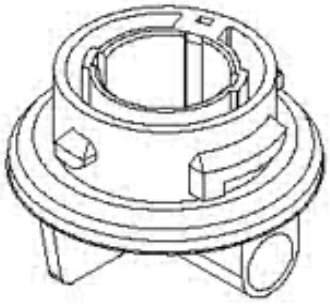

Obsolete

Documents and Resources

Drawings

358431230_sd.pdf

Specifications

PK-35843-001-001.pdf

Product Environment Compliance

Compliance

GADSL/IMDS	Duty-To-Declare
China RoHS	Not Relevant
EU ELV	Compliant per 2000/53/EC
Low-Halogen Status	Low-Halogen per IEC 61249-2-21
REACH SVHC	Not Contained per D(2025)4165-DC (25 June 2025)
EU RoHS	Compliant per EU 2015/863

Compliance Statements
- EU RoHS
- REACH SVHC
- Low-Halogen

Industry Documents
- IPC 1752A Class C
- IPC 1752A Class D
- Molex Product Compliance Declaration
- IEC-62474
- chemSHERPA (xml)

Substances of Interest

- PFAS

EU RoHS Certificate of Compliance

Additional Product Compliance Information

Part Details

General

Status	Obsolete
Category	Sockets
Series	35843
Description	PT Bulb Socket Single Housing Assembly, Sealed, Type C, Natural
Comments	EC-Type
Component Type	Socket
Product Name	Bulb Socket
UPC	822348853915

Electrical

Current - Maximum per Contact	5.0A, 7.0A
Voltage - Maximum	12V

Physical

Circuits (Loaded)	2
Circuits (maximum)	2
Color - Resin	Natural
Durability (mating cycles max)	30
Entry Angle	Vertical
Keying to Mating Part	None
Material - Resin	Nylon
Net Weight	10.100/g
Packaging Type	Bag
PCB Locator	No
PCB Retention	N/A
Pitch - Mating Interface	N/A
Temperature Range - Operating	-40° to +105°C
Termination Interface Style	Through Hole

Obsolete

Mates With / Use With

Mates with Part(s)

Description	Part Number
Mates With	Lamp

Use with Part(s)

Description	Part Number
Positive Terminal for PT Bulb Socket, AVSS 0.50~0.85mm^2	354648000
Earth Terminal for PT Bulb Socket, AVSS 0.50~0.85mm^2	354658000
Positive Silicone Rubber Wire Seal for Sealed PT Bulb Socket	359030096
Earth Silicone Rubber Wire Seal for Sealed PT Bulb Socket	359030106

Obsolete