Product data sheet
Characteristics

ZB6AV1
Head for pilot light, Harmony XB6, white, 16mm, integral LED

Main

Range of product	Harmony XB6
Product or component type	Head for pilot light
Product compatibility	Integral LED
Device short name	ZB6
Bezel material	Plastic
Mounting diameter	16 mm
Sale per indivisible quantity	1
Shape of signaling unit head	Round
Cap/operator or lens colour	White

Complementary

CAD overall width	18 mm
CAD overall height	18 mm
CAD overall depth	33 mm
Net weight	0.015 kg

Environment

Protective treatment	TC
Ambient air temperature for storage	-40…70 °C
Ambient air temperature for operation	-25…70 °C
Electrical shock protection class	Class II conforming to IEC 61140
IP degree of protection	IP65 conforming to IEC 60529
NEMA degree of protection	NEMA 13 conforming to UL 50 NEMA 4 conforming to UL 50 NEMA 4X conforming to UL 50 NEMA 13 conforming to CSA C22.2 No 94 NEMA 4 conforming to CSA C22.2 No 94 NEMA 4X conforming to CSA C22.2 No 94
Standards	EN/IEC 60947-5-5 EN/IEC 60947-5-1 CSA C22.2 No 14 JIS C 852 JIS C 4520 EN/IEC 60947-1 UL 508
Product certifications	CCC CSA UL GOST
Vibration resistance	+/- 3 mm (f= 2…500 Hz) conforming to IEC 60068-2-6 5 gn (f= 2…500 Hz) conforming to IEC 60068-2-6
Shock resistance	30 gn (duration = 18 ms) for half sine wave acceleration conforming to IEC 60068-2-27 50 gn (duration = 11 ms) for half sine wave acceleration conforming to IEC 60068-2-27

The information provided in this documentation contains general descriptions and/or technical characteristics of the performance of the products contained herein.
This documentation is not intended as a substitute for and is not to be used for determining suitability or reliability of these products for specific user applications.
It is the duty of any such user or integrator to perform the appropriate and complete risk analysis, evaluation and testing of the products with respect to the relevant specific application or use thereof.
Neither Schneider Electric Industries SAS nor any of its affiliates or subsidiaries shall be responsible or liable for misuse of the information contained herein.

Packing Units

Unit Type of Package 1	PCE
Number of Units in Package 1	1
Package 1 Height	2.0 cm
Package 1 Width	7.0 cm
Package 1 Length	7.0 cm
Package 1 Weight	7.0 g
Unit Type of Package 2	S01
Number of Units in Package 2	80
Package 2 Height	15.0 cm
Package 2 Width	15.0 cm
Package 2 Length	40.0 cm
Package 2 Weight	772.0 g

Offer Sustainability

Sustainable offer status	Green Premium product
REACh Regulation	REACh Declaration
EU RoHS Directive	Pro-active compliance (Product out of EU RoHS legal scope) EU RoHS Declaration
Mercury free	Yes
China RoHS Regulation	China RoHS Declaration
RoHS exemption information	Yes
Environmental Disclosure	Product Environmental Profile
Circularity Profile	End Of Life Information

Contractual warranty

Warranty	18 months

ZB6AV1

Circular Head for Pilot Light

Dimensions

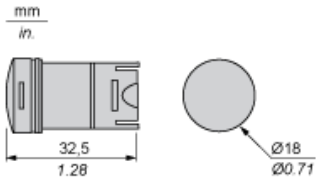

ZB6AV1

Panel Cut-out

For Square or Circular Head

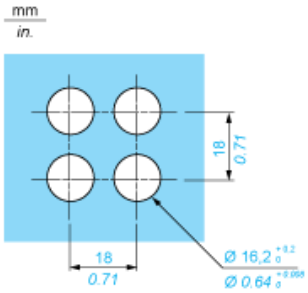

Pushbuttons, Switches and Pilot Lights for Printed Circuit Board Connection

Front Panel Cut-out (Viewed from Installer's Side)

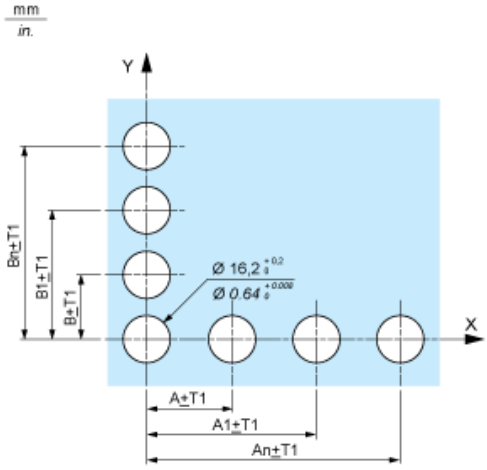

Printed Circuit Board Drillings (Viewed from Electrical Block Side)

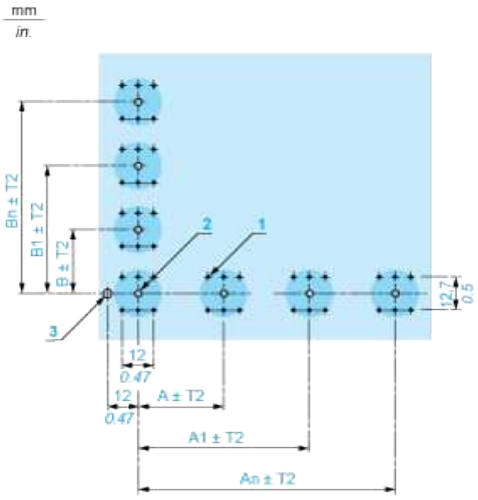

A 24 mm/0.94 in. minimum for rectangular heads, 18 mm/0.71 in. minimum for square or circular heads
B 18 mm/0.71 in. minimum
(1) 6 x Ø 1.1 mm / 6 x Ø 0.04 in. holes.
(2) 1 x Ø $2.6^{0}_{-0.2}$ mm / 1 x Ø $0.10^{0}_{-0.008}$ in. hole for locating pin, only when using socket adaptor ZB6Y010.
(3) 1 x Ø $3.2^{0}_{-0.2}$ mm / 1 x Ø $0.13^{0}_{-0.008}$ in. hole for fixing of printed circuit board onto the front panel using body bracket ZB6Y011. This hole must be drilled on the left-hand side, when heads are positioned at the normal angle. Fit a body bracket ZB6Y011 every 72 mm/2.83 in. maximum for cut-outs on 24 mm/0.94 in. centres (rectangular heads) and 54 mm/2.13 in. maximum for cut-outs on 18 mm/0.71 in. centres (square or circular heads).

General tolerances of the panel and printed circuit board: T1, T2: T1 + T2 = 0.3 mm/0.01 in. maximum.

Installation precautions:

Thickness of printed circuit board: 1.6 mm/0.06 in. minimum.

Mounting with Body Bracket

With socket adaptor ZB6Y010

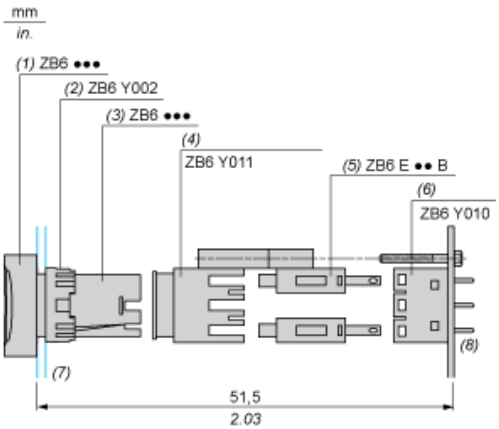

(1) Head
(2) Nut
(3) Body
(4) Body bracket
(5) Contact block
(6) Socket adaptor
(7) Panel
(8) Printed circuit

Direct mounting without socket adaptor ZB6Y010

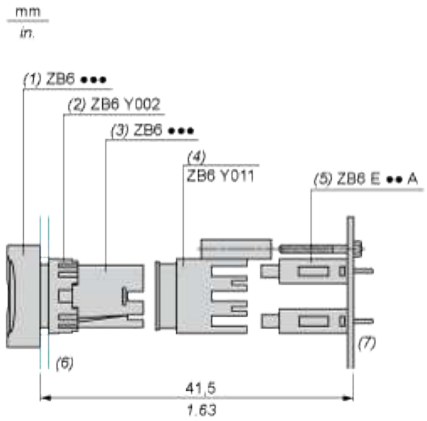

(1) Head
(2) Nut
(3) Body
(4) Body bracket
(5) Contact block
(6) Panel
(7) Printed circuit