SOLIDWORKS GENERATED DRAWING, DO NOT CHANGE BY HAND.

REV.	ECN. NO.	APPD.
A	BC-16-0033657	NICK LIN
B	BC-17-0064523	NICK LIN

NOTES:
1. ALL DIMENSIONS ARE IN MILLIMETERS.
2. DIMENSIONING AND TOLERANCING PER ASME Y14.5M-1994.
3. MATERIAL: PC-ABS, BLACK.
4. HARMFUL MATERIAL CONTROL PLEASE FOLLOW DOC. NO. "EPI12".
5. PLEASE CONTACT FOXCONN SALES REPRESENTATIVE TO VERIFY PRODUCT DETAIL AND AVAILABILITY.

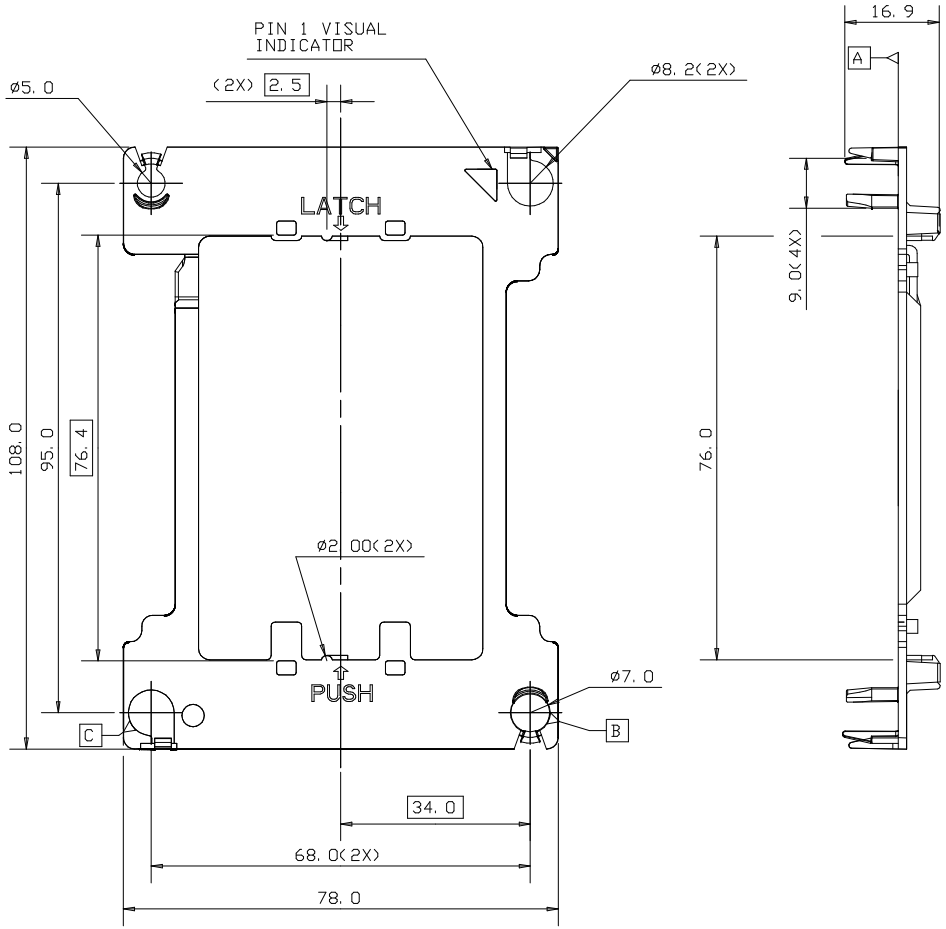

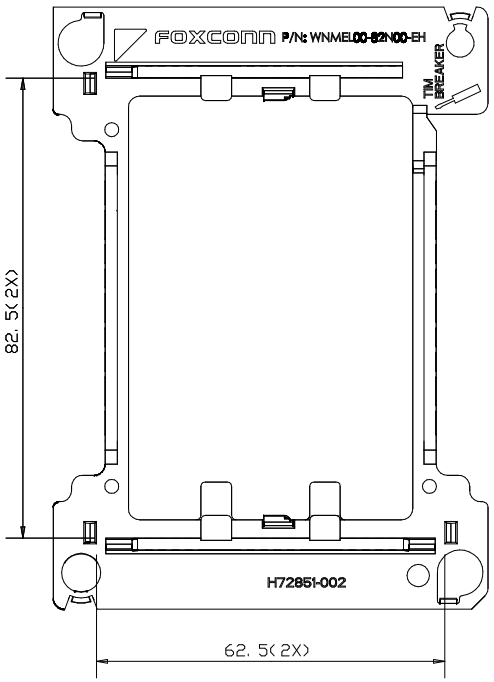

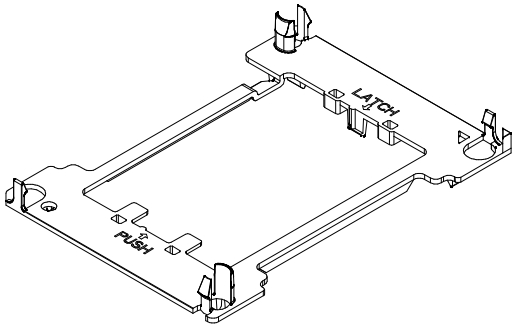

(FOR REFERENCE ONLY)

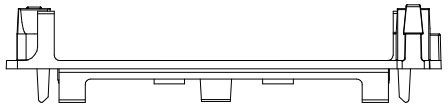

X. ±	X.° ± 1°	UNITS mm	NAME(INTENDED USE) LGA3647 SKX-EP BOLSTER	FOXCONN® FOXCONN INTERCONNECT TECHNOLOGY LIMITED.
.X± 0.3	.X°±	MAT'L 3	PART NO.(INTENDED USE) WNMEL00-82N00-EH	CLASS: □CONFIDENTIAL □SECRET ■GENERAL
.XX± 0.13	.XX°±	FINISH	APPD: Simon Szu	TITLE: SKX-EP NARROW NON-FABRIC CPU CARRIER
.XXX±	.XXX°±	Q'TY	CHKD: Mac Peng	DWG NO.: 351-0000-1352
THESE DRAWINGS AND SPECIFICATIONS ARE THE PROPERTY OF FOXCONN INTERCONNECT TECHNOLOGY LIMITED AND SHALL NOT BE REPRODUCED COPIED OR USED IN ANY MANNER WITHOUT THE PRIOR WRITTEN CONSENT OF FOXCONN INTERCONNECT TECHNOLOGY LIMITED.			DR: Daryl Tan 4/13'17	SCALE 1:1 / SHEET 1/1 / REV. B

PART NUMBER	WNMEL00-82N00-EH

FK2B00065A