FO-50360-L

CW-B9736

REV	DOCUMENT	CHANGED BY	CHECK
2	202161	TSM 25JAN01	SAV
3	202594	TSM 19MAR01	SAV
4	206869	CSL 18NOV02	SAV
5	207443	TSM 17FEB03	SAV

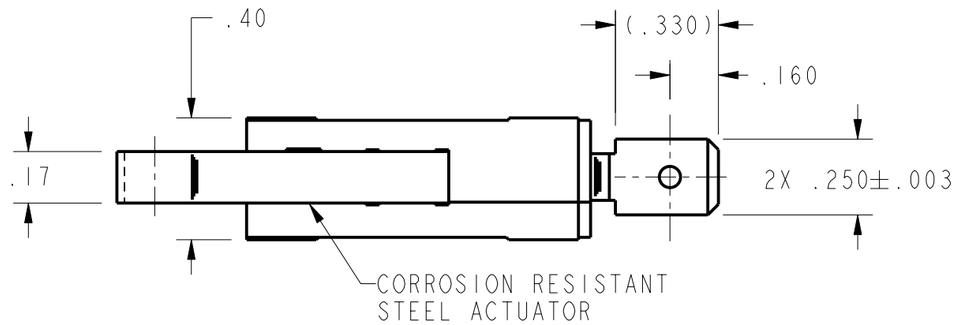

NOTES
1 - SILVER PLATED TERMINALS
2 - RESTRICTED LISTING
3 - MARK SWITCH WITH CUSTOMER PART NUMBER 40109A

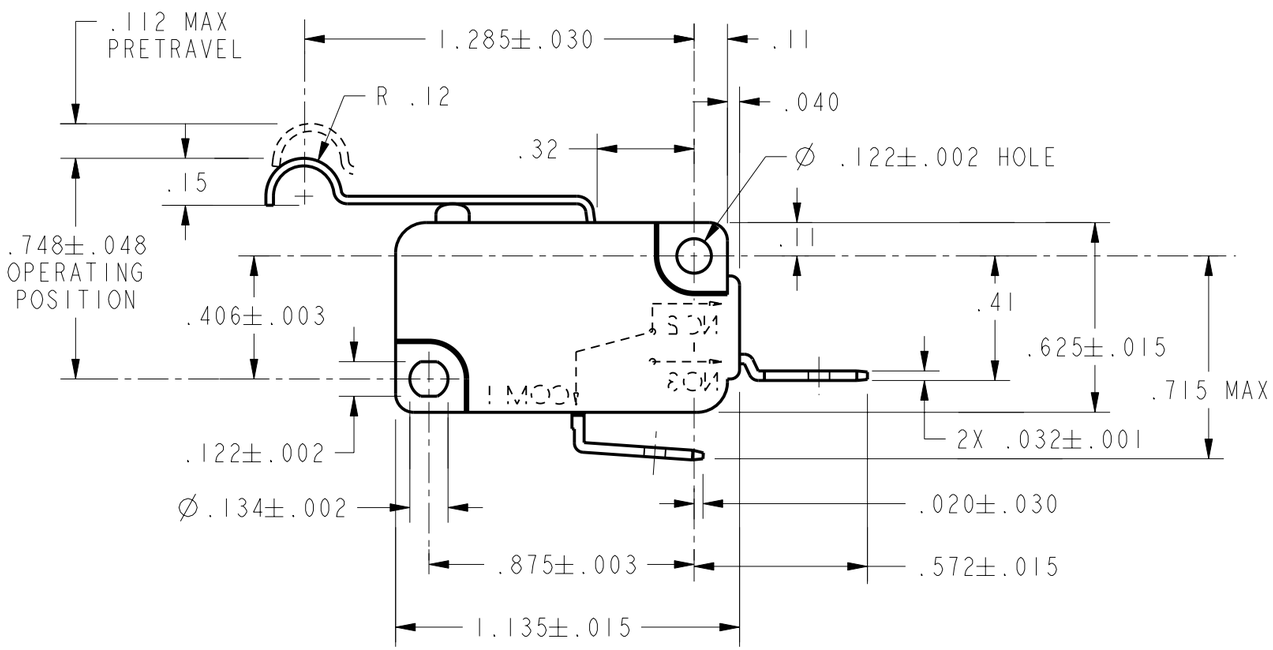

CHARACTERISTICS	
OPERATING FORCE	136 GRAMS MAX
RELEASE FORCE	7 GRAMS MIN
DIFFERENTIAL TRAVEL	.025 MAX
OVERTRAVEL	.064 MIN
RELEASE TRAVEL	.015 MIN

ELECTRICAL DATA

CONTACT ARRANGEMENT
S P N O

25A, 277 VAC

20 (5) ~ 250
T85 1E5 µ

UNLESS OTHERWISE SPECIFIED TOLERANCES ARE: [X] US(inch) CUSTOMARY [ ] SI(mm) METRIC

NO PLACE	X	±.040	±1
ONE PLACE	.X	±.030	±0.4
TWO PLACE	.XX	±.015	±0.15
THREE PLACE	.XXX	±.005	±
ANGLES		±	±

RAW MATERIAL-COMMERCIAL STANDARD

THIRD ANGLE PROJECTION

DRAWN	TSM	25JAN01
CHECK	SAV	25JAN01

THIS DRAWING COVERS A PROPRIETARY ITEM AND IS THE PROPERTY OF HONEYWELL. THIS DRAWING IS NOT TO BE COPIED OR USED WITHOUT THE PERMISSION OF HONEYWELL.

DIMENSIONS ARE TO BE MET BEFORE PROTECTIVE COATINGS ARE APPLIED

PTC 2D | ASME Y14.5M-1994

Honeywell

TITLE
SWITCH, BASIC

SIZE	DWG TYPE	DRAWING NAME	REV
B	1	V7-1Z20E9-263-1	5

SCALE 2 : 1 | WEIGHT | SHEET 1 OF 1