APEM

SWITCHES **2015/2016**

PANEL SWITCHES | **PCB SWITCHES**

A WORLD OF
SWITCHING CAPABILITIES

Index

RoHS compliant

By series

AS	D-19
AV	B2-76
A01	G-5
A1	G-4
A02	G-15
A03	G-24
B	I-3
CG	B2-120
CP	B2-125
CR36	F-2
CR65	F-4
CSG *New!*	I-14
DA	F-10
DP	F-9
DS	F-7
D162	C-2
ES	G-25
FM	D-30
FP 24 mm	B2-145
FP 30 mm *New!*	B2-150
G	E-8
IA	B1-85
IB-IS	B1-25
IC	B1-2
IF	B1-88
IH	B1-29
IKE	F-14
IKH	F-16
IKN	F-11
IL	B1-6
IM	B1-11
IP	B1-15
IQ	B1-35
IR	B1-66
IT	*See website*
IZ	B1-48
KG	D-61
KI	D-59
KL	D-50
KR	D-41
LPI	B2-161
MP	B2-155
MSG *New!*	I-10
MT	D-22
NK	E-2
P36	F-2
PBA	B2-129
PHAP33	C-3
PHAP40	B2-20
PT65	F-4
Q	I-2
S (rocker)	D-9
S (toggle) and SF	A-12
SP	B2-22
SR	D-9
TG	E-5
TG SMT	E-3
TL	A-6
TL SMT	A-4
TP	B2-6
TP SMT	B2-4
TR	D-4
TR SMT	D-2
ZL	A-2
ZP	B2-2
1000	A-79
10400	B2-42
10600	A-54
11000	A-57
1200	B2-107
1200M	B2-111
12000	A-65
12000X778	A-72
13000	B2-44
13000X778	B2-52
1400N	B2-114
1500	*See website*
1600/1700	*See website*
18000	B2-67
21000N	*See website*
25000N	E-14
2600	D-33
3500	A-96
3600NF	A-101
4400	A-82
4600	A-82
4700-4800	B2-117
5000	A-21
5100	A-33
5100Z	A-35
5200	A-30
5200MIWR	A-36
5200W	A-37
5200WW	A-39
5200Y	A-41
5200Z	A-34
5300	A-33
5400	A-32
5400W	A-38
5400WW	A-40
5500	A-27
55000 VDE	A-51
5600	A-25
5600M	A-28
5700	A-27
57000 VDE	D-26
5900	A-32
5900Z	A-35
660	A-94
600H	A-88
600NH	A-93
6000	A-104
7000	D-24
8000	B2-28
9100-9200-9500	B2-12
9400-9600	B2-34
Switch guards	I-4
Sealing boots	H-2
Custom products	J-2

APEM

A world of switching capabilities

APEM is a worldwide manufacturer of professional switches, joysticks, switch panels and LED indicators.

A switch specialist since its creation, the company sells products to multiple industrial markets including: instrumentation, medical, security, communications, industrial automation, military and transport.

APEM serves more than 20 000 customers, including international industrial groups, directly or through its sales network of 7 subsidiaries and 130 distributors and agents.

From raw material transformation to finished products – through the design and production of tooling – APEM controls all phases of production in its switch manufacturing plants, located in France, the UK, Tunisia, China and the US.

APEM has a strong reputation for quality, confirmed by the ISO 9001 certification, 2008 version. Our products are designed and produced in accordance with quality standards and environmental requirements.

IN THE CATALOGUE

In this catalogue you will find more than 15 000 possible part numbers of switches with low or high current ratings, generally classified by actuator type. New products have been added.

These configurations highlight our basic offering of standard models and options, which are continuously supplemented to satisfy our customers' special requests.

Product selection guides will help you select the most appropriate switch series for your application.

General technical information and a glossary are available on the last pages.

CUSTOM PRODUCTS

APEM's experienced switch design team, advanced development tools and vertical integration enable the company to develop products beyond conventional switches. Our solutions range from special actuators or terminals to innovative products developed entirely to customer's specifications. The highest level of integration is achieved with modules combining several technologies to offer added value and reduced cost.

Some examples are shown in the dedicated section.

Contents

RoHS compliant

New products, Selection Guides sections A to G 5 to 15
Approvals, Production process 16 to 19

TOGGLE SWITCHES — A

ZL Tiny, metal bushing A-2
SMT TL Tiny, SMT, washable A-4
TL Tiny, washable A-6
S and SF Miniature, washable A-12
5000 Miniature, the widest range (includes 55000) A-21
21000N See website
10600 Professional min., bushing Ø 10 (.393) . A-54
11000 Professional miniature, bushing Ø 6,35 (1/4) A-57
12000 Professional miniature, bushing Ø 11,9 (15/32) A-65
12000X778 High performance miniature, bushing Ø 11,9 (15/32) A-72
1000 Industrial, metal lever, economy range. A-79
1500 See website
1600/1700 See website
4600/4400 Industrial, insulated or metal lever A-82
600H Industrial, metal lever A-88
600NH Industrial, insulated lever A-93
660 Industrial, metal lever, four pole A-94
3500 High performance industrial, environmentally sealed. A-96
3600NF Industrial, sealed for outdoor applications. A-101
6000 Industrial for military applications . . . A-104

PUSHBUTTON SWITCHES - "I" RANGE — B1

IC Miniature for harsh environments, short case, momentary B1-2
IL Miniature, sealed, for thick panels, momentary, illuminated or not B1-6
IM Miniature, sealed, snap-action, mom. B1-11
IP Miniature for harsh environments, mom. or latching, illuminated or not B1-15
IB/IS Miniature, sealed, momentary B1-25
IH Miniature, hall effect, mom. or linear B1-29
IQ Miniature, sealed, snap-in mounting, mom. or latching, illuminated or not . . B1-35
IZ Miniature, rear mount, sealed, mom. or latching, illuminated or not B1-48
IR Miniature, sealed, mom. or latching, illuminated or not. B1-66
IA Miniature, low profile, for harsh env. . B1-85
"I" range sealing features B1-87
IF Miniature, sealed, mom., large actuator B1-88

PUSHBUTTON SWITCHES — B2

ZP Tiny, metal bushing, momentary B2-2
SMT TP Tiny, SMT, washable, momentary B2-4
TP Tiny, washable, momentary B2-6
9100/200/500 Subminiature, momentary B2-12
PHAP40 Miniature, momentary or latching . . . B2-20
SP Miniature, washable, snap-action, mom. B2-22
8000 Miniature, mom. or alternate action. . B2-28
9400-9600 Miniature, mom. or alternate action . B2-34
10400 Professional miniature, bushing Ø 10, momentary B2-42
13000 Professional miniature, quick-break momentary B2-44
13000X778 High performance miniature, mom. or alternate B2-52
18000 Miniature, snap-action momentary . . B2-63
IT See website
AV Industrial, anti-vandal and security, mom. or latching. B2-76
1200 Industrial, mom., round plunger B2-107
1200M/MR Robust industrial, momentary, round metal plunger B2-111
1400N Industrial, mom., snap-in mounting, square plunger B2-114
4700/4800 Industrial, mom. or alternate action B2-117
CG Capacitive for underlay applications B2-120
CP Capacitive, bushing Ø 16, 19 or 22. . . B2-125
PBA Piezo, bushing Ø 16, 19 or 22 . . . . . B2-129
FP Fully illuminated actuator, momentary or . . latching ***New : Ø 30 models!*** B2-145
MP Two-step, SIL2 safety level. B2-155
LPI Tactile, with large actuator B2-161

RoHS compliant

Contents

TACT SWITCHES C

D162 SMT C-2
PHAP33 SMT C-3
PHAP33 Through-hole C-12

ROCKER SWITCHES D

SMT TR Tiny, SMT, washable D-2
TR Tiny, washable D-4
S and SR Miniature, washable D-9
AS Miniature, snap-in D-19
MT Sealed selector switch D-22
7000 Miniature (includes 57000) D-24
FM Industrial, snap-in. D-30
2600 Industrial, illuminated or not. D-33
KR Industrial, sealed, unique rocker D-41
KL Industrial, locking, sealed D-50
KI LED indicators, sealed D-59
KG Industrial, sealed, illum. or not D-61
K range Symbols and accessories D-66

SLIDE SWITCHES E

NK Subminiature E-2
SMT TG Tiny, SMT, washable E-3
TG Tiny, standard or washable. E-5
G Miniature, telecom grade E-8
25000N Miniature, professional E-14

DIP AND CODED ROTARY SWITCHES F

P36/CR36 Low profile coded rotary, SMT or through-hole F-2
PT65/CR65 Coded rotary, through-hole. F-4
DS/DSR Standard DIP F-7
DP/DPL Piano DIP F-9
DA Right angle DIP F-10
IKN Low profile DIP, SMT or through-hole. . F-11
IKD DIP, SMT or through-hole F-14
IKH Half pitch DIP, SMT, very low profile . . . F-16

INDUSTRIAL CONTROLS G

Distinctive features and specifications G-2
A1 Engraved aluminium flush mounting pushbuttons & indicators - Panel cut-out Ø 22 (.866) . . . G-4
A01 Pushbutton, rotary lever, keylock & emergency stop switches - Indicators - Panel cut-out Ø 16 (.630) G-5
A02 Pushbutton, rotary lever, keylock & emergency stop switches - Indicators - Panel cut-out Ø 22 (.866) or 30 (1.181). G-15
A03 Compact pushbuttons and indicators Panel cut-out Ø 22 (.866) or 30 (1.181). . . . G-24
ES Heavy duty emergency stop G-25

Contents

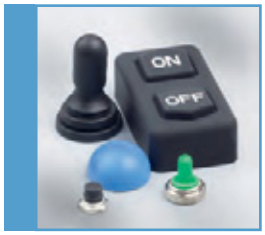

SEALING BOOTS H

For toggle, pushbutton and rocker switches . . . . . H 2

INDICATORS / ACCESSORIES / HARDWARE I

Q Panel mount LED indicators up to 220VAC I-2

B 15A and 25A terminal posts I-3

20 to 500 Switch guards for 12000-3500-600H & 6000 series I-4

MSG *New!* Rugged switch guards for 12000-3500 600H & 6000 series I-10

CSG *New!* Thermoplastic switch guards for 5000M and 600H series I-14

Hardware I-18

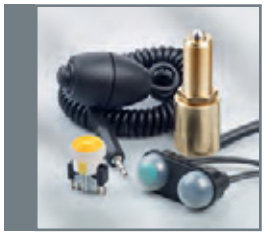

CUSTOM PRODUCTS J

Available for sale or customer exclusivity . . . . . J 2

TECHNICAL INFORMATION

RoHS compliance, contacts and ratings, 3-way switches — I to III

Switches for peak currents, degrees of protection, surface mount — IV to VI

GLOSSARY — VII to IX

ADDRESSES — X

OTHER APEM PRODUCT CATALOGUES — Inside back cover

New products

FP 30 mm series

- **Full actuator or symbol illumination**
- Suited for integrated designs
- Large but lightweight
- Pad printed or laser etched symbols
- Snap-in and threaded bushing models

Page B2-150

MSG series

- **Rugged switch guards for switch series 12000, 3500, 600H and 6000**
- Modern, patented design
- Robust
- For harsh environments
- Anti-tamper wire seal hole as standard

Page I-10

CSG series

- **Thermoplastic switch guards for switch series 5000M and 600H**
- Modern, patented design
- Lightweight
- Anti-tamper wire seal hole as standard

Page I-14

Selection guide - Section A
Toggle switches

Series	ZL	SMT TL	TL	S and SF	5000	21000N	10600	11000	12000	12000X778
Page	A-2	A-4	A-6	A-12	A-21	See website	A-54	A-57	A-65	A-72
Poles	1	1	1,2	1,2	1,2,3,4	1,2	1,2	1,2,3,4	2,3,4	2,3,4
Maximum ratings	500mA 48VDC	0,4VA 20V AC/DC	0,5A 48V AC/DC	(2A 250VAC)* 4A 30VDC	(3A 250VAC)* 4A 30VDC	4A 30VDC	3A 24VDC	4A 30VDC	4A 30VDC	4A 30VDC
Bushing dimension										
	X									
Ø6 (.236)					X					
Ø6,35 (1/4)				X	X	X		X		
Ø10 (.393)							X			
Ø11,9 (15/32)					X				X	X
Mounting options										
Horizontal SMT		X								
Vertical right angle SMT		X								
Vertical - Through hole	X		X	X	X			X	X	X
Horizontal - Through hole			X	X	X	X		X		
Vert. right angle Through hole			X	X	X					
Panel	X			X	X	X	X	X	X	X
Terminal options										
PCB	X	X	X	X	X	X		X	X	X
Solder lugs	X			X	X		X	X	X	X
Quick-connect					X					
Wire wrap			X		X					
Sealing	No	Process sealed	Process sealed	Process sealed	Optional	Optional	No	Optional	Optional	IP67

Series	1000	1500	1600/1700	4600/4400	600H	600NH	660	3500	3600NF	6000
Page	A-79	See website	See website	A-82	A-88	A-93	A-94	A-96	A-101	A-104
Poles	1	1	1	1,2,3	1,2,3	1,2,3	4	1,2	1,2	1,2,3,4
Maximum ratings	6A 30VDC	(6A 250VAC)* 5A 12VDC	4A 30VDC	(4A 250VAC)*	(15A 250VAC)* 10A 24VDC	(15A 250VAC)* 10A 24VDC	10A 30VDC	15A 28VDC	(6A 250VAC)* 15A 28VDC	6,5A 30VDC
Bushing dimension										
Ø11,9 (15/32)								X		X
Ø12 (.472)	X	X	X	X	X	X	X		X	
Mounting options										
Vertical Through hole				X						
Panel	X	X	X	X	X	X	X	X	X	X
Terminal options										
PCB				X						
Solder lugs	X	X	X	X	X	X	X	X	X	X
Quick-connect	X	X	X	X	X	X	X	X	X	X
Screw	X		X		X	X	X	X	X	X
Sealing	No	No	No	No	Optional	No	Optional	IP67, IP69K	IP67	Optional

( )* See applicable approvals

Selection guide - Section B1
«I» range

Series	**IC**	**IL**	**IM**	**IP** mom. & latching	**IB-IS**	**IHS** hall effect	**IHL** hall effect	**IQ** momentary
Page	B1-2	B1-6	B1-11	B1-15	B1-25	B1-29	B1-32	B1-35
Poles	1	1	1	1	1	1 NPN	1	1
Maximum ratings	5A 28VDC	2A 24VDC	3A 28VDC	5A 28VDC 4A 12VDC	100mA 24VDC	5mA 24VDC	1,25mA 4,5VDC	5A 28VDC
Illuminated		X		X				X
Bushing dimension								
Ø12 (.472)	X	X	X	X	X	X	X	
Ø16 (.629)								X
Mounting options								
Panel	X	X	X	X	X	X	X	
Snap-in					X			X
Terminal options								
PCB	X	X	X	X	X			X
Solder lugs	X	X		X	X			X
Quick-connect	X		X	X	X			X
Screw								X
Flying leads	X	X		X		X	X	X
Sealing	IP67	IP67	IP67	IP67	IP54 or IP67	IP67	IP67	IP54

Series	**IQ** latching	**IZ** metal	**IZ** plastic	**IR** mom. standard	**IR** mom. microswitch	**IR** latching	**IA**	**IF**
Page	B1-42	B1-48	B1-58	B1-66	B1-73	B1-79	B1-85	B1-88
Poles	1	1	1	1	1	1	1	1
Maximum ratings	4A 12VDC	4A 48VDC 100mA 24VDC	4A 48VDC 100mA 24VDC	5A 28VDC	5A 250VAC	4A 12VDC	2A 24VDC	100mA 48VDC
Illuminated	X	X	X	X	X	X		
Bushing dimension								
Ø12 (.472)								
Ø16 (.629)	X	X	X	X	X	X	X	X
Mounting options								
Panel		X	X	X	X	X	X	X
Snap-in	X							X
Terminal options								
PCB	X	X	X	X		X		
Solder lugs	X	X	X	X		X		
Quick-connect	X	X	X	X	X	X		X
Screw		X	X	X				
Flying leads	X	X	X	X		X	X	
Sealing	IP54	IP67	IP67	IP67	IP67	IP67	IP67	IP67

Selection guide - Section B2
Pushbutton switches

Series	**ZP**	**SMT TP**	**TP**	**9500**	**PHAP40**	**SP**	**8000**	**9400/9600**
Page	**B2-2**	**B2-4**	**B2-6**	**B2-12**	**B2-20**	**B2-22**	**B2-28**	**B2-34**
Poles	1	1	1,2	1	2	1,2	1,2	1
Maximum ratings	500mA 48VDC	0,4VA 20V AC/DC	0,5A 48V AC/DC	100mA 30VDC	100mA 30VDC	1A 30VDC	(3A 250VAC)* 4A 30VDC	1A 30VDC
Bushing dimension								
Ø4 (.157)				X				
Ø4,83 (10-48)	X							
Ø6,35 (1/4)						X	X	X
Ø11,9 (15/32)							X	
Ø16 (.629)								X
Mounting options								
Horizontal SMT		X						
Vertical right angle SMT		X						
Vertical Through hole	X		X	X	X	X	X	X
Horizontal Through hole			X			X	X	
Vert. right angle Thr. hole			X	X		X		
Panel	X			X		X	X	X
Terminal options								
PCB	X	X	X	X	X	X	X	X
Solder lugs	X			X			X	X
Quick-connect								X
Sealing	No	Process	Process	Optional	No	Process	Optional	Optional

( )* See applicable approvals								
Series	**10400**	**13000**	**13000X778**	**18000**	**IT**	**1200**	**1400**	**4700/4800**
Page	**B2-42**	**B2-44**	**B2-52**	**B2-63**	**see website**	**B2-107**	**B-114**	**B-117**
Poles	1,2	1,2	2,3	1,2	2	1	1	1,2
Maximum ratings	3A 24VDC	4A 30VDC (2A 250VAC)*	4A 28VDC	7A 30VDC	1,5A 250VAC	(4A 250VAC)* 4A 24VDC	6A 12VDC	(3A 250VAC)*
Bushing dimension								
Ø6,35 (1/4)		X		X				
Ø10 (.393)	X							
Ø11,9 (15/32)		X	X					
Ø 12 (.472)						X		X
Mounting options								
Vertical Through hole		X	X	X			X	X
Horizontal Through hole		X		X	X			
Vert. right angle Through hole				X				
Panel	X	X	X	X		X	X	X
Snap-in				X			X	
Terminal options								
PCB		X	X	X				
Solder lugs	X	X	X	X		X	X	X
Quick-connect						X	X	X
Screw						X		
Sealing	No	Optional	IP67	No	No	No	No	No

Selection guide - Section B2
Pushbutton switches

				New!				
Series	**CG**	**CP**	**PBA**	**FP**	**MP**	**LPI**		
Page	**B2-120**	**B2-125**	**B2-129**	**B2-145**	**B2-155**	**B2-161**		
Poles	1 NPN	1 NPN	1	1,2	1,2	1		
Maximum ratings	200mA 24VDC	200mA 24VDC	1A 24VDC	200mA 12VDC	20mA 5VDC	5A 12VDC 100mA 12VDC		
Illuminated	X	X	X	X		X		
Bushing dimension								
Ø15,20 (.598)					X			
Ø16 (.629)		X	X					
Ø19 (.748)		X	X					
Ø22 (.866)		X	X					
Ø24 (.944) and 30 (1.181)				X X				
Ø38 (1.496)						X		
Ø44 (1.732)						X		
Mounting options								
Panel	X	X	X	X	X	X		
Terminal options								
Solder lugs				X				
Screw						X		
Flying leads		X	X					
Cable		X	X	X				
Connector	X	X			X			
Sealing	N/A	IP68, IP69K	IP68,IP69K	IP69K (Ø24)	IP68	IP53		

«I» range selection guide : page 7
AV series selection guide : page 10

Selection guide - Section B2
AV series

Page	**B2-78**	**B2-79**	**B2-80**	**B2-81**	**B2-83**	**B2-86**	**B2-87, B2-100**	**B2-89**
General specifications								
Anti-vandal (IK08/IK10)	X	X						
Security			X	X	X	X	X	X
Approval (optional)	UL/CSA	UL/CSA			UL/CSA			
Sealing	Up to IP65	Up to IP65	Up to IP65	Up to IP65	Up to IP65	IP65, IP69K	Up to IP67	Up to IP65
Illumination							X	X
Marking					X			
Electrical specifications								
Maximum ratings	2A 48VDC (4A 250VAC)*	2A 48VDC (4A 250VAC)*	0,2A 48VDC	1A 24VDC	2A 48VDC (4A 250VAC)*	5A 15VDC 5A 250VAC	1A 30VDC	2A 48VDC
Momentary (NO)	X	X			X			
Momentary (NO) tactile			X					
Momentary (NO/NC)						X	X	
Latching				X				X
Diameter and shape								
Ø 16 (.629) Flat			AV063	AV061				
Curved			AV163	AV161				
Ø 19 (.748) Flat	AV09				AV09	AV19LP	AV9	AV09..EA
Curved	AV19				AV19	AV19LB		AV19..EA
Ø 22 (.866) Flat		AV03					AV3	
Curved		AV02						

( )* See applicable approvals								
Page	**B2-91**	**B2-93, B2-95**	**B2-97**	**B2-98**	**B2-98**	**B2-102**	**B2-104**	**B2-106**
General specifications								
Security	X	X	X	X	X	X	X	X
Approval (optional)			UL/CSA					
Sealing	Up to IP65	Up to IP67,IP69K	Up to IP65	Up to IP65	Up to IP65	Up to IP65	IP¨65	IP65
Illumination	X	X				X		
Marking	X	X		X	X			
Electrical specifications								
Maximum ratings	50mA 24VDC	50mA 24VDC	2A 48VDC (4A 250VAC)*	2A 250VAC	3(1,5)A 250VAC	2A 48VDC	5A 250VAC	5A 250VAC
Momentary (NO)			X					
Momentary (NC)				X				
Momentary (NO) tactile	X	X						
Momentary (NO/NC)							X	X
Latching						X		
Alternate action					X			
Diameter and shape								
Ø 19 (.748) Flat	AV09C7	AV9S						
Curved	AV19C7							
Ø 22 (.866) Flat		AV3S	AV03	AV031200	AV044700	AV03..EA	AV22LP	
Curved			AV02	AV021200		AV02..EA	AV22LB	AV22PNA
Ø 24 (.944) Flat							AV24LP	
Curved							AV24LB	
Concave							AV24LC	

Selection guide - Section C
Tact switches

		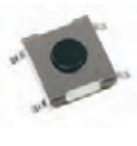	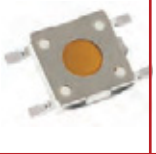					
Series	**D162**	**PHAP3390 PHAP3391**	**PHAP3380**	**PHAP3371 PHAP3372 PHAP3373 PHAP3374**	**PHAP3378**	**PHAP3361**	**PHAP3355**	**PHAP3366 PHAP3365**
Page	**C 2**	**C-4**	**C-5**	**C-6**	**C-8**	**C-9**	**C-9**	**C-10**
Type (SMT/Through hole)	SMT	SMT	SMT	SMT	SMT	SMT	SMT	SMT
Contact	N.O.	N.O.	N.O.	N.O.	N.C.	N.O.	N.O.	N.O.
Case format	6x6mm	4,2x4,2mm	6x6mm	6,2x6,2mm	7,6x7,6mm	6x3,5mm	6x3,5mm	6,1x3,7mm
Button height from PCB	3,96mm	1,5mm	1,6mm	2,6 to 3,4mm	4,3mm	4,3 and 5mm	1,8mm	2,5mm
Grounding tab	Yes	-	Yes	Yes	-	-	Yes	-
Packaging	T/R	T/R - Bags	T/R - Bags	T/R - Bags	T/R	T/R - Bags	T/R	T/R
Maximum ratings	50mA 12VDC	50mA 12VDC	50mA 12VDC	50mA 12VDC	50mA 12VDC	50mA 12VDC	50mA 12VDC	50mA 12VDC
Mounting options								
SMT	X	X	X	X	X	X		X
Right angle SMT							X	

Series	**PHAP3368**	**PHAP3305**	**PHAP3362 PHAP3363**	**PHAP3301 to PHAP3308**	**PHAP3307**	**PHAP3350 PHAP3351 PHAP3352**	**PHAP3353**	**PHAP3320 PHAP3321**
Page	**C-11**	**C-11**	**C-12**	**C-13**	**C-14**	**C-15**	**C-15**	**C-16**
Type (SMT/Through hole)	SMT	SMT	Through hole	Through hole	Through hole	Through hole	Through hole	Through hole
Contact	N.O.	N.O.	N.O.	N.O.	N.O.	N.O.	N.O.	N.O.
Case format	6x6mm	6x6mm	6x3,5mm	6x6mm	6,1x6,1mm	7,2x7,2mm	10x10mm	12x12mm
Button height from PCB	4,3 to 13mm	5,9mm	4,3 and 5mm	4,3 to 13mm	4,3 to 7mm	4,35 to 13mm	13mm	4,3 to 12mm
Grounding tab	-	Yes	-	Yes	-	Yes	-	Yes
Caps	Yes	-	-	Yes	-	-	-	Yes
Packaging	T/R - Bags	T/R	Bags	Bags	Tape	Bags	Bags	Bags
Process sealed						Yes	Yes	
Maximum ratings	50mA 12VDC	50mA 12VDC	50mA 12VDC	50mA 12VDC	50mA 12VDC	50mA 12VDC	50mA 12VDC	50mA 12VDC
Mounting options								
SMT	X							
Right angle SMT		X						
Through hole			X	X	X	X	X	X
Right angle Through hole			X	X		X		

Selection guide - Section D
Rocker and paddle switches

Series	**SMT TR**	**TR**	**S-SR**	**AS**	**MT**	**7000**	**FM**
Page	**D-2**	**D-4**	**D-9**	**D-19**	**D22**	**D-24**	**D-30**
Poles	1	1,2	1,2	1	1	1,2	1
Maximum ratings	0,4VA 20V AC/DC	0,5A 48V AC/DC	(2A 250VAC)* 4A 30VDC	(2A 250VAC)*	4A 30VDC	(3A 250VAC)* 4A 30VDC	(10A 250VAC)*
Illuminated							X
Mounting options							
Horizontal SMT	X						
Vertical Through hole		X	X	X	X	X	X
Horizontal Through hole		X	X			X	
Vert. right angle TH		X	X			X	
Snap-in			X	X		X	X
Rear mounting			X			X	
Panel cut-out				18,65X8,9	Ø 17,65		19,2x12,9
Terminal options							
PCB	X	X	X	X	X	X	X
Solder lugs			X	X	X	X	X
Quick-connect							X
Sealing	Process sealed	Process sealed	Process sealed	No	No	No	Optional boot

( )* See applicable approvals

Series	**2600**	**KR**	**KL**	**KI**	**KG**
Page	**D-33**	**D-41**	**D-50**	**D-59**	**D-61**
Poles	1,2	1,2	1,2		1,2
Maximum ratings	(16A 250VAC)*	10A 24VDC	10A 24VDC	24VDC	(12A 250VAC)* 15A 12VDC
Illuminated	X	X	X	X	X
Mounting options					
Snap-in	X	X	X	X	X
Panel cut-out	30 x 22	36,8 X 21,08	36,8 X 21,08	36,8 X 21,08	36,8 X 21,08
Terminal options					
Solder lugs	X	X	X	X	X
Quick-connect	X	X	X	X	X
Screw	X	X	X		X
Sealing	Optional boot	IP68	IP68	IP68	IP65

Selection guide - Section E
Slide switches

Series	**NK**	**SMT TG**	**TG**	**G**	**25000N**
Page	**E-2**	**E-3**	**E-5**	**E-8**	**E-14**
Poles	1	1	1	1,2	1,2
Maximum ratings	500mA 12VDC	0,4VA 20V AC/DC	0,5A 48V AC/DC	3A 30VDC	(2A 250VAC)* 1A 30VDC
Mounting options					
Horizontal SMT		X			
Vertical Through hole	X		X	X	X
Horizontal Through hole	X		X	X	X
Vert. right angle TH				X	
Panel				X	
Terminal options					
PCB	X	X	X	X	X
Solder lugs				X	
Sealing	No	Process sealed	Process sealed	No	No

( )* See applicable approvals

Selection guide - Section F
DIP and coded rotary switches

							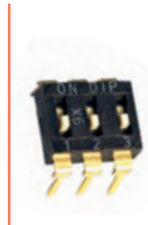	
Series	**P36 (CR36)**	**PT65 (CR65)**	**NDS-NDSR**	**DP-DPL**	**DA**	**IKN**	**IKD**	**IKH**
Type	Coded rotary		DIP					
Page	**F-2**	**F-4**	**F-7**	**F-9**	**F-10**	**F-11**	**F-14**	**F-16**
Number of positions	10 & 16	10 & 16	1-12 (except 11)	2-12 (except 11)	2-12 (except 11)	2-8 (even only)	1-12 (except 11)	2-10 (even only)
Maximum ratings	400mA 24VDC	400mA 24VDC	25mA 24VDC	100mA 50VDC	100mA 50VDC	100mA 48VDC	25mA 24VDC	100mA 50VDC
Process Sealed	Yes	Yes	W. optional tape	W. optional tape	W. optional tape	W. optional tape	Yes	W. optional tape
Profile off PCB	Through hole : 3,65mm SMT: 3,85mm	6,5mm	5,85mm	10,3mm	9,9mm	Through hole: 4mm SMT: 2,85mm	3 mm	1,6mm
Mounting options								
SMT	X					X	X	X
Through hole	X	X	X	X	X	X	X	
Right angle Through hole		X						

Selection guide - Section G
Industrial controls

Series	**A1**	**A01**	**A01**	**A01**	**A01**	**A01ES**	**A01**
Type	Pushbutton	Pushbutton	Indicator	Rotary	Keylock	Emergency Stop	Mushroom Head Pushbutton
Page	**G-4**	**G-5**	**G-6**	**G-7**	**G-8**	**G-9**	**G-11**
Poles	1,2,3,4	1,2,3,4		1,2,3,4	1,2,3,4	1,2	1,2,3,4
Sealing	IP65	IP65	IP65	IP65	IP65	IP65	IP65
Back panel sealing	Option	Option	Option	Option	Option	Option	Option
Illuminated	Yes	Yes	Yes	No	No	No	No
Maximum ratings	6A 250VAC 6A 12VDC	6A 250VAC 6A 12VDC	N/A	6A 250VAC 6A 12VDC	6A 250VAC 6A 12VDC	1,5A 250VAC AC-15	6A 250VAC 6A 12VDC
Panel cut-out							
Ø16mm		X	X	X	X	X	X
Ø22mm	X	X	X	X	X		X
Flush mounting	Yes	Option	Option	Option	Option	No	Option
Terminal options							
Solder lugs	X	X	X	X	X	X	X
Quick-connect	X	X	X	X	X	X	X
PCB Mounting	Option	Option	Option	Option	Option	Option	Option

Series	**A02**	**A02**	**A02**	**A02ES**	**A02**	**A03**	**ES**
Type	Pushbutton	Indicator	Rotary / Keylock	Emergency Stop	Mushroom Head Pushbutton	Pushbutton	Emergency Stop
Page	**G-15**	**G-18**	**G-19 - G20**	**G-21**	**G-22**	**G-24**	**G-25**
Poles	1,2,3,4,n		1,2,3,4,n	1,2	1,2,3,4	1,2,3,4	2,3
Sealing	IP65	IP65	IP65	IP65	IP65	IP65	IP65,IP67,IP69K
Back panel sealing	No	No	No	No	No	Option	No
Illuminated	Yes	Yes	No	No	No	Yes	No
Maximum ratings	16A 250VAC 12A 12VDC	16A 250VAC 12A 12VDC	16A 250VAC 12A 12VDC	2,5A 380VAC AC-15	16A 250VAC 12A 12VDC	6A 250VAC 6A 12VDC	1A 24VDC
Panel cut-out							
Ø22mm	X	X	X	X	X	X	X
Ø30mm	X	X	X			X	Ø 28mm
Flush mounting	Yes	Yes	Option	No	Option	Yes	No
Terminal options							
Solder lugs						X	X
Quick-connect	Option	Option	Option	Option	Option	X	
Screw	X	X	X	X	X		
Straight PC							X
PCB Mounting	No	No	No	No	No	Option	No

Production process

APEM, vertically integrated manufacturing

Design and development capabilities

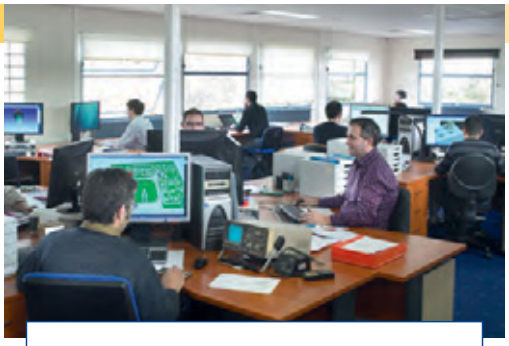

CAD/CAM stations

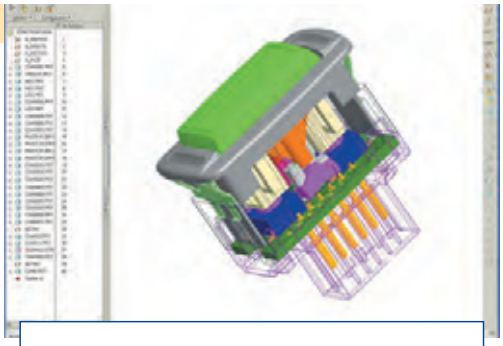

Graphic design

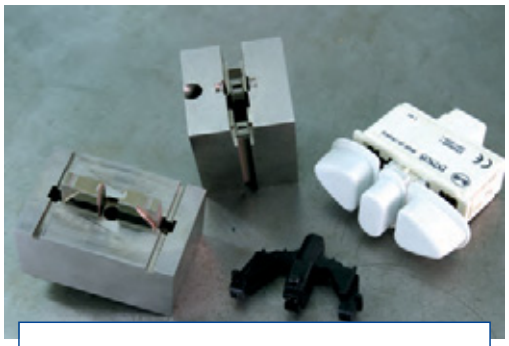

Fabrication of tooling

Qualification

Tooling and automatic assembly

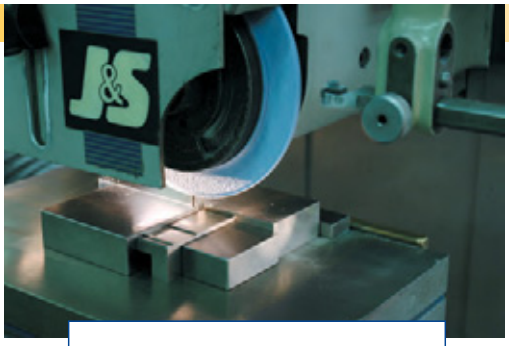

Grinding machine

Electro-erosion

Tooling

Milling

Production process

From raw material transformation to finished products, through the design and production of tooling, APEM controls all phases of production.

Switch manufacturing process

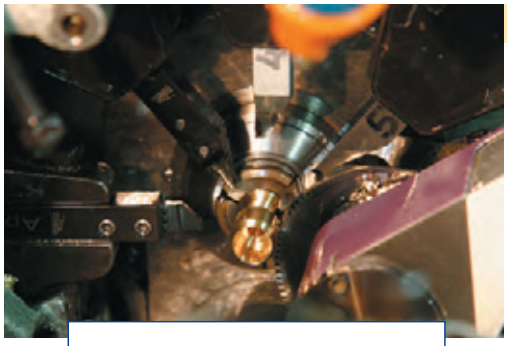

Screw machining

Stamping

Plating

Moulding

Soldering

Assembly

Marking

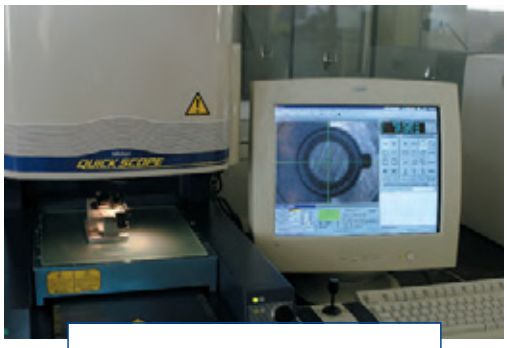

Testing

Approvals

QUALITY SYSTEM CERTIFICATES

ISO 9001- 2008 version
AFAQ No 1992/776f

FACTORIES
- Caussade (miniature switches)
- Montpezat (industrial switches)
- Montauban (membrane and specific switch panels)

EUROPEAN STANDARDS

Generic specification
CECC 96000

Intermediate specifications

Pushbutton switches
CECC 96400

CECC 96401-001
13000 series

Toggle switches
CECC 96200

Approved models
(detail specifications)

CECC 96201-007
5000 series
Std toggle switches

CECC 96201-005
11000 and 12000 series
High electrical level
Military toggle switches

CECC 96201-008
11000 and 12000 series
Low electrical level
Military toggle switches

CECC 96201-006
S series
Low electrical level
Washable toggle switches

CECC 96201-004
3500 series
High electrical level
Sealed toggle switches

See our cross reference list MCL02 for CECC models.

APEM factories and test laboratories are qualified by :

MIL DLA land and maritime letter VQ
(VQH-11-022447)
Standards MIL-DTL-3950 and MIL-DTL-83731

SNQ Service National de Qualité - No 121

LCIE Laboratoire Central des Industries Electriques

CECC-IECQ (European)- No 008-95
Standard : CECC 96000

Underwriters Laboratories

Canadian Standards Association

NF - Normes françaises

VDE - Germany

Other product qualifications

ATEX - PBA series - No INERIS08ATEXQ408

PREFERENTIAL LISTS

NATO — User code No F7507

QPL — QPL 3950 and QPL 83731

Consult factory for details of listed models.

Approvals

For our products, the approvals are usually delivered by the French agency (NF) or the German agency (VDE) according to EN 61058-1, which is recognized by all European countries.

CE All switches approved according to EN 61058-1 are compatible with CE marked equipment.

Availability : consult factory for details of approved models.

SERIES	SAFETY STANDARDS					QUALITY STD	
	USE - France NF - EN 61058-1	VDE - Germany DIN - EN61058-1	UL - U.S.A. UL 1054	CSA - Canada C22-2 N° 55		CECC (European) Ne 008-95 CECC 96000	MIL-DTL-3950 MIL-DTL-83731
	EN61058-1	EN61058-1					MIL
A01-A02		●	●	●			
AS			●	●			
AV			●	●			
FM		●	●				
IP-IB-IS			●				
IM			●				
S			●			●	
SP			●				
KG		●					
10400						●	
10600						●	
11000						●	
1200	●		●	●			
12000						●	●
13000			●			●	
1500			●				
2200			●	●			
25000N			●				
2600	●	●	●	●			
3500						●	
3600			●				
4100-4200			●	●			
4600		●	●	●			
4400		●					
4700		●	●	●			
4800		●					
5000			●	●		●	
55000		●	●	●			
57000		●	●	●			
600H	●	●	●	●			
600NH	●	●	●	●			
7000			●	●			
8000			●				

LAB TEST

APEM's laboratory is approved by the National Standard Office (LCIE) as well as Underwriters Laboratories (UL).
Qualification tests and periodical tests are conducted according to European Standard (CECC 96000), International Standards (IEC 1020, IEC 512, IEC 68...) and other safety standards like UL 1054, CSA 55, CEE 24, EN 61058-1.

CECC - IEC TYPICAL TESTS

Visual examination:	IEC 512-2 test 1a
Outline dimensions:	IEC 512-2 test 1b
Functional operation:	CECC 96000 - § 4-3-1-7
Initial contact resistance:	IEC 512-2 test 2a or 2b
Impact on actuator:	CECC 96000 § 4-3-7-1
Robustness of actuator:	CECC 96000 § 4-3-8-1
Robustness of mounting:	CECC 96000 § 4-3-8-2
Robustness of terminals:	IEC 512-8 test 16f
Mechanical endurance:	IEC 512-5 test 9a and CECC96000 § 4-3-9-1
Electrical endurance:	IEC 512-5 test 9c
Electrical overload:	IEC 512-5 test 10a
Damp heat, steady state:	IEC 512-6 test 11c
Rapid change of temperature:	IEC 512-6 test 11d
Vibration:	IEC 512-4 test 6d
Bump (if required):	IEC 512-4 test 6b
Shock:	IEC 512-4 test 6c
Climatic sequence:	IEC 512-6 test 11a
Insulation resistance:	CECC 96000 § 4-3-3-1
Voltage proof:	CECC 96000 § 4-3-4-1
Temperature rise (if applicable):	IEC 512-3 test 5a
Soldering:	IEC 512-6
Operating force:	IEC 512-7 test 13c
Sealing (air leakage):	IEC 68-2-17 test Qa
Sealing water proof:	CECC 96000 § 4-3-14-2
Sealing immersion proof:	IEC 68-2-17 test Qf
Sealing (bubble test):	IEC 68-2-17 test Qc
Low air pressure (if required):	IEC 512-6 test 11k
Corrosion (salt resist) (if required):	IEC 512-6 test 11f
Dry heat:	IEC 512-6 test 11i
Cold:	IEC 512-6 test 11j

Toggle switches

Section A

ZL series

Tiny toggle switches - metal bushing

Distinctive features - Specifications - Overview

- ❑ **Ø 4,83 mm threaded bushing**
- ❑ **Solder lug and straight PC terminals**

A

ELECTRICAL SPECIFICATIONS

- Max. current/voltage rating with resistive load :
  - gold plated contacts : 0,4VA 20V max. AC or DC
  - silver plated contacts : 0,5A 48V max. AC or DC
- Minimum load : 10mA 50mV - 10µA 5VDC
- Contact resistance : 20 mΩ max.
- Insulation resistance : 1.000 MΩ min. at 500VDC
- Dielectric strength: 1.000 Vrms 50 Hz min. between terminals and frame
  500 Vrms 50 Hz min. between terminals
- Electrical life at full load :

Contacts	Number of cycles	
	2 positions	3 positions
Gold plated	60.000	30.000
Silver plated	20.000	10.000

MATERIALS

- Case : thermoplastic UL94-V0
- Actuator : brass, nickel plated
- Bushing : zamac, tin plated
- Contacts and terminals :
  0 : brass, gold plated (standard)
  1 : brass, silver plated
  3 : brass, gold plated
  (1,27 micron gold)
- Terminal seal : epoxy

SOLDERING

- Hand soldering : 280°C max. for 5 seconds max.
- Wave soldering : 260°C max. for 5 seconds max.

GENERAL SPECIFICATIONS

- Strength of terminals : pull-out force 10N max.
- Torque : 1 Nm max. applied between the 2 nuts
- Max. panel thickness : 1,5 mm (.059) with 2 nuts
- Operating temperature : -30°C to +85°C
- Moisture : 21 days 95 % (NFC 20-603 - IEC 8-2-3)

ZL [ ] [ ] [ ] [ ] [ ] [ ]

SERIES

Number of poles

3	Single pole

Electrical functions

1	ON	-	OFF
6	ON	-	ON
9	ON	OFF	ON
7	MOM	OFF	MOM
8	ON	OFF	MOM
2	ON	-	MOM

Terminals

S0	Solder lug
P0	Straight PC

Contact and terminal materials

0	Brass, gold plated
1	Brass, silver plated
3	Brass, gold plated (1,27 micron gold)

Bushings

01	Threaded, with flat
02	Threaded, with keyway

Models

00	Standard model

Dimensions : First dimensions are in mm while inches are shown as bracketed numbers.

Packaging unit : 100 pieces

Mounting accessories : Standard hardware supplied with all models : 2 hex nuts 7 mm (.275) across flats P/N U5731, 1 locking ring P/N U5821 (with keyway) or U5831 (with flat) and 1 lockwasher P/N U5841.

The company reserves the right to change specifications without notice.

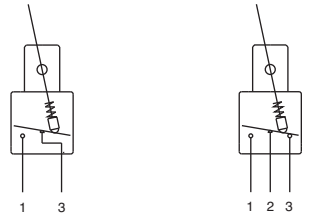

Function 1 Other functions

- Single pole
- Gold plated or silver plated contacts
- Epoxy sealed terminals

Other actuator lengths available on request.

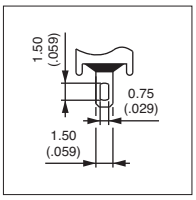

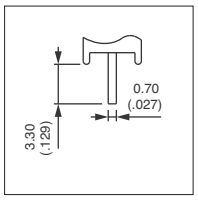

A

MODEL STRUCTURE

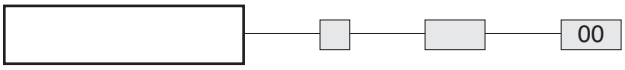

Shown with threaded bushing code 01

Solder lug terminals : ZL..S0

	III	II	I
ZL31S0	ON	-	OFF
ZL36S0	ON	-	ON
ZL39S0	ON	OFF	ON
ZL37S0	MOM	OFF	MOM
ZL38S0	MOM	OFF	ON
ZL32S0	MOM	-	ON

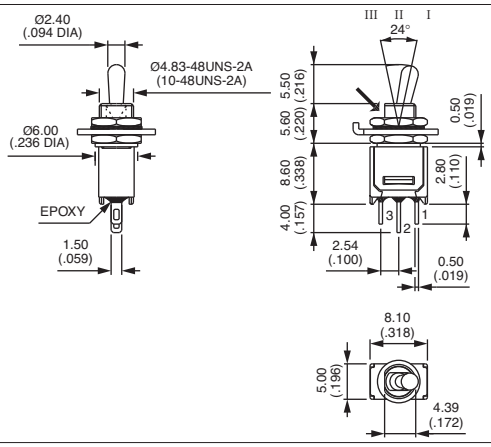

→ Flat

Straight PC terminals : ZL..P0

	III	II	I
ZL31P0	ON	-	OFF
ZL36P0	ON	-	ON
ZL39P0	ON	OFF	ON
ZL37P0	MOM	OFF	MOM
ZL38P0	MOM	OFF	ON
ZL32P0	MOM	-	ON

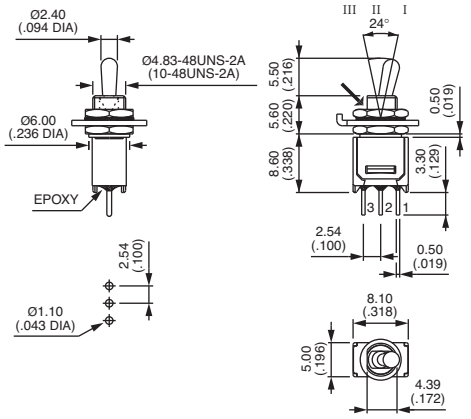

→ Flat

CONTACT & TERMINAL MATERIALS

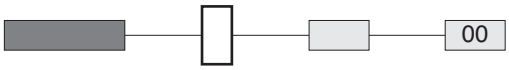

0 : Brass, gold plated (standard) - **1 :** Brass, silver plated
3 : Brass, gold plated (1,27µ gold)

BUSHINGS

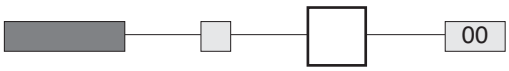

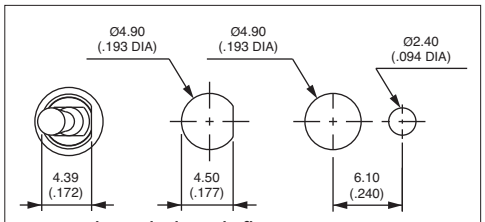

01 Threaded, with flat

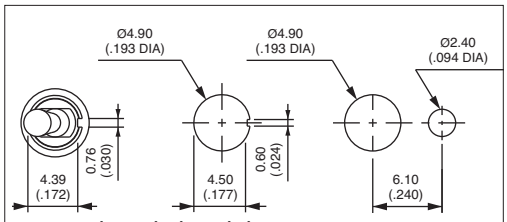

02 Threaded, with keyway

SMT TL series

Surface mount tiny washable toggle switches

Distinctive features and specifications

- ❑ **Entirely designed for surface mount**
- ❑ **Tape and reel packaging**
- ❑ **Reflow solderable**
  - High temperature plastic materials
  - Tin plated ground plate
  - Terminal coating : pure tin plating over nickel barrier
  - Terminals turned to the outside, preventing the shadow effect in infrared soldering and permitting visual inspection of solder joints
  - Distance between case and circuit : 0,55 mm (.021)
  - End stackable with 10,16 mm (.40) pitch
  - Available with positioning pins to ensure switch orientation during the reflow process and increasing switch mechanical resistance
- ❑ **Protected against electrostatic discharges (ESD) up to 10 KV**
- ❑ **Washable**
  Construction withstands cleaning processes, including hot water under pressure

ELECTRICAL SPECIFICATIONS

- Max. current/voltage rating with resistive load : 0,4VA 20V max. AC or DC
- Minimum load : 10mA 50mV or 10µA 5VDC
- Initial contact resistance : 20 mΩ max
- Insulation resistance : 1.000 MΩ min. at 500VDC
- Dielectric strength : 1.000 Vrms. 50 Hz min. between terminals and frame
  500 Vrms. 50 Hz min. between terminals
- Electrical life at full load :
  - 2 position switches : 60.000 cycles
  - 3 position switches : 30.000 cycles
- Static resistance : 10 KV (Schaffner equipment)

GENERAL SPECIFICATIONS

- Operating temperature : -40°C to +85°C
- Moisture resistance : 21days per IEC 512-6 test 11c
- Vibration resistance : 10-500 Hz / 10 g per IEC 512-4 test 6d
- Shock resistance : 50 g per IEC 512-4 test 6c

MATERIALS

- Case : high temperature plastic material UL94-V0
- Actuator : brass, nickel plated, with high temperature UL94-V0 plastic cap
- Ground plate and positioning pins : steel, tin plated
- Contacts : brass, gold plated
- Terminals : brass, with pure tin plating over nickel barrier

SOLDERING AND CLEANING

- Reflow soldering : infrared, vapor phase or infrared convection
- Washable per IEA-RS448-2 :
  - water + detergent - preferred
  - solvents
- Further information on reflow soldering : see end of catalogue.

PACKAGING

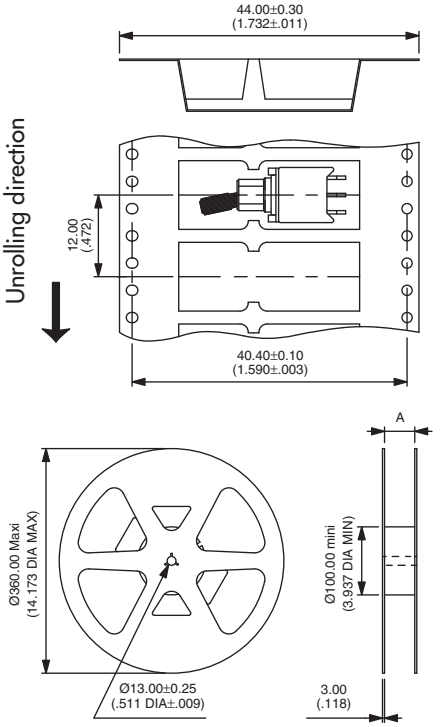

Tape width	24.00 (.944)	44.00 (1.732)
Reel (dimension A)	24.40+2.00/0.00 (.960+.078/.000)	44.40+2.00/0.00 (1.748+.078/.000)

Standard packaging unit : 700 pieces
Tape meeting international standard IEC - Publication 286-3 (EIA481A)
Start leader : 400 mm min.

Dimensions : First dimensions are in mm while inches are shown as bracketed numbers.

The company reserves the right to change specifications without notice.

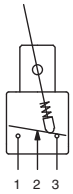

- With or without positioning pins
- Single pole

Also available for vertical mounting. On request.

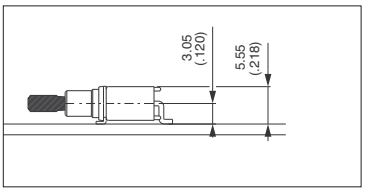

A

Without positioning pins

	III	II	I
TL36WS84000	ON	-	ON
TL39WS84000	ON	OFF	ON
TL37WS84000	MOM	OFF	MOM
TL38WS84000	ON	OFF	MOM
TL32WS84000	ON	-	MOM

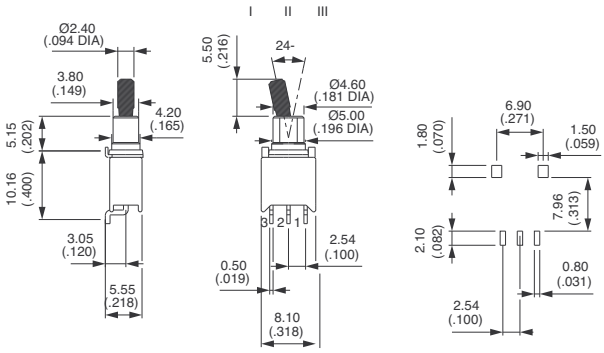

With positioning pins

	III	II	I
TL36WS84065	ON	-	ON
TL39WS84065	ON	OFF	ON
TL37WS84065	MOM	OFF	MOM
TL38WS84065	ON	OFF	MOM
TL32WS84065	ON	-	MOM

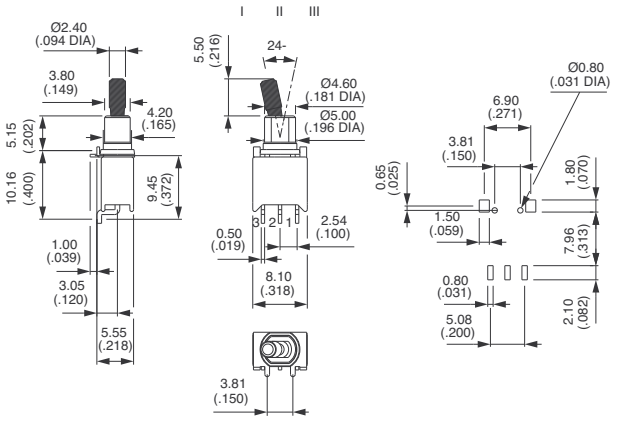

TL series

Tiny washable toggle switches

Distinctive features and specifications

A

- **Process sealed**
  - Single piece case
  - O-ring seal between actuator and bushing
  - Epoxy sealed terminals
- **Wide variety of contact materials**
- **Same PCB layout as TP, TR and TG tiny switches**

ELECTRICAL SPECIFICATIONS

- Max. current/voltage rating with resistive load :
  - gold plated contacts : 0,4VA 20V max. AC or DC
  - silver plated contacts : 0,5A 48V max. AC or DC
- Minimum load : 10mA 50mV - 10µA 5VDC
- Contact resistance : 20 mΩ max.
- Insulation resistance : 1.000 MΩ min. at 500VDC
- Dielectric strength :
  1.000 Vrms 50 Hz min. between terminals and frame
  500 Vrms 50 Hz min. between terminals
- Electrical life at full load :

Contacts	Number of cycles	
	2 positions	3 positions
Gold plated	60.000	30.000
Silver plated	20.000	10.000

MATERIALS

- Case : PBT
- Actuator : brass, nickel plated
- Contacts and terminals :
  0 : brass, gold plated
  1 : brass, silver plated
  3 : brass, gold plated (1,27 micron gold)
  8 : contact brass, gold plated + tin plated terminals
  9 : contact brass, gold plated (1,27 micron gold) + tin plated terminals
- Terminal seal : epoxy

GENERAL SPECIFICATIONS

- Strength of terminals : pull-out force - 10N max.
- Operating temperature : -30°C to +85°C
- Moisture : 21 days 95 % (NFC 20-603 - IEC 68-2-3)
- Cleaning : solvents or water + detergent
- Wave soldering : 260°C - 5 sec.

The company reserves the right to change specifications without notice.

MODEL STRUCTURE

TL

SERIES

Number of poles

3	Single pole
4	Double pole

Electrical functions

6	ON	-	ON
9	ON	OFF	ON
7	MOM	OFF	MOM
8	ON	OFF	MOM
2	ON	-	MOM

Terminals

P0	Straight PC
Y0	Bracket mounting
W0	Right angle, horizontal mounting
WW	Right angle, vertical mounting
MW	Wire-wrap

A

OPTIONS

Contact and terminal materials

0	Brass, gold plated
1	Brass, silver plated
3	Brass, gold plated (1,27 micron gold)
8	Contact brass, gold plated + tin plated terminals
9	Contact brass, gold plated (1,27 micron gold) + tin plated terminals (SP only)

Lever and case styles

Lever styles :

- Short - standard
- Medium
- Long
- Cylindrical

Codes according to lever finish and case colours : see "options" pages.

Insulated levers available.

Special options

00	No special requirement
07	Trimmed terminals - length 3,2 (.125)
08	Extended terminals
18	Switch without ground plate
20	Ground plate with 2 pins
25	Trimmed terminals - length 5 (.196)
30	Wire-wrap on bracket mounting models
50	Crimped ground plate pins

ABOUT THIS SERIES

On the following pages, you will find successively :
- model structure of switches
- options in the same order as in above chart

Dimensions : first dimensions are in mm while inches are shown as bracketed numbers.

NOTICE : please note that not all combinations of above numbers are available.
Refer to the following pages for further information.

Packaging unit : 100 pieces, except for models with WW terminals (50 pieces)

TL series

Tiny washable toggle switches

MODEL STRUCTURE

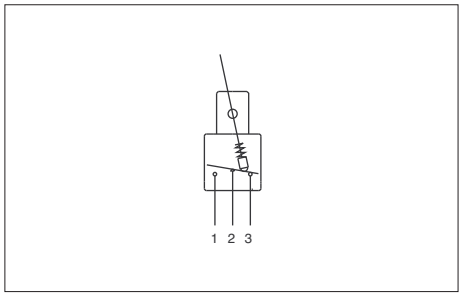

- Straight PC, right angle or wire-wrap terminals
- 1 and 2 pole configurations

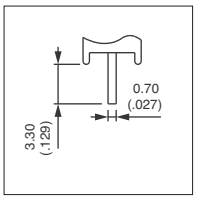

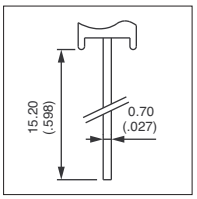

A

MODEL STRUCTURE

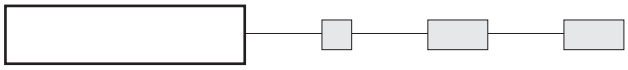

Shown with standard lever

Straight PC terminals : TL..P0

Single pole	Double pole	III	II	I
TL36P0	**TL46P0**	ON	-	ON
TL39P0	**TL49P0**	ON	OFF	ON
TL37P0	**TL47P0**	MOM	OFF	MOM
TL38P0	**TL48P0**	ON	OFF	MOM
TL32P0	**TL42P0**	ON	-	MOM

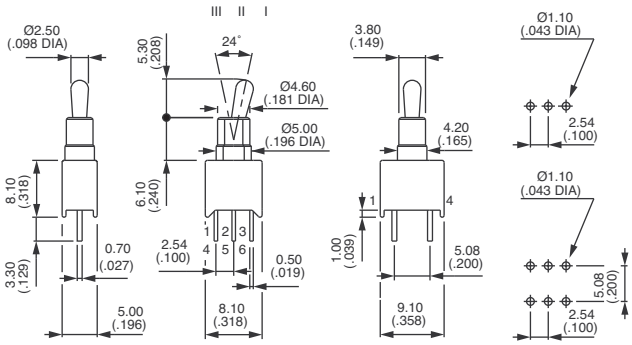

Straight PC terminals - bracket mounting : TL..Y0

Single pole	Double pole	III	II	I
TL36Y0	**TL46Y0**	ON	-	ON
TL39Y0	**TL49Y0**	ON	OFF	ON
TL37Y0	**TL47Y0**	MOM	OFF	MOM
TL38Y0	**TL48Y0**	ON	OFF	MOM
TL32Y0	**TL42Y0**	ON	-	MOM

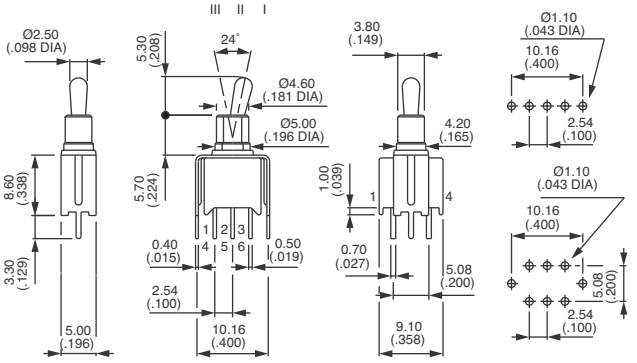

Right angle terminals - horizontal mounting : TL..W0

Single pole	Double pole	III	II	I
TL36W0	**TL46W0**	ON	-	ON
TL39W0	**TL49W0**	ON	OFF	ON
TL37W0	**TL47W0**	MOM	OFF	MOM
TL38W0	**TL48W0**	ON	OFF	MOM
TL32W0	**TL42W0**	ON	-	MOM

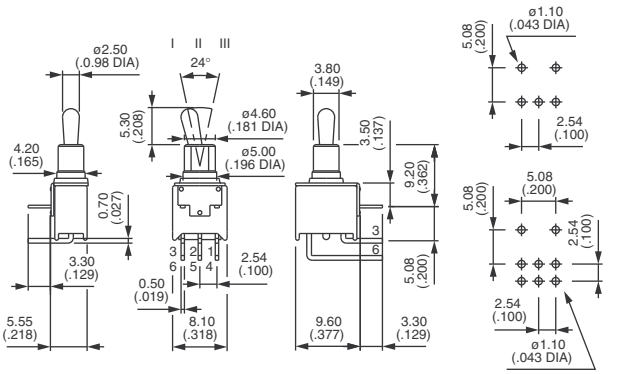

TL series

Tiny washable toggle switches

Right angle terminals - vertical mounting : TL..WW

Single pole	Double pole	III	II	I
TL36WW	**TL46WW**	ON	-	ON
TL39WW	**TL49WW**	ON	OFF	ON
TL37WW	**TL47WW**	MOM	OFF	MOM
TL38WW*	**TL48WW***	ON	OFF	MOM
TL32WW*	**TL42WW***	ON	-	MOM

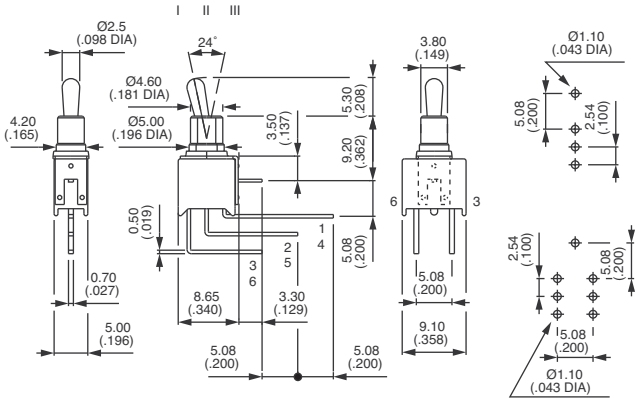

Wire-wrap terminals : TL..MW

Single pole	Double pole	III	II	I
TL36MW	**TL46MW**	ON	-	ON
TL39MW	**TL49MW**	ON	OFF	ON
TL37MW	**TL47MW**	MOM	OFF	MOM
TL38MW	**TL48MW**	ON	OFF	MOM
TL32MW	**TL42MW**	ON	-	MOM

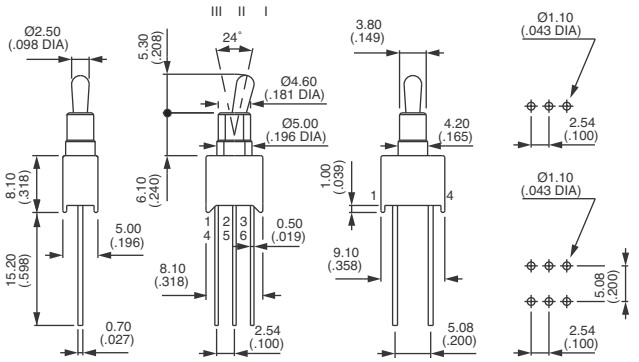

* Functions 2 and 8 : reversed connection available. Consult factory.

PCB MOUNTING

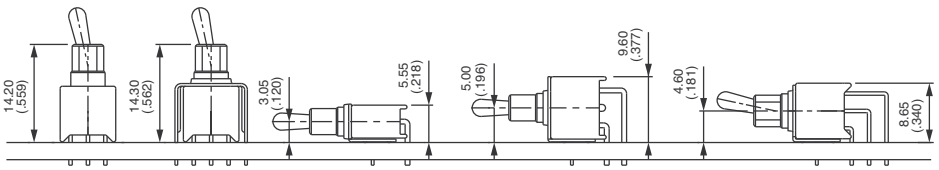

TL series

Tiny washable toggle switches

OPTIONS

CONTACT AND TERMINAL MATERIALS

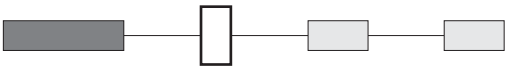

0	Brass, gold plated
1	Brass, silver plated
3	Brass, gold plated (1,27 micron gold)
8	Contact brass, gold plated + tin plated terminals
9	Contact brass, gold plated (1,27 micron gold) + tin plated terminals (single pole only)

A

LEVER AND CASE STYLES

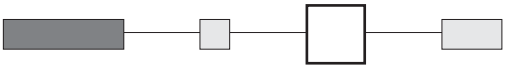

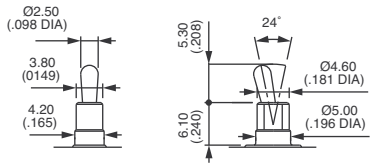

Short - standard

LEVER \ CASE	Blue	Black
Nickel plated	**00**	**50**
Matt black	**01**	**51**

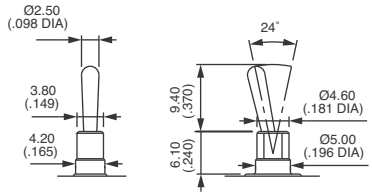

Long

LEVER \ CASE	Blue	Black
Nickel plated	**02**	**52**
Matt black	**03**	**53**

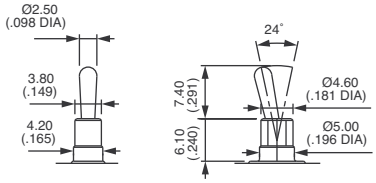

Medium

LEVER \ CASE	Blue	Black
Nickel plated	**04**	**54**
Matt black	**05**	**55**

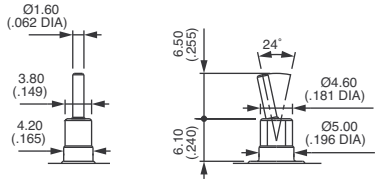

Cylindrical

LEVER \ CASE	Blue	Black
Nickel plated	-	**56**

LEVER AND CASE STYLES (continued)

Insulated levers - Protected against electrostatic discharges (ESD) up to 10KV. Black colour.

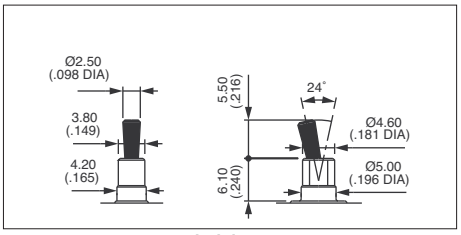

40 With blue case
94 With black case

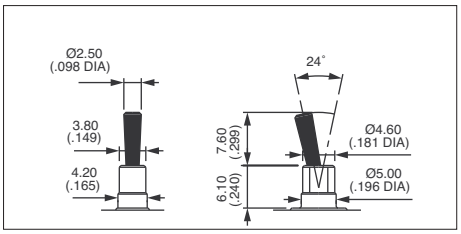

30 With blue case
90 With black case

SPECIAL OPTIONS

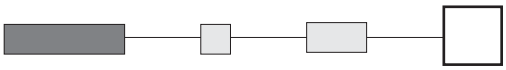

00 No special requirement

07 **Trimmed terminals** - length 3,2 mm (.125) for TL..WW models only

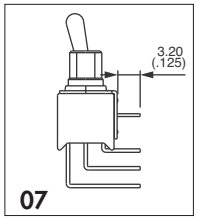

08 **Extended terminals** for TL..W0 models only

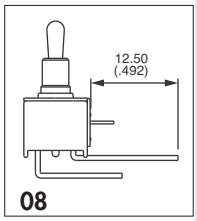

18 Switch **without ground plate** for TL..WW models only

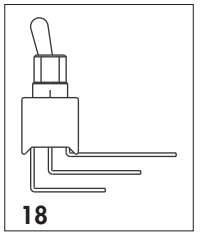

20 **Ground plate with 2 pins** for TL..WW models only

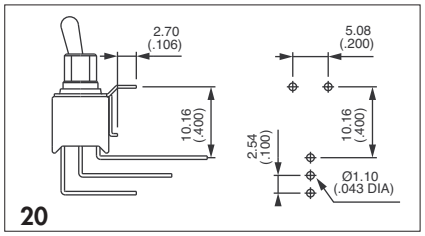

25 **Trimmed terminals** - length 5 mm (.196) for all models, except TL..WW

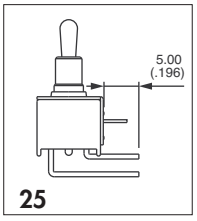

30 **Wire-wrap terminals** on models with mounting **bracket**

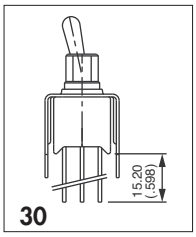

50 **Crimped ground plate pins**.
Retains switch on PCB during handling and wave soldering.
For models TL..W0, TL..WW and TL..Y0 single and double pole.

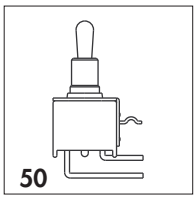

S and SF series

Washable miniature toggle switches

Distinctive features and specifications

A

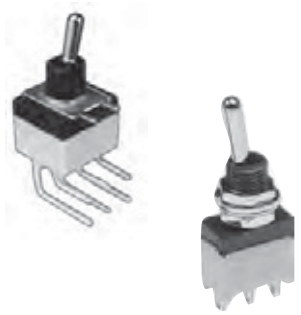

❑ Sealed
- Secure assembly of the two case parts
- Internally sealed bushing
- Epoxy sealed terminals

❑ Process compatible (S series)
- Wave solderable
- Washable

❑ Optional ESD protection

ELECTRICAL SPECIFICATIONS

- Max. current/voltage rating with resistive load :
  - silver contacts (A or 1) : 4A 30VDC
  - gold plated brass contacts (CD or 0) : 0,4VA 20VAC or DC
  - gold plated silver contacts (AD or 2) : 4A 30VDC (300mA 30VDC for gold plating)
- Initial contact resistance : 10 mΩ max.
- Insulation resistance : 1.000 MΩ min.
- Dielectric strength : 1.000 Vrms 50 Hz min.
- Electrical life at full load :

Contacts	Number of cycles	
	2 positions	3 positions
A or 1	40.000	40.000
CD or 0	100.000	50.000
AD or 2	40.000	40.000

MATERIALS

- Case and cover : UL94-VO, polyamide, glass filled or PES
- Actuator : brass, nickel plated
- Contacts
  CD or **0** : brass, gold plated
  A or **1** : silver
  AD or **2** : silver, gold plated
- Terminal seal : epoxy

GENERAL SPECIFICATIONS

- Mechanical strength :
  Terminals are strengthened by a bracket or a ground plate ensuring the rigidity of the switch on the board.
  Actuator strength is 10N max.
- Operating temperature : -20°C to +85°C
- Storage temperature : -40°C to +85°C
- Moisture :
  The insulating materials employed and the complete seal permit the switches to withstand a 56 days moisture test (IEC 68-2-3).
- Soldering - thermal shock (S series only) :
  The switches are especially designed for flow soldering at 260°C during 5 seconds owing to high temperature polymer parts.
- Iron soldering (SF series) : 300°C 5 sec. max.
- Solderability : The switches are tested at 235°C according to IEC 68-2-20 after accelerated aging.

AGENCY APPROVALS

2A 250VAC
4A 125VAC

CECC 96201-006

Availability : consult factory for details of approved models.

Marking : to order switches marked UL or CECC, complete appropriate box of ordering format.

The company reserves the right to change specifications without notice.

MODEL STRUCTURE

S				

SERIES

Terminals

W	Right angle, horizontal mounting
WW	Right angle, vertical mounting
Y	Bracket mounting

Bushing and terminals

2	Terminal spacing 4,7 (.185) or 3,81 (.150)
0	Terminal spacing 5,08 (.200) (SW switches)

All models with plain bushing.

Number of poles

3	Single pole
4	Double pole

Electrical functions

6	ON	-	ON
9	ON	OFF	ON
7	MOM	OFF	MOM
8	ON	OFF	MOM
2	ON	-	MOM
4TH	ON	ON	ON

A

OPTIONS

Contact materials

A	Silver
AD	Silver, gold plated
CD	Brass, gold plated

Levers

-7	Short
	Standard
-13	Long

Insulated levers

-11	Long
-8	Short

Approvals

UL
CECC

Availability : Consult factory for details of approved models.

Special options

X601	Silver plated brass contacts
X696	Higher bushing (for insulated levers)

Insulating caps

U270	For lever 13
U1710	For lever 7

ABOUT THIS SERIES
On the following pages, you will find successively :
- model structure of switches
- options in the same order as above

Dimensions : first dimensions are in mm while inches are shown as bracketted numbers.

NOTICE : please note that not all combinations of above numbers are available.
Refer to the following pages for further information.

Packaging unit : 50 or 25 pieces depending on model.

S series

Washable toggle switches - plain bushing

MODEL STRUCTURE

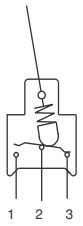

- Straight PC or right angle terminals
- Terminal spacing 4,7 (.185) or 5,08 (.200) on SW switches
- 1 and 2 pole configurations

A

MODEL STRUCTURE

Shown with lever (-7)

Right angle terminals - horizontal - spacing 4,7 (.185)

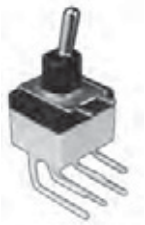

Single pole	Double pole	III 2-3 5-6	II	I 2-1 4-5
SW236	**SW246**	ON	-	ON
SW239	**SW249**	ON	OFF	ON
SW237	**SW247**	MOM	OFF	MOM
SW238	**SW248**	ON	OFF	MOM
SW232	**SW242**	ON	-	MOM
	SW244TH*	ON	ON	ON

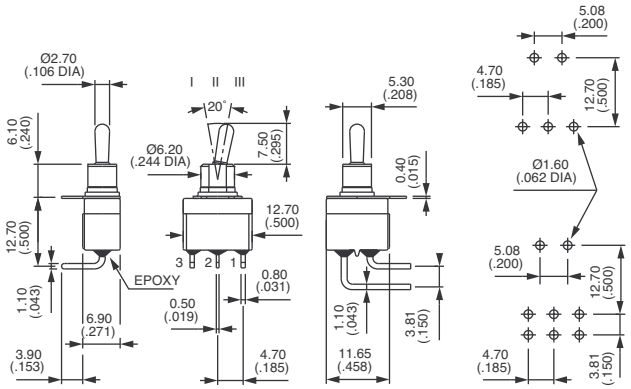

Right angle terminals - vertical

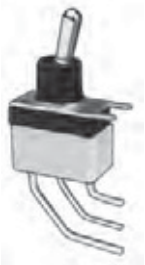

Single pole	Double pole	I 2-3 5-6	II	III 2-1 4-5
SWW236	**SWW246**	ON	-	ON
SWW239	**SWW249**	ON	OFF	ON
SWW237	**SWW247**	MOM	OFF	MOM
SWW238	**SWW248****	ON	OFF	MOM
SWW232	**SWW242****	ON	-	MOM
	SWW244TH*	ON	ON	ON

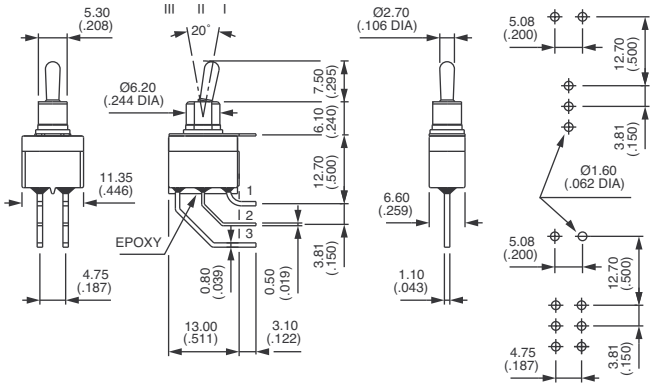

Bracket mounting

Single pole	Double pole	III 2-3 5-6	II	I 2-1 4-5
SY236	**SY246**	ON	-	ON
SY239	**SY249**	ON	OFF	ON
SY237	**SY247**	MOM	OFF	MOM
SY238	**SY248**	ON	OFF	MOM
SY232	**SY242**	ON	-	MOM
	SY244TH*	ON	ON	ON

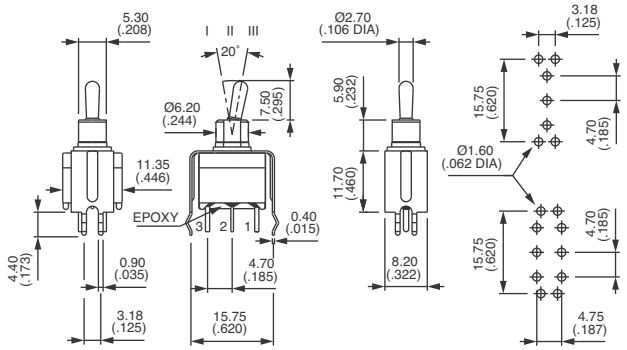

* Function 4 : SP in DP case - TH connection, see end of catalogue.
** Functions 2 and 8 : reversed connection available. Consult factory.

Right angle terminals - horizontal - spacing 5,08 (.200)

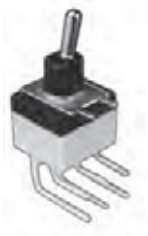

Single pole	Double pole	III 2-3 5-6	II	I 2-1 4-5
SW036	**SW046**	ON	-	ON
SW039	**SW049**	ON	OFF	ON
SW037	**SW047**	MOM	OFF	MOM
SW038	**SW048**	ON	OFF	MOM
SW032	**SW042**	ON	-	MOM
	SW044TH*	ON	ON	ON

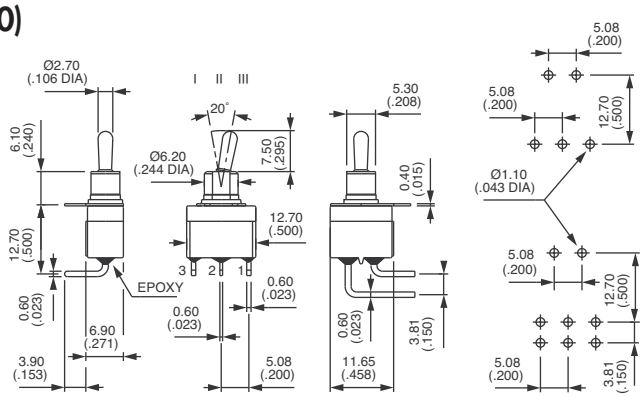

* Function 4 : SP in DP case, see end of catalogue.

PCB MOUNTING

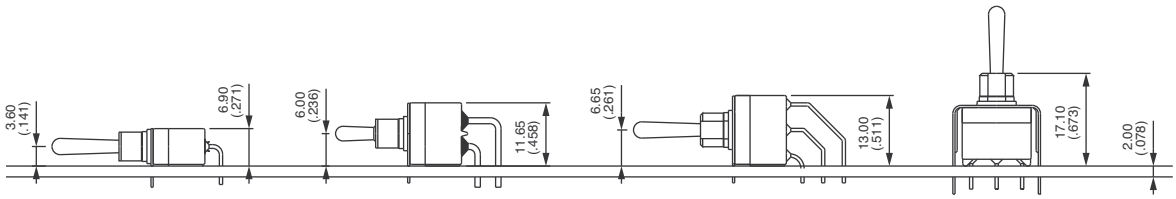

CAP FOR PCB PROCESSING

Provide additional protection during PCB processing.
Supplied mounted on the switch or separately.
Material : vinyl

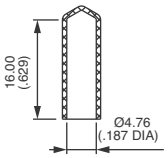

U3012

S series

Washable toggle switches - plain bushing

OPTIONS

A

CONTACT MATERIALS

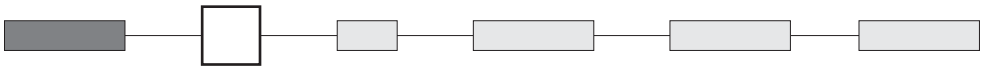

A Silver
AD Silver, gold plated
CD Brass, gold plated

LEVERS

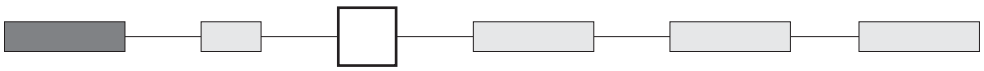

Dash compulsory before lever code.

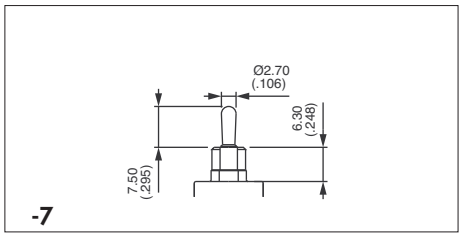

Standard

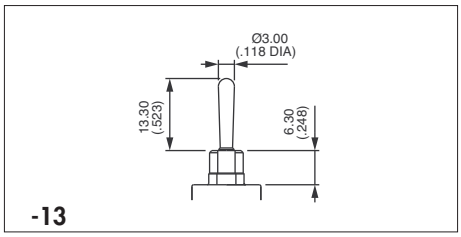

Long

If actuator not specified, we supply former default option -13.

Insulated levers

Protected against electrostatic discharges (ESD) up to 12 KV. Black colour.

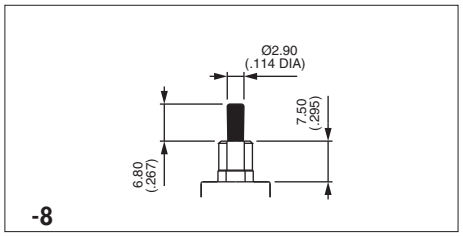

Short

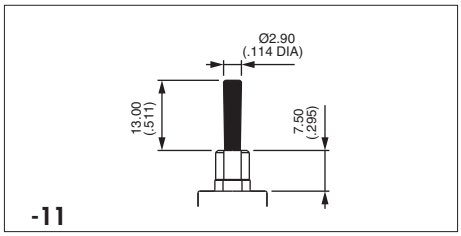

Long

To combine with option X696.

SPECIAL OPTIONS

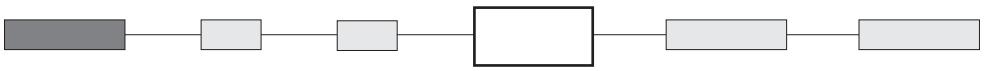

X601 Silver plated brass contacts
Lower rating - Minimum quantity : 5.000 pieces per model and shipment.

X696 Higher bushing 7,50 (.295). Compulsory for insulated levers 11 and 8.

AGENCY APPROVALS

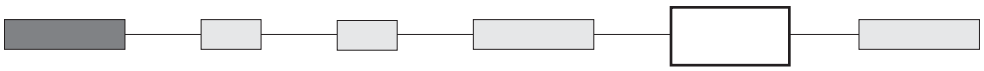

UL
CECC

Availability : consult factory for details of approved models.

Marking : to order switches marked UL or CECC, please complete above box with desired approvals.
Blank : no agency approval required.

INSULATING CAPS

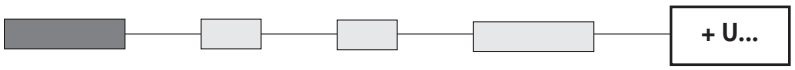

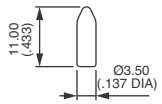

U270

For lever 13

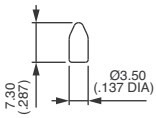

U1710

For lever 7

Cap colours	
Replace "0" by number	
1	blue
1/4	dark blue
2	black
3	green
4	grey
5	yellow
6	red
7/1	white
9	orange

SF series

Washable toggle switches - insulated threaded bushing

Overview

MODEL STRUCTURE

SF

SERIES

Number of poles

3	Single pole

Electrical functions

6	ON	-	ON
9	ON	OFF	ON
7	MOM	OFF	MOM
8	ON	OFF	MOM
2	ON	-	MOM

Terminals

S0	Solder lug terminals
P0	Straight PC terminals

OPTIONS

Contact and terminal materials

0	Brass, gold plated
1	Silver
2	Silver, gold plated
5	Special contact, lower rating

Levers

00	Long
01	Short

Insulated levers

08	Short
11	Long

Model

00	Standard

Insulating cap

10	P/N U270 For lever 00 only

ABOUT THIS SERIES

On the following pages, you will find successively :
- model structure of switches
- options in the same order as above

Specifications are at the beginning of the S series.

Dimensions : first dimensions are in mm while inches are shown as bracketted numbers.

Mounting accessories : 2 hex nuts 8 mm (.314) across flats, 1 locking ring and 1 lockwasher
Standard and special hardware available are presented in section I.

Packaging unit : 50 to 25 pieces depending on model.

MODEL STRUCTURE

SF series

Washable toggle switches - insulated threaded bushing

Solder lug or straight PC terminals

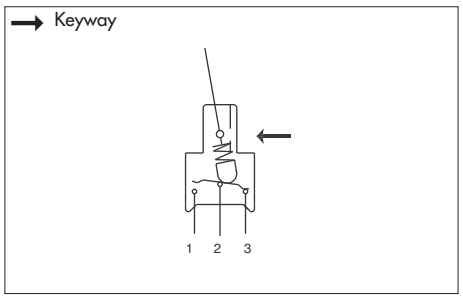

- Single pole configurations
- Max. torque : 0,25 Nm (.184 Ft.lb)
- Iron soldering : 300°C max. 5 sec. max.
- Max. panel thickness :
  2,5 mm (.098) with 2 nuts
  4 mm (.157) with 1 nut

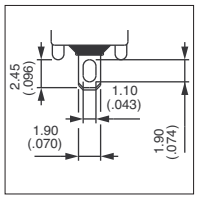

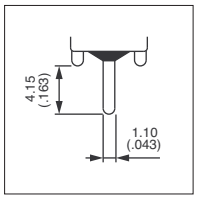

A

MODEL STRUCTURE

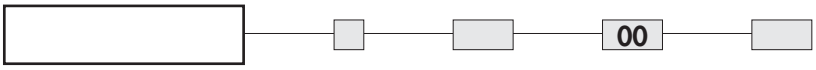

Shown with standard lever 00

Solder lugs : SF..S0

	III	II	I
	2-3		1-2
SF36S0	ON	-	ON
SF39S0	ON	OFF	ON
SF37S0	MOM	OFF	MOM
SF38S0	ON	OFF	MOM
SF32S0	ON	-	MOM

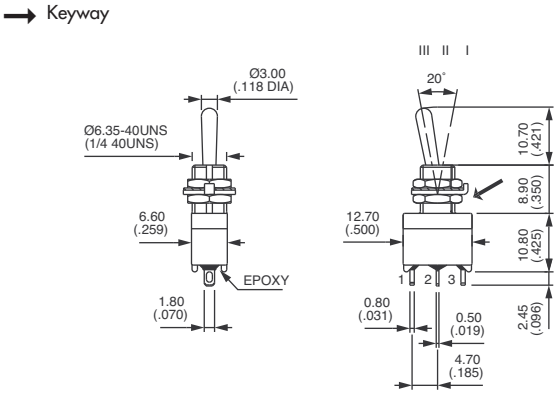

Straight PC terminals : SF..P0

	III	II	I
	2-3		1-2
SF36P0	ON	-	ON
SF39P0	ON	OFF	ON
SF37P0	MOM	OFF	MOM
SF38P0	ON	OFF	MOM
SF32P0	ON	-	MOM

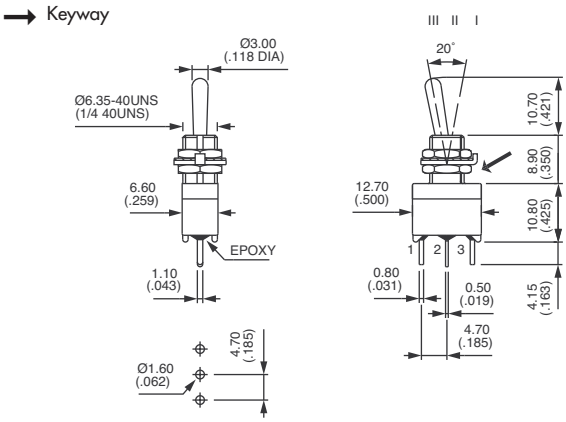

PANEL CUT-OUT

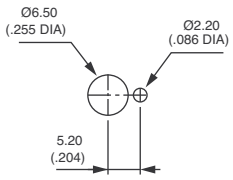

SF series

Washable toggle switches - insulated threaded bushing

OPTIONS

A

CONTACT AND TERMINAL MATERIALS

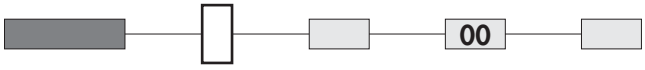

0 Brass, gold plated (standard)
1 Silver
2 Silver, gold plated
5 Special contact, lower rating, minimum quantity : consult factory.

LEVERS

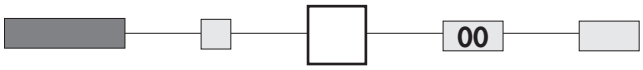

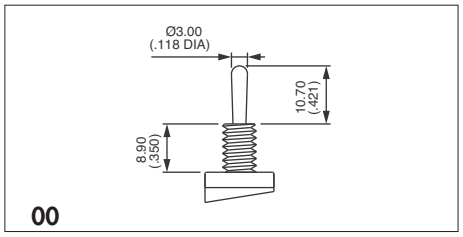

Standard

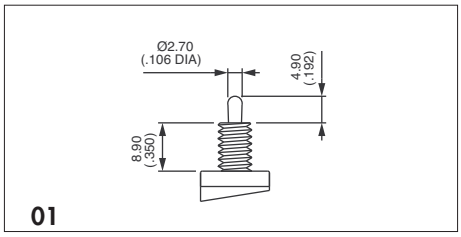

Insulated levers

Protected against electrostatic discharges (ESD) up to 12KV. Black colour.

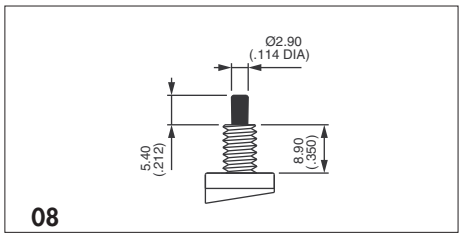

Short

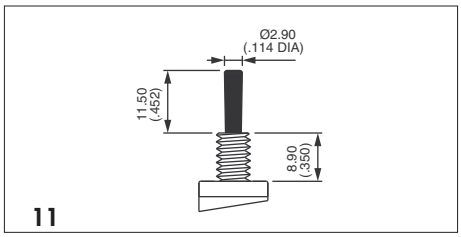

Long

INSULATING CAP

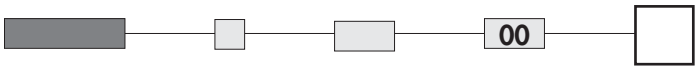

Blank Without cap

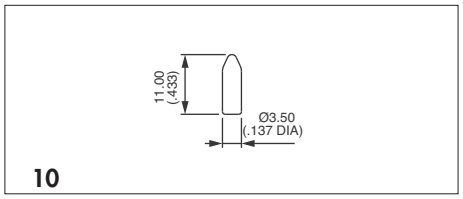

P/N U270 - For lever 00

To order cap separately, use its part number (U270).

Cap colours	
Replace "0" by number	
1	blue
1/4	dark blue
2	black
3	green
4	grey
5	yellow
6	red
7/1	white
9	orange

A

THE WIDEST RANGE IN MINIATURE SWITCHES

- ❑ 17 actuators including toggles, paddle levers and locking levers in different lengths.
- ❑ Various contact materials for low and high currents.
- ❑ 8 functions including maintained and momentary versions.
- ❑ 1 to 4 pole configurations.

- ❑ 12 terminal types including 9 for PC board mounting. Other types include quick-connect and wire-wrap.
- ❑ 6 bushing styles from 6 (.236) plain to 11,9 (15/32) threaded.
- ❑ 3 types of finish including military black.
- ❑ 3 approvals (UL - CSA - CECC).

- ❑ 4 types of sealing for terminal or front panel requirements.
- ❑ Numerous accessories available for actuator and bushing options.

The company reserves the right to change specifications without notice.

5000 series

Toggle switches

Overview

MODEL STRUCTURE

A

5						

SERIES

Number of poles

3	Single pole
4	Double pole
5	Three pole
6	Four pole

Terminals

Blank	Solder lugs or straight PC depending on model
M	Solder lugs with Ø 11,9 (15/32) bushing (5600 switches)
MIWR	Wire wrap (for 5200 switches only)
W	Right angle, horizontal mounting (5200 - 5400 switches)
WW	Right angle, vertical mounting (5200 - 5400 switches)
Y]	
Y4]	Bracket mounting (5200 switches)
Y6]	
Y7]	
Z	Quick connect (5200 - 5100 - 5900 switches)

Terminals and bushing

0	Straight PC terminals, 5,08 (.200) terminal spacing, **with Ø 6,35 (1/4)** threaded bushing
1	Straight PC or quick-connect terminals, 4,70 (.185) terminal spacing, **with Ø 6** (.236) threaded bushing.
2	Straight PC terminals, 4,70 (.185) terminal spacing, right angle, quick-connect or wire wrap terminals, **with 6,35 (1/4)** threaded bushing
3	Straight PC terminals, 4 (.157) terminal spacing, **with Ø 6** (.236) threaded bushing
4	Straight PC terminals, 4 (.157) terminal spacing or right angle terminals , **with Ø 6,35 (1/4)** threaded bushing
5	Solder lug terminals, **with Ø 6 (.236)** threaded bushing.
6	Solder lug terminals, **with Ø 6,35 (1/4) or Ø 11,9 (15/32)** threaded bushing.
7	Solder lug terminals, with Ø 6,35 (1/4) **flatted** bushing.
9	Straight PC or quick-connect terminals, with Ø 6,35 (1/4) **flatted** bushing, 4,70 (.185) terminal spacing.

Electrical functions

6	ON	-	ON
9	ON	OFF	ON
7	MOM	OFF	MOM
8	ON	OFF	MOM
2	ON	-	MOM
4	ON	ON	ON
	ON	ON	MOM ▲
	MOM	ON	MOM ▲

Function 4
Must not have blank in "connections" box.
. ▲ Must not have blank in "momentary" box.

Connections for function 4

TH	Standard
CT	Reversed

See wiring diagrams end of catalogue.

. For functions 4, 4-1R, 4-2R (leave blank for all other functions).

Momentary for function 4

1R	ON	ON	MOM
2R	MOM	ON	MOM

Leave blank for other functions.

ABOUT THIS SERIES
On the following pages, you will find successively :
- model structure of switches with threaded bushing
- model structure of switches with plain bushing
- options in the same order as in above chart

Dimensions : first dimensions are in mm while inches are shown as bracketed numbers.

NOTICE : please note that not all combinations of above numbers are available.
Refer to the following pages for further information.

Finish

Blank Nickel plated
G Black finish on bushing, actuator and hardware.

Fluorescent tip

Blank None
-038 White fluorescent tip to lever

Available with matt black finish (G) only.

Special options

Blank No special requirement
X408 Front panel sealing by two O-rings
X404 Horizontal right angle with reduced overall dimensions

Other : specific bushing height, PC terminal length, finish, ratings, etc... See following pages.

Caps and paddles

Caps	Length
U270	11 (.433)
U1710	7,3 (.287)
Paddles	
U240N	12,4 (.488)
U290N	20 (.787)
U390N	21,5 (.846)

Contact materials

A Silver
AD Silver, gold plated
CD Brass, gold plated

For peak currents, see X814, under Special Options.

Sealing

Blank No sealing except where standard
B Epoxy sealed terminals
K Front panel sealing by one O-ring and sealing washer

Sealing AAAby two O-rings, see X408 under "Special options".

Levers

Length with	threaded bushing	plain bushing
Blank (std)	10,5 (.413)	13,5 (.531)
-2	16 (.629)	19 (.748)
-7	-	6,6 (.259)
-8 (flat)	21,3 (.838)	-
-9 (flat)	11,4 (.448)	-
-12 (flat)	6,3 (.248)	-
-16	5,5 (.216)	8,5 (.334)
-17	7 (.275)	10 (.393)
-21 (+ U640) insulated	21,3 (.838)	-
-22	21,3 (.838)	-
-23	14 (.551)	-
Blank (large)	17,5 (.688)	-
-25	16,30 (.642)	
-27 (large)	11,7 (.460)	-
-4N	9 (.354)	12 (.472)

4N for use with paddle actuators only.

Locking levers

-1V 1 locked position
-2V 2 locked positions
-3V 3 locked positions

Other, consult factory.
For models with Ø 6,35 (1/4) bushing.

Approvals

UL
CSA
CECC

Availability :
Consult factory for details of approved models.

For VDE, refer to 55000.

Sealing boots are available. They are presented in section H.

Mounting accessories : standard hardware supplied with all models with Ø 6,35 (1/4) or Ø 6 (.236) threaded bushing : 2 hex nuts 8 mm (.314) across flats, 1 locking ring and 1 lockwasher.
Standard and special hardware available are presented in section I.

Packaging unit : 25 pieces or 50 pieces depending on models.

5000 series

Toggle switches

Specifications

ELECTRICAL SPECIFICATIONS

- Current/voltage rating with resistive load :

Contact	Maximum	Minimum	Level*
Silver (A)	4A 30VDC	50mA 10VDC	III and IV
Silver, gold plated (AD)	4A 30VDC Gold plating withstands up to 100mA 30VDC	10mA 50mV 10µA 5V	I to IV
Brass, gold plated (CD)	0,4 VA at 20VAC or DC	10mA 50mV 10µA 5V	I and II

- For inductive, lamp or capacitive load, consult factory.
- Initial contact resistance : 10 mΩ max.
- Insulation resistance : 1.000 MΩ min. at 500VDC
- Dielectric strength :
  1.000 Vrms 50 Hz min. between terminals
  1.500 Vrms 50 Hz min. between poles
  1.500 Vrms 50 Hz min. between terminals and frame
- Contact bounce : 2 ms max.
- Electrical life at full load :
  50.000 cycles for single and double pole
  40.000 cycles for 3 pole
  30.000 cycles for 4 pole
- Low level or mechanical life : 100.000 cycles

* For details, see Technical Information, end of catalogue.

MATERIALS

- Case : diallylphthalate (DAP) or high temperature plastic material (UL94-V0)
- Actuator : brass, nickel plated
- Paddles : UL94HB polyamide
- Lever caps : vinyl
- Bushing : brass, nickel plated
- Housing : stainless steel or steel tin plated
- Contacts
  A : silver
  AD : silver, gold plated
  CD : brass, gold plated
  X814 : for peak currrents, see "Special options".
- Terminal seal : epoxy

GENERAL SPECIFICATIONS

- Torque : 1,25 Nm (.922 Ft.lb) max. applied to nut
- Panel thickness : 2,5 mm (.098) with 2 nuts - 4 mm (.157) with 1 nut
- Operating temperature : -40°C to +85°C

AGENCY APPROVALS/PREFERENTIAL LIST

CECC 96201-007

3A 250VAC, 6A 125VAC

For **VDE**, refer to 55000 series.

NATO

Availability : consult factory for details of approved models.

Marking : to order switches marked UL, CSA or CECC, complete appropriate box of ordering format. The preferential list does not appear on the switches.

5000 series

Toggle switches - solder lug terminals

Threaded bushing Ø 6,35 (1/4) : 5600

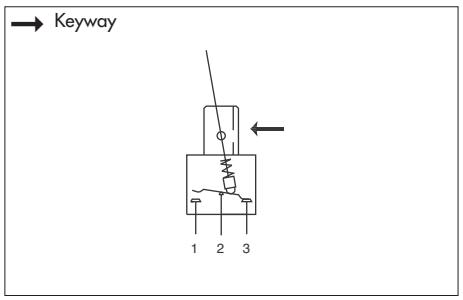

• 1, 2, 3 and 4 pole configurations

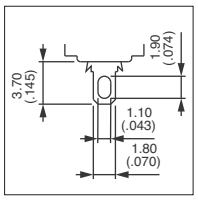

A

MODEL STRUCTURE

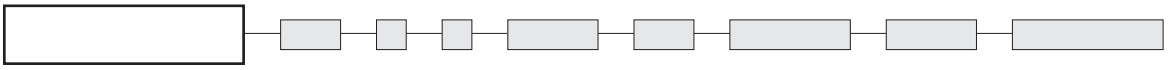

Shown with standard lever

Single pole

	III	II	I
	2-3		1-2
5636	ON	-	ON
5639	ON	OFF	ON
5637	MOM	OFF	MOM
5638	ON	OFF	MOM
5632	ON	-	MOM

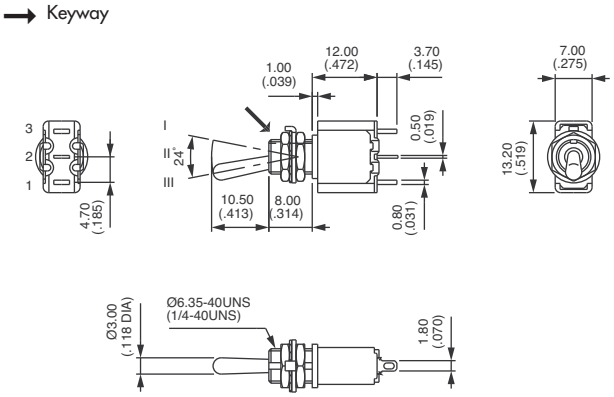

Double pole

	III	II	I
	2-3		1-2
	5-6		4-5
5646	ON	-	ON
5649	ON	OFF	ON
5647	MOM	OFF	MOM
5648	ON	OFF	MOM
5642	ON	-	MOM
5644*	ON	ON	ON
5644 1R*	ON	ON	MOM
5644 2R*	MOM	ON	MOM

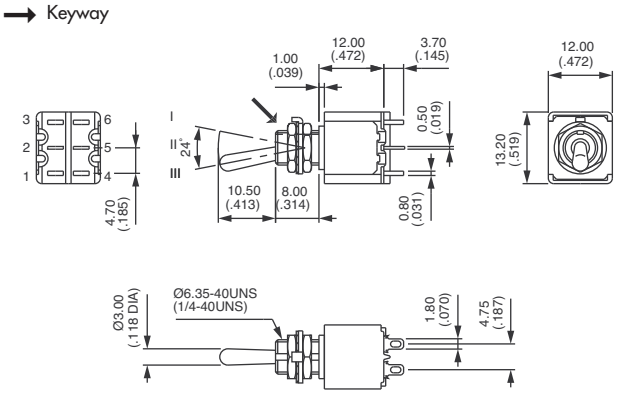

* Function 4 : SP in DP case - specify CT or TH connections, see end of catalogue.

Three pole

	III	II	I
	2-3		1-2
	5-6		4-5
	8-9		7-8
5656	ON	-	ON
5659	ON	OFF	ON
5657	MOM	OFF	MOM
5658	ON	OFF	MOM
5652	ON	-	MOM

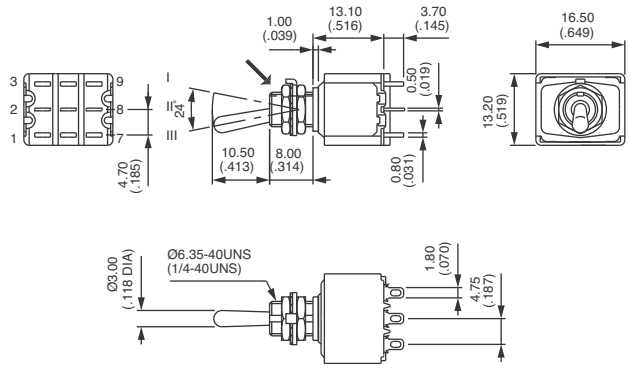

5000 series

Toggle switches - solder lug terminals

Threaded bushing Ø 6,35 (1/4) : 5600

MODEL STRUCTURE

A

Four pole

	III	II	I
	2-3		1-2
	5-6		4-5
	8-9		7-8
	11-12		10-11
5666	ON	-	ON
5669	ON	OFF	ON
5667	MOM	OFF	MOM
5668	ON	OFF	MOM
5662	ON	-	MOM
5664*	ON	ON	ON
5664 1R*	ON	ON	MOM
5664 2R*	MOM	ON	MOM

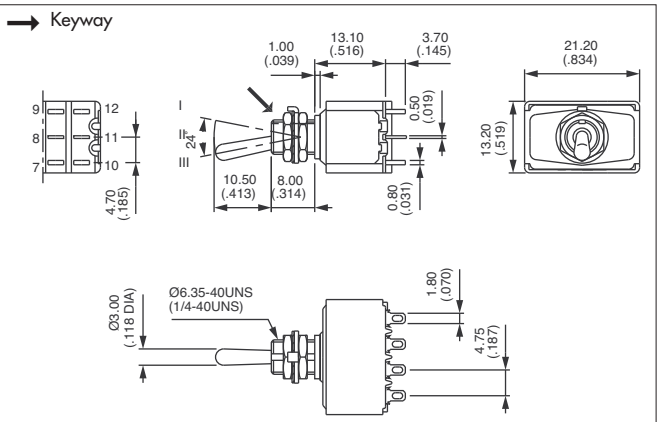

*Function 4 : DP in 4P case - specify CT or TH connections, see end of catalogue.

PANEL CUT-OUT

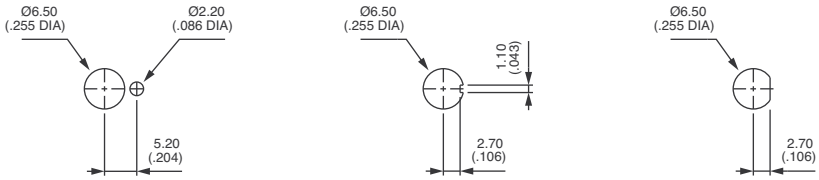

Standard | With **K** sealing option | With **X408** sealing option

Diagram as per 5600 model

5700 models

- **Flatted bushing Ø 6,35 mm (1/4)**
- 1, 2, 3 and 4 pole configurations

MODEL STRUCTURE

For model structure numbers, refer to **5600** models and replace 6 with 7.

PANEL CUT-OUT

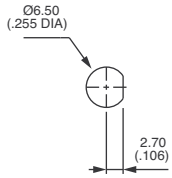

Standard or
with **K** sealing option

Diagram as per 5600 model

5500 models

- **Threaded bushing Ø 6 mm x 0.75 SI (.236 x 0.75 IS)**
- 1, 2, 3 and 4 pole configurations

MODEL STRUCTURE

For model structure numbers, refer to **5600** models and replace 6 with 5.

PANEL CUT-OUT

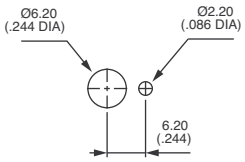

Standard

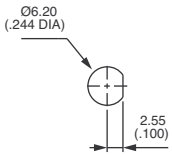

With **X408** sealing option

5000 series

Toggle switches - solder lug terminals

Threaded bushing Ø 11,9 (15/32) : 5600M

MODEL STRUCTURE

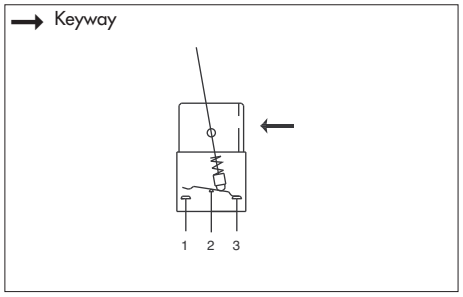

- 1, 2, 3 and 4 pole configurations
- Supplied with 2 hex nuts and 1 locking ring
- Panel thickness up to 6 mm (.236)

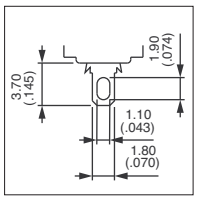

MODEL STRUCTURE

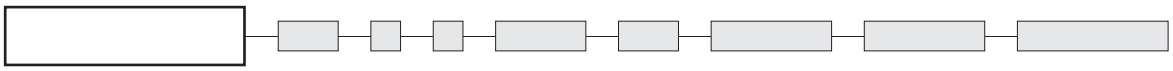

Shown with standard lever

Single pole

	III	II	I
	2-3		1-2
5636M	ON	-	ON
5639M	ON	OFF	ON
5637M	MOM	OFF	MOM
5638M	ON	OFF	MOM
5632M	ON	-	MOM

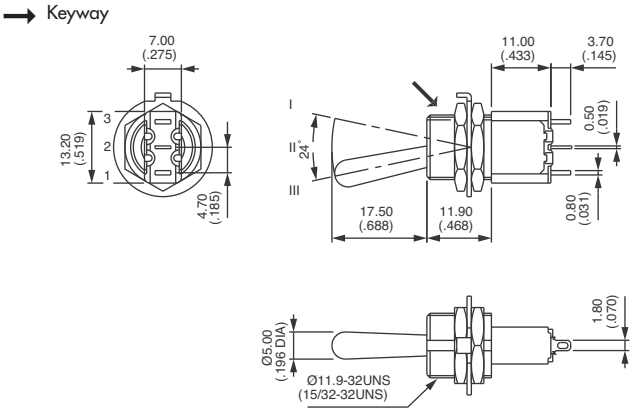

Double pole

	III	II	I
	2-3		1-2
	5-6		4-5
5646M	ON	-	ON
5649M	ON	OFF	ON
5647M	MOM	OFF	MOM
5648M	ON	OFF	MOM
5642M	ON	-	MOM
5644M*	ON	ON	ON
5644M 1R*	ON	ON	MOM
5644M 2R*	MOM	ON	MOM

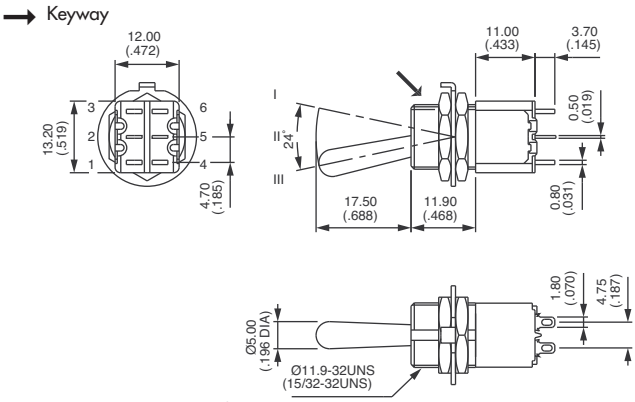

* Function 4 : SP in DP case - specify CT or TH connections, see end of catalogue.

Three pole

	III	II	I
	2-3		1-2
	5-6		4-5
	8-9		7-8
5656M	ON	-	ON
5659M	ON	OFF	ON
5657M	MOM	OFF	MOM
5658M	ON	OFF	MOM
5652M	ON	-	MOM

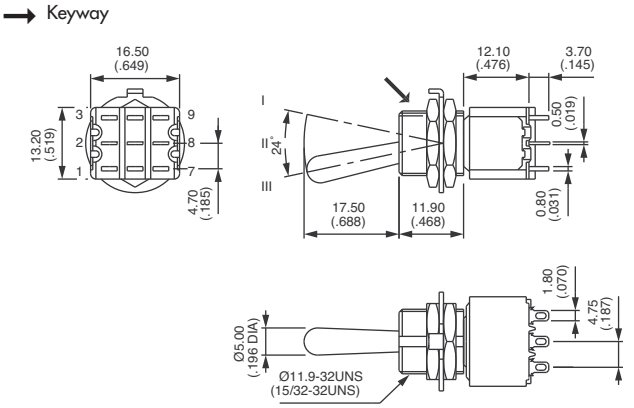

5000 series

Toggle switches - solder lug terminals

Threaded bushing Ø 11,9 (15/32) : 5600M

Four pole

	III	II	I
	2-3		1-2
	5-6		4-5
	8-9		7-8
	11-12		10-11
5666M	ON	-	ON
5669M	ON	OFF	ON
5667M	MOM	OFF	MOM
5668M	ON	OFF	MOM
5662M	ON	-	MOM
5664M*	ON	ON	ON
5664M 1R*	ON	ON	MOM
5664M 2R*	MOM	ON	MOM

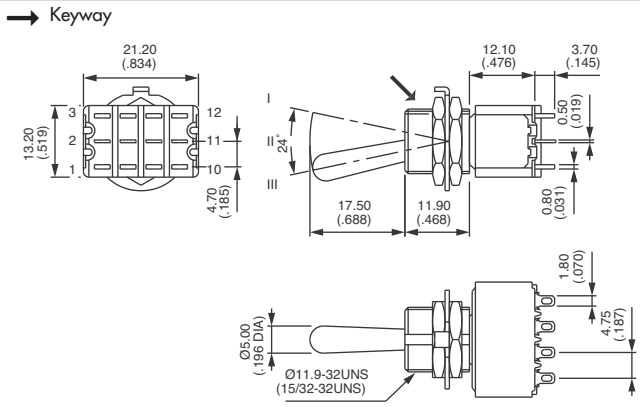

*Function 4 : DP in 4P case - specify CT or TH connections, see end of catalogue.

PANEL CUT-OUT

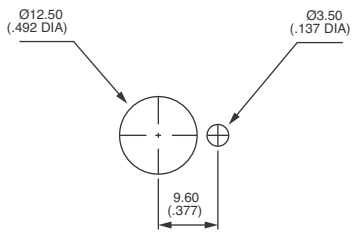

Standard

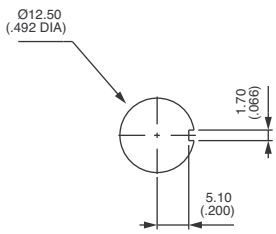

With **K** sealing option

OTHER : M bushing can be combined with other types such as : 5200, Z, MIWR... Consult factory.

5000 series

Toggle switches - straight PC terminals

Threaded bushing Ø 6,35 (1/4) : 5200

MODEL STRUCTURE

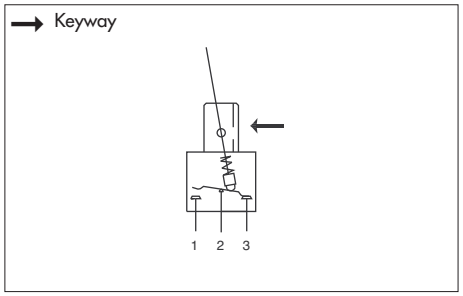

- **Terminal spacing 4,7 mm (.185)**
- 1, 2, 3 and 4 pole configurations
- Epoxy sealed terminals standard

For new projects, we recommend switches with support bracket (option Y) which holds the switch securely on the PCB.

Other terminal lengths presented under "Special options".

Also available with plain bushing, see "Special options" X371

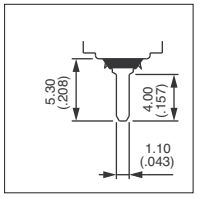

A

MODEL STRUCTURE

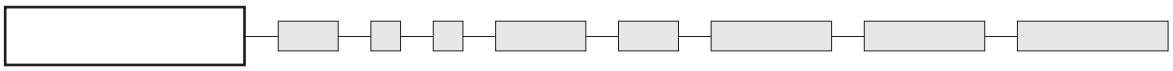

Shown with standard lever

Single pole

	III	II	I
	2-3		1-2
5236 B	ON	-	ON
5239 B	ON	OFF	ON
5237 B	MOM	OFF	MOM
5238 B	ON	OFF	MOM
5232 B	ON	-	MOM

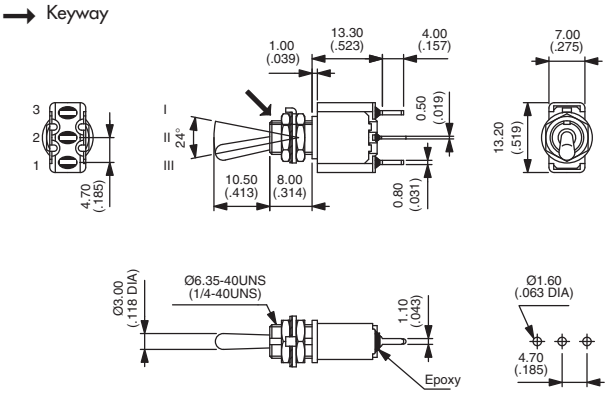

Double pole

	III	II	I
	2-3		1-2
	5-6		4-5
5246 B	ON	-	ON
5249 B	ON	OFF	ON
5247 B	MOM	OFF	MOM
5248 B	ON	OFF	MOM
5242 B	ON	-	MOM
5244 B*	ON	ON	ON
5244 1R B*	ON	ON	MOM
5244 2R B*	MOM	ON	MOM

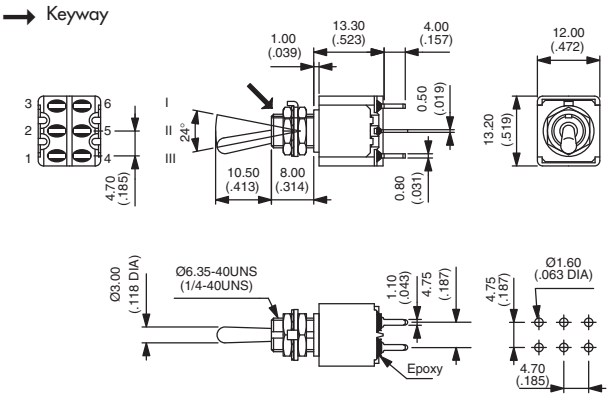

*Function 4 : SP in DP case - specify CT or TH connections, see end of catalogue.

Three pole

	III	II	I
	2-3		1-2
	5-6		4-5
	8-9		7-8
5256 B	ON	-	ON
5259 B	ON	OFF	ON
5257 B	MOM	OFF	MOM
5258 B	ON	OFF	MOM
5252 B	ON	-	MOM

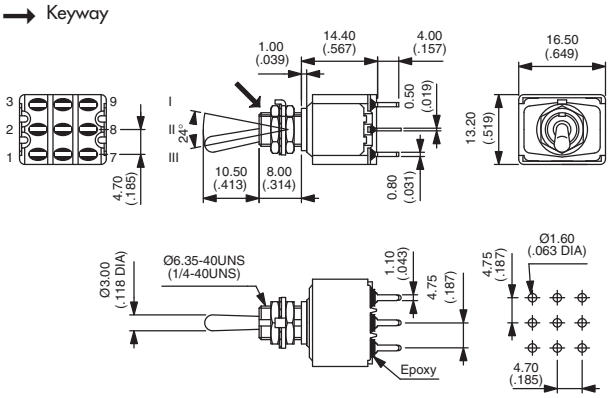

5000 series

Toggle switches - straight PC terminals

Threaded bushing Ø 6,35 (1/4) : 5200 - 5000

Four pole

	III	II	I
	2-3		1-2
	5-6		4-5
	8-9		7-8
	11-12		10-11
5266 B	ON	-	ON
5269 B	ON	OFF	ON
5267 B	MOM	OFF	MOM
5268 B	ON	OFF	MOM
5262 B	ON	-	MOM
5264 B*	ON	ON	ON
5264 1R B*	ON	ON	MOM
5264 2R B*	MOM	ON	MOM

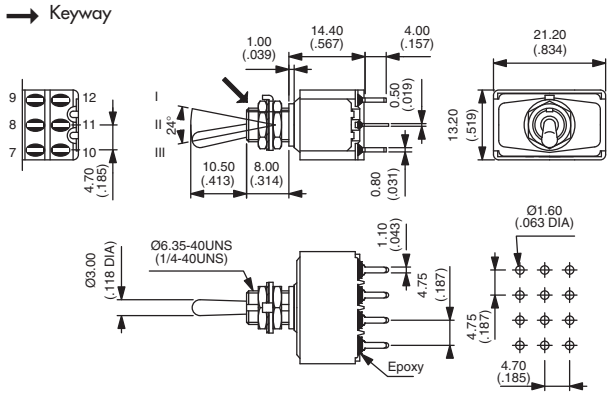

*Function 4 : DP in 4P case - specify CT ot TH connections, see end of catalogue.

PANEL CUT-OUT

5200 - 5000 - 5400

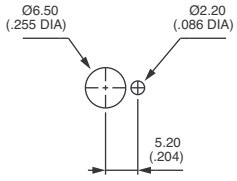

Standard

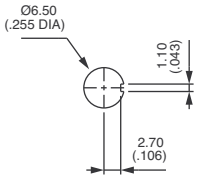

With **K** sealing option

Diagram as per 5200 model

5000 models

- **Terminal spacing 5,08 mm (.200)**
- Epoxy sealed terminals standard
- 1 and 2 pole configurations

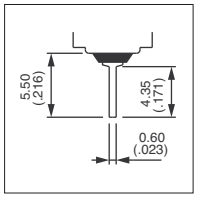

MODEL STRUCTURE

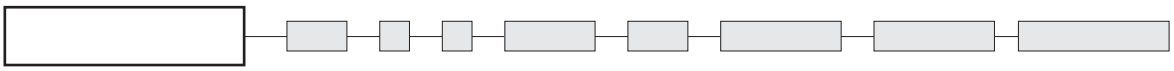

Shown with standard lever

Terminal spacing 5,08 (.200) - single and double pole

		III	II	I
		2-3		1-2
		5-6		4-5
Single pole	Double pole			
5036	**5046**	ON	-	ON
5039	**5049**	ON	OFF	ON
5037	**5047**	MOM	OFF	MOM
5038	**5048**	ON	OFF	MOM
5032	**5042**	ON	-	MOM
	5044*	ON	ON	ON
	5044 1R*	ON	ON	MOM
	5044 2R*	MOM	ON	MOM

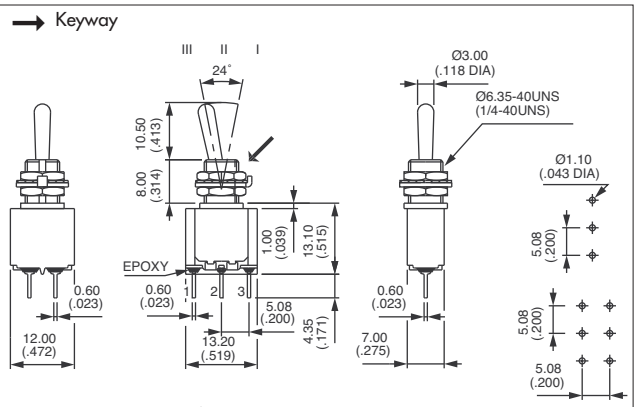

*Function 4 : SP in DP case - specify CT or TH connections, see end of catalogue.

A

Diagram, as per 5200 model

5400 models

- **Threaded bushing Ø 6,35 mm (1/4)**
- **Terminal spacing 4 mm (.157)**
- 1, 2, 3 and 4 pole configurations

MODEL STRUCTURE

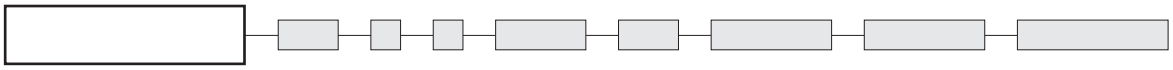

For model structure numbers, refer to **5200** models and replace 2 with 4.

Panel cut-out, see 5200.

Flat

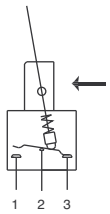

5900 models

- **Flatted bushing Ø 6,35 mm (1/4)**
- **Terminal spacing 4,7 mm (.185)**
- 1, 2, 3 and 4 pole configurations

MODEL STRUCTURE

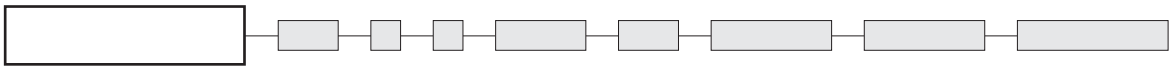

For model structure numbers, refer to **5200** models and replace 2 with 9.

PANEL CUT-OUT

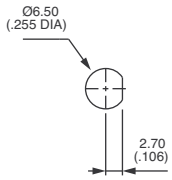

Standard or
with **K** sealing option

Diagram, as per 5200 model

5100 models

- **Threaded bushing Ø 6 mm x 0.75 SI (.236 x 0.75 IS)**
- **Terminal spacing 4,7 mm (.185)**
- 1, 2, 3 and 4 pole configurations

MODEL STRUCTURE

For model structure numbers, refer to **5200** models and replace 2 with 1.
Panel cut-out, see below.

Diagram, as per 5200 model

5300 models

- **Threaded bushing Ø 6 mm x 0.75 SI (.236 x 0.75 IS)**
- **Terminal spacing 4 mm (.157)**
- 1, 2, 3 and 4 pole configurations

MODEL STRUCTURE

For model structure numbers, refer to **5200** models and replace 2 with 3.

PANEL CUT-OUT

5100 - 5300

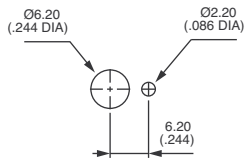

Standard

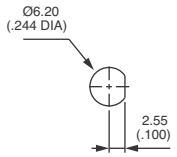

With **X408** sealing option

5000 series

Toggle switches - quick-connect terminals

Threaded bushing Ø 6,35 (1/4) : 5200Z

MODEL STRUCTURE

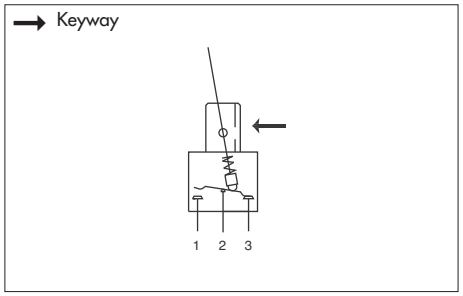

- **Terminal spacing 4,7 mm (.185)**
- Epoxy sealed terminals standard
- 1and 2 pole configurations

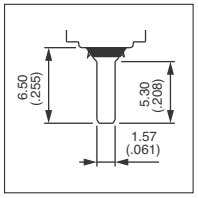

A

MODEL STRUCTURE

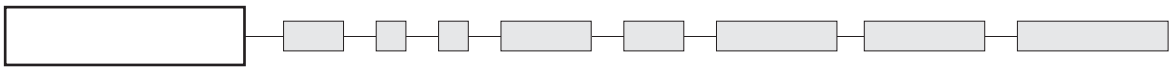

Shown with standard lever

Single pole

	III	II	I
	2-3		1-2
5236Z	ON	-	ON
5239Z	ON	OFF	ON
5237Z	MOM	OFF	MOM
5238Z	ON	OFF	MOM
5232Z	ON	-	MOM

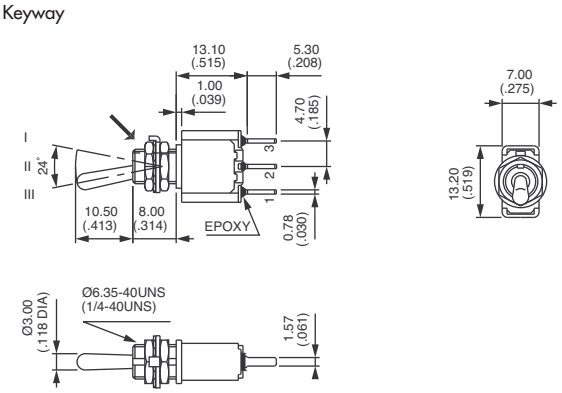

Double pole

	III	II	I
	2-3		1-2
	5-6		4-5
5246Z	ON	-	ON
5249Z	ON	OFF	ON
5247Z	MOM	OFF	MOM
5248Z	ON	OFF	MOM
5242Z	ON	-	MOM
5244Z*	ON	ON	ON
5244Z 1R*	ON	ON	MOM
5244Z 2R*	MOM	ON	MOM

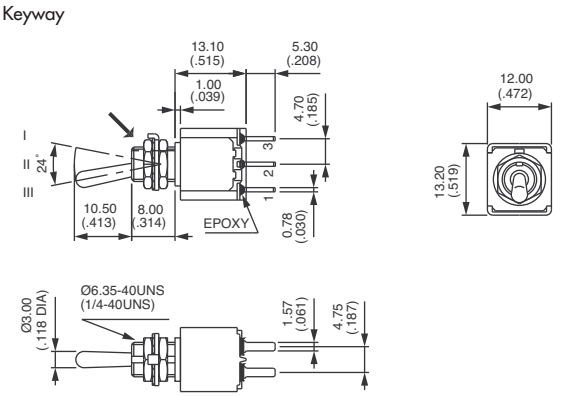

*Function 4 : SP in DP case - specify CT or TH connections, see end of catalogue.

PANEL CUT-OUT

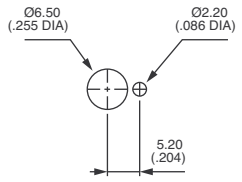

Standard

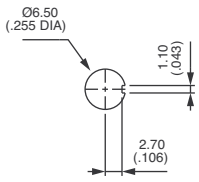

With **K** sealing option

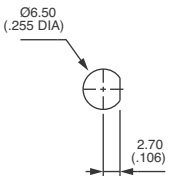

With **X408** sealing option

5900Z models

Diagram, as per 5900 model

- **Flatted bushing Ø 6,35 mm (1/4)**
- Terminal spacing 4,7 mm (.185)
- Epoxy sealed terminals standard
- 1and 2 pole configurations

MODEL STRUCTURE

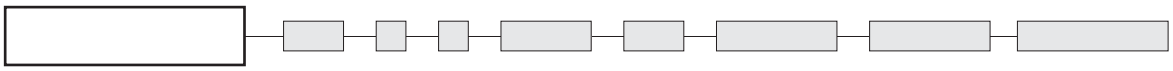

For model structure numbers, refer to **5200Z** models and replace 2 with 9.

PANEL CUT-OUT

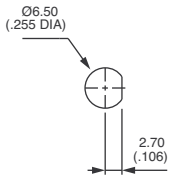

Standard or
with **K** sealing option

5100Z models

Diagram, as per 5200 model

- **Threaded bushing Ø 6 mm x 0.75 SI (.236 x 0.75 IS)**
- Terminal spacing 4,7 mm (.185)
- Epoxy sealed terminals standard
- 1and 2 pole configurations

MODEL STRUCTURE

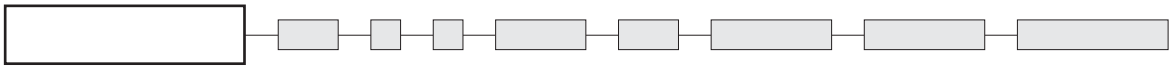

For model structure numbers, refer to **5200Z** models and replace 2 with 1.

PANEL CUT-OUT

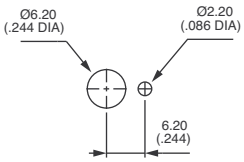

Standard

5000 series

Toggle switches - wire-wrap terminals

Threaded bushing Ø 6,35 (1/4) : 5200MIWR

MODEL STRUCTURE

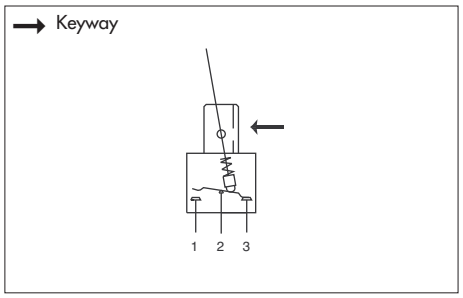

- **Terminal spacing 5,08 mm (.200)**
- Epoxy sealed terminals standard
- 1and 2 pole configurations
- Can also be used as extended PCB terminals

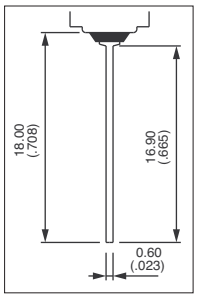

A

MODEL STRUCTURE

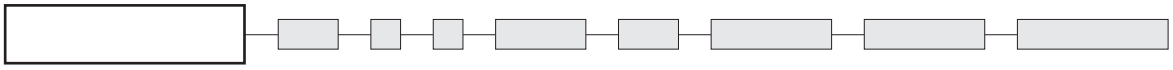

Shown with standard lever

Terminal spacing 5,08 (.200) - single pole

	III	II	I
	2-3		1-2
5236MIWR	ON	-	ON
5239MIWR	ON	OFF	ON
5237MIWR	MOM	OFF	MOM
5238MIWR	ON	OFF	MOM
5232MIWR	ON	-	MOM

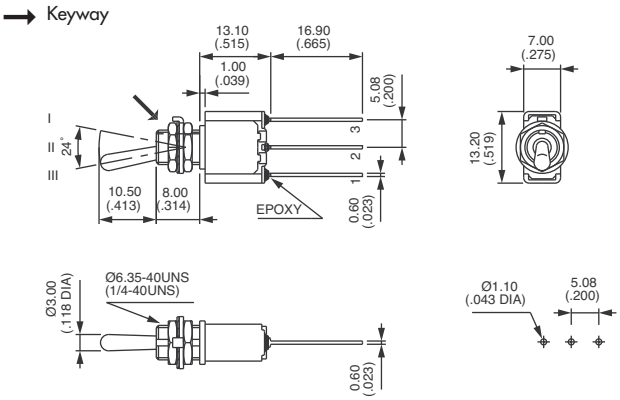

Terminal spacing 5,08 (.200) - double pole

	III	II	I
	2-3		1-2
	5-6		4-5
5246MIWR	ON	-	ON
5249MIWR	ON	OFF	ON
5247MIWR	MOM	OFF	MOM
5248MIWR	ON	OFF	MOM
5242MIWR	ON	-	MOM
5244 MIWR*	ON	ON	ON
5244 1R MIWR*	ON	ON	MOM
5244 2R MIWR*	MOM	ON	MOM

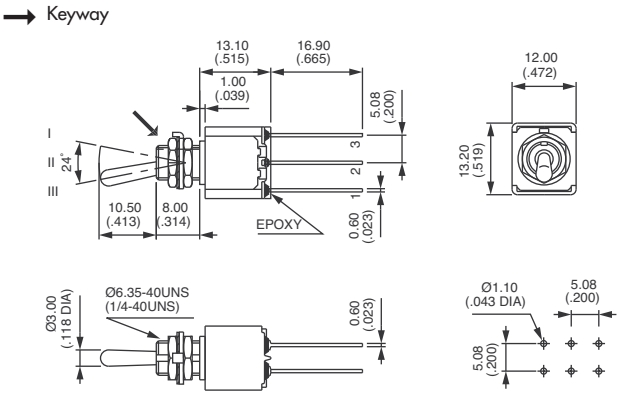

*Function 4 : SP in DP case - specify CT or TH connections, see end of catalogue.

PANEL CUT-OUT

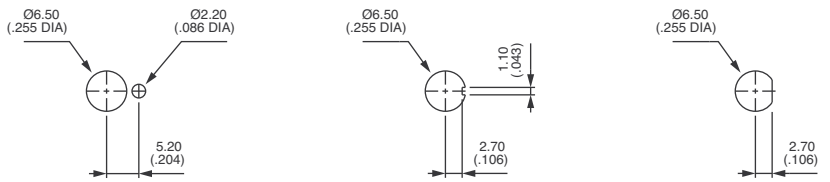

Standard | With **K** sealing option | With **X408** sealing option

5000 series

Toggle switches - plain bushing

Right angle terminals - horizontal : 5200W

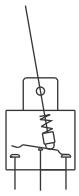

- **Terminal spacing 4,7 mm (.185)**
- 1, 2 and 3 pole configurations

Special switch **5200WX404** with reduced overall dimensions is presented under "Special options".

MODEL STRUCTURE

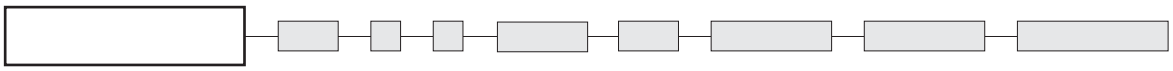

Shown with standard lever

Single pole

	III	II	I
	2-3		1-2
5236W	ON	-	ON
5239W	ON	OFF	ON
5237W	MOM	OFF	MOM
5238W	ON	OFF	MOM
5232W	ON	-	MOM

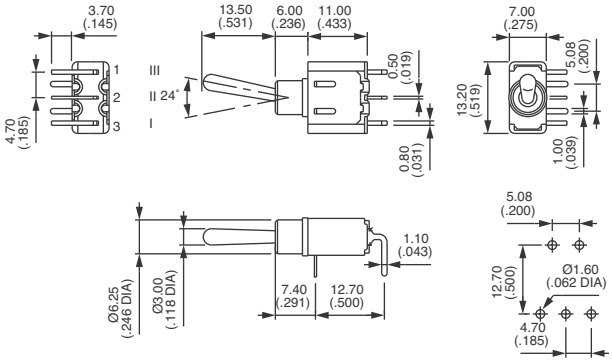

Double pole

	III	II	I
	2-3		1-2
	5-6		4-5
5246W	ON	-	ON
5249W	ON	OFF	ON
5247W	MOM	OFF	MOM
5248W	ON	OFF	MOM
5242W	ON	-	MOM
5244W*	ON	ON	ON
5244W 1R*	ON	ON	MOM
5244W 2R*	MOM	ON	MOM

*Function 4 : SP in DP case - specify CT or TH connections, see end of catalogue.

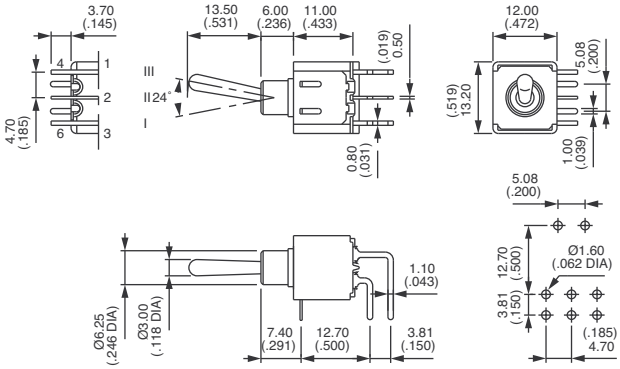

Three pole

	III	II	I
	2-3		1-2
	5-6		4-5
	8-9		7-8
5256W	ON	-	ON
5259W	ON	OFF	ON
5257W	MOM	OFF	MOM
5258W	ON	OFF	MOM
5252W	ON	-	MOM

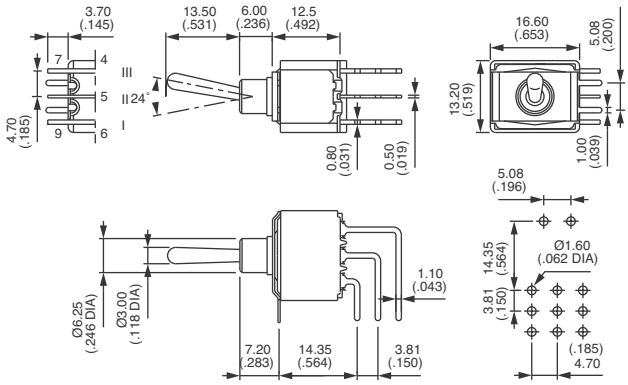

5000 series

Toggle switches - plain bushing

Right angle terminals - horizontal : 5400W

MODEL STRUCTURE

A

PCB MOUNTING FOR 5200W

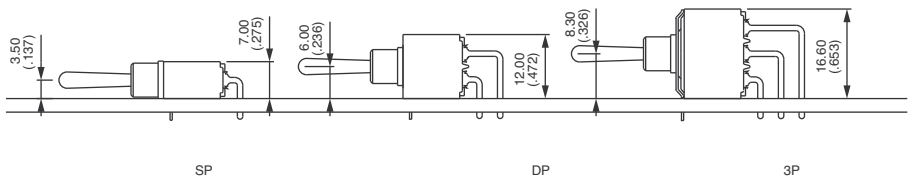

Diagram, as per 5200W model

5400W models

- **Terminal spacing 4 mm (.157)**
- 1and 2 pole configurations

MODEL STRUCTURE

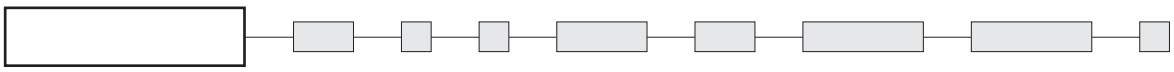

For model structure numbers, refer to **5200W** single and double pole and replace 2 with 4.

PC LAYOUT

5000 series

Toggle switches - plain bushing

Right angle terminals - vertical : 5200WW

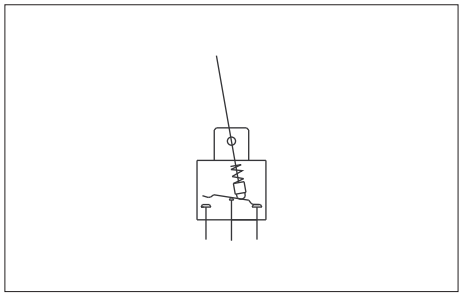

- **Pin spacing 3,81 mm (.150)**
- 1, 2, 3 and 4 pole configurations

MODEL STRUCTURE

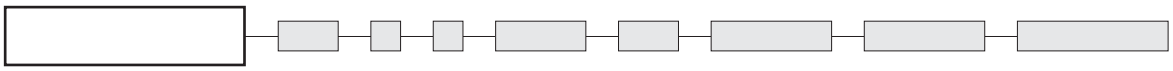

Shown with standard lever

Single pole

	III 2-3	II	I 1-2
5236WW	ON	-	ON
5239WW	ON	OFF	ON
5237WW	MOM	OFF	MOM
5238WW**	ON	OFF	MOM
5232WW**	ON	-	MOM

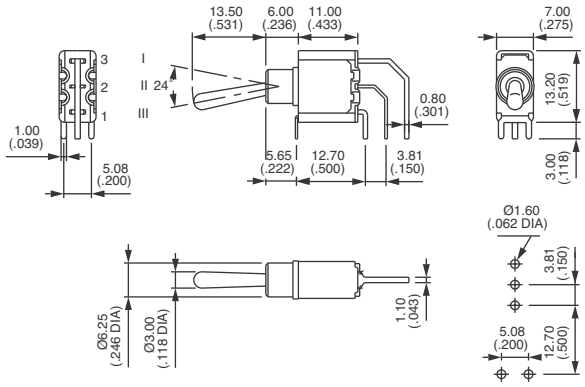

Double pole

	III 2-3 5-6	II	I 1-2 4-5
5246WW	ON	-	ON
5249WW	ON	OFF	ON
5247WW	MOM	OFF	MOM
5248WW**	ON	OFF	MOM
5242WW**	ON	-	MOM
5244WW*	ON	ON	ON
5244WW 1R*	ON	ON	MOM
5244WW 2R*	MOM	ON	MOM

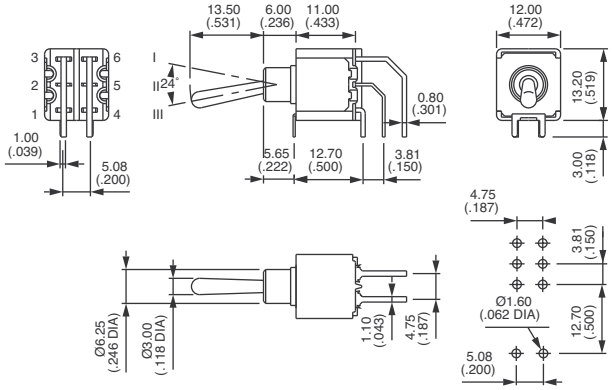

Three pole

	III 2-3 5-6 8-9	II	I 1-2 4-5 7-8
5256WW	ON	-	ON
5259WW	ON	OFF	ON
5257WW	MOM	OFF	MOM
5258WW**	ON	OFF	MOM
5252WW**	ON	-	MOM

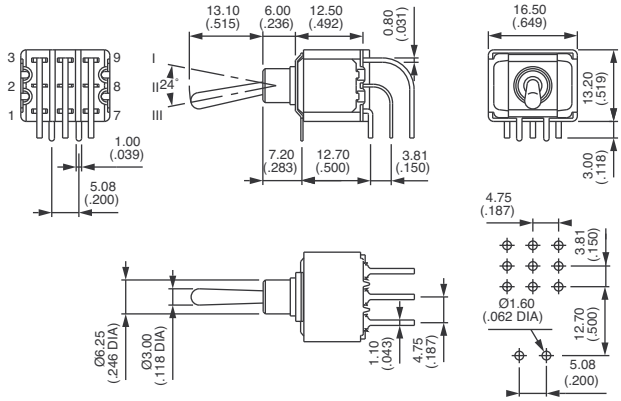

* and ** : see notes next page.

5000 series

Toggle switches - plain bushing

Right angle terminals - vertical : 5200WW - 5400WW

MODEL STRUCTURE

A

Four pole

	III	II	I
	2-3		1-2
	5-6		4-5
	8-9		7-8
	11-12		10-11
5266WW	ON	-	ON
5269WW	ON	OFF	ON
5267WW	MOM	OFF	MOM
5268WW**	ON	OFF	MOM
5262WW**	ON	-	MOM
5264WW*	ON	ON	ON
5264WW 1R*	ON	ON	MOM
5264WW 2R*	MOM	ON	MOM

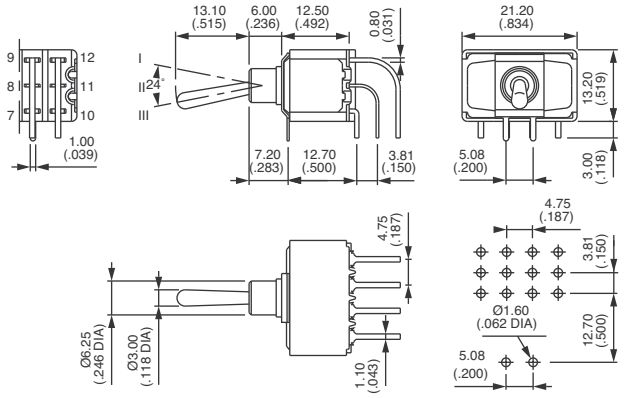

* Function 4 : SP in DP case, DP in 4P case - specify CT or TH connections, see end of catalogue.
** Functions 2 and 8 : reversed connection available, consult factory.

PCB MOUNTING

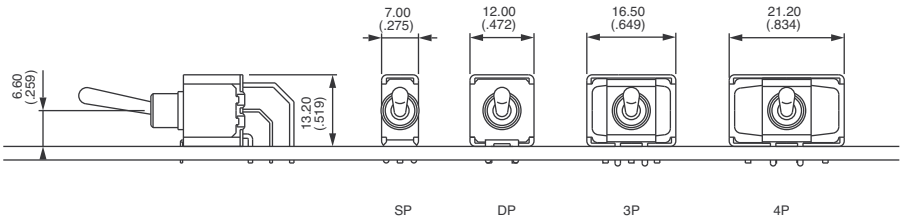

Diagram as per 5200WW model

5400WW models

- **Pin spacing 2,54 mm (.100)**
- 1, 2, 3 and 4 pole configurations

MODEL STRUCTURE

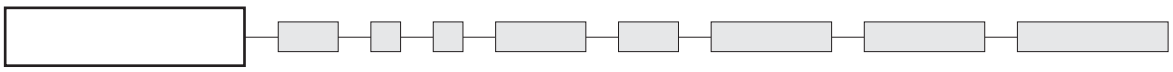

For model structure numbers, refer to **5200WW** models and replace 2 with 4.

PC LAYOUT

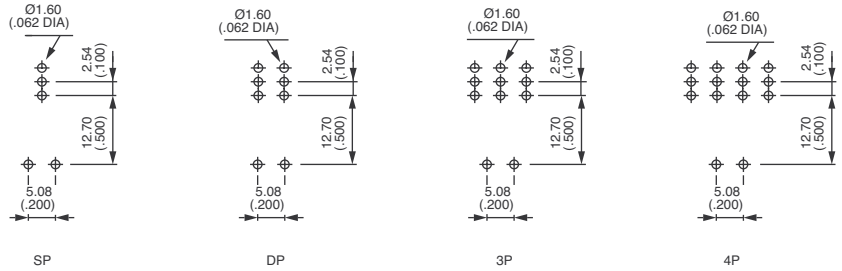

5000 series

Toggle switches - plain bushing

Straight PC terminals - bracket mounting : 5200Y

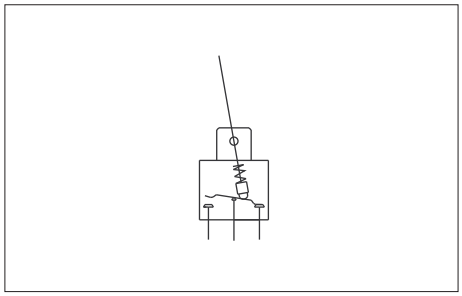

Brackets reduce mechanical stress on solder joints and increase resistance to vibrations.
Bracket material : tin plated steel.

- Epoxy sealed terminals standard
- 1and 2 pole configurations

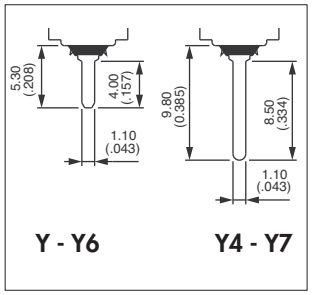

A

MODEL STRUCTURE

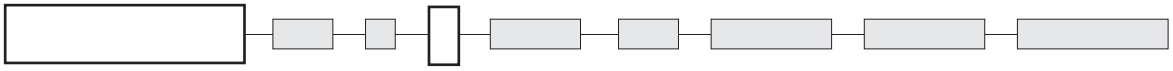

Shown with standard lever

Short bracket - width 15,75 (.620) - single pole : 5230Y

	III	II	I
	2-3		1-2
5236Y B	ON	-	ON
5239Y B	ON	OFF	ON
5237Y B	MOM	OFF	MOM
5238Y B	ON	OFF	MOM
5232Y B	ON	-	MOM

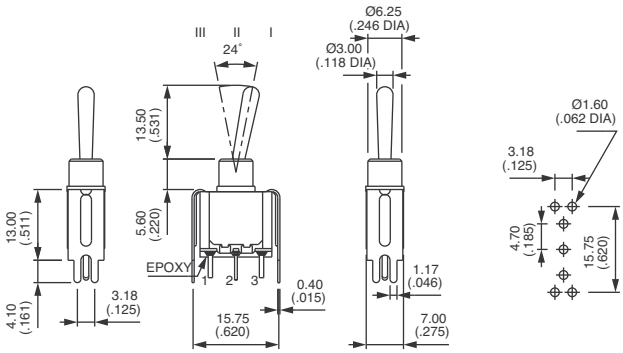

Short bracket - width 15,75 (.620) - double pole : 5240Y

	III	II	I
	2-3		1-2
	5-6		4-5
5246Y B	ON	-	ON
5249Y B	ON	OFF	ON
5247Y B	MOM	OFF	MOM
5248Y B	ON	OFF	MOM
5242Y B	ON	-	MOM
5244Y B*	ON	ON	ON
5244Y 1R B*	ON	ON	MOM
5244Y 2R B*	MOM	ON	MOM

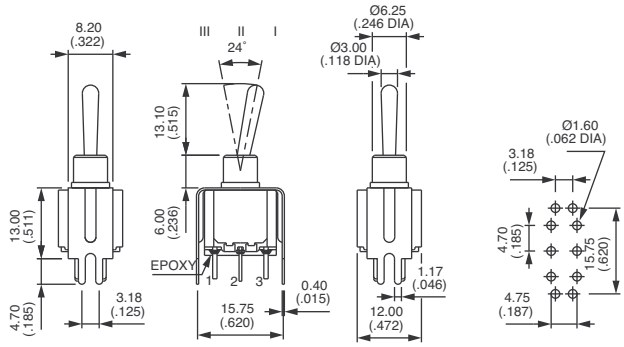

* Function 4 : SP in DP case - specify CT or TH connections, see end of catalogue.

5000 series

Toggle switches - plain bushing

Straight PC terminals - bracket mounting : 5200Y4 - Y6 - Y7

MODEL STRUCTURE

A

Tall bracket - width 15,75 (.620) : 5200Y4

		III	II	I
		2-3		1-2
		5-6		4-5
Single pole	Double pole			
5236Y4 B	**5246Y4 B**	ON	-	ON
5239Y4 B	**5249Y4 B**	ON	OFF	ON
5237Y4 B	**5247Y4 B**	MOM	OFF	MOM
5238Y4 B	**5248Y4 B**	ON	OFF	MOM
5232Y4 B	**5242Y4 B**	ON	-	MOM
	5244Y4 B*	ON	ON	ON
	5244Y4 1R B*	ON	ON	MOM
	5244Y4 2R B*	MOM	ON	MOM

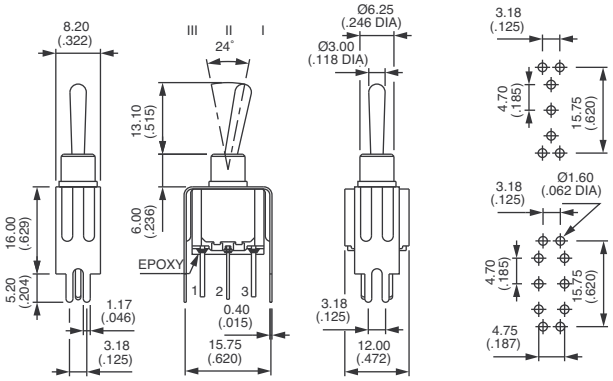

Short bracket - width 19,05 (.750) : 5200Y6

		III	II	I
		2-3		1-2
		5-6		4-5
Single pole	Double pole			
5236Y6 B	**5246Y6 B**	ON	-	ON
5239Y6 B	**5249Y6 B**	ON	OFF	ON
5237Y6 B	**5247Y6 B**	MOM	OFF	MOM
5238Y6 B	**5248Y6 B**	ON	OFF	MOM
5232Y6 B	**5242Y6 B**	ON	-	MOM
	5244Y6 B*	ON	ON	ON
	5244Y6 1R B*	ON	ON	MOM
	5244Y6 2R B*	MOM	ON	MOM

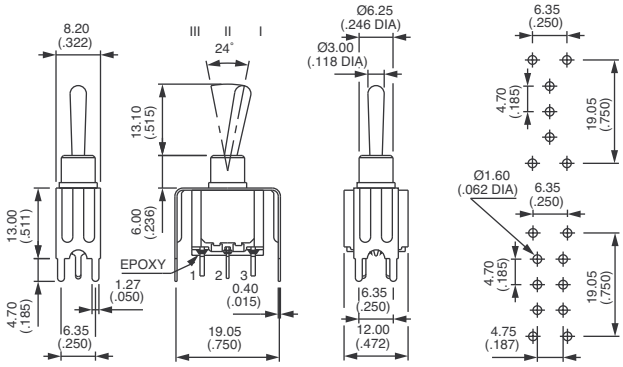

Tall bracket - width 19,05 (.750) : 5200Y7

		III	II	I
		2-3		1-2
		5-6		4-5
Single pole	Double pole			
5236Y7 B	**5246Y7 B**	ON	-	ON
5239Y7 B	**5249Y7 B**	ON	OFF	ON
5237Y7 B	**5247Y7 B**	MOM	OFF	MOM
5238Y7 B	**5248Y7 B**	ON	OFF	MOM
5232Y7 B	**5242Y7 B**	ON	-	MOM
	5244Y7 B*	ON	ON	ON
	5244Y7 1R B*	ON	ON	MOM
	5244Y7 2R B*	MOM	ON	MOM

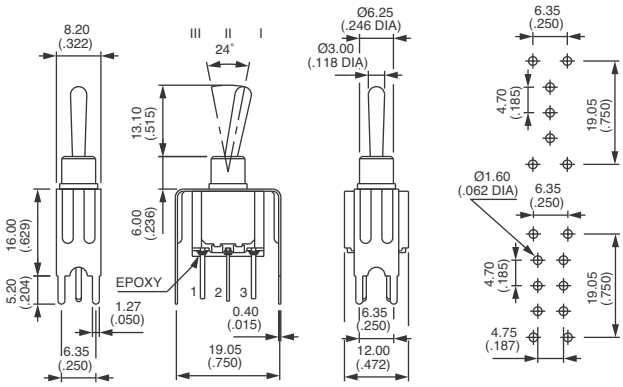

* Function 4 : SP in DP case - specify CT or TH connections, see end of catalogue.

CONTACT MATERIALS

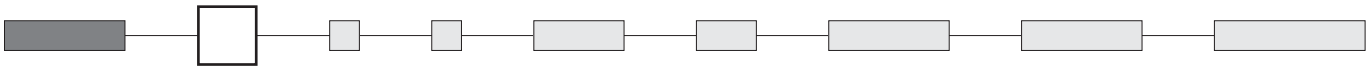

A Silver
AD Silver, gold plated
CD Brass, gold plated

Special contacts for peak currents : see X814, under “Special Options”.

FINISH

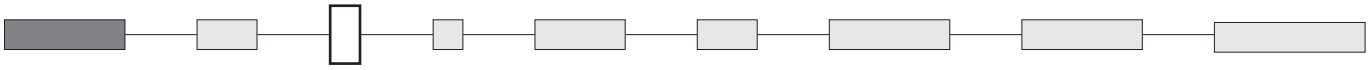

Blank Nickel plated
G Black finish on bushing, actuator and hardware

SEALING

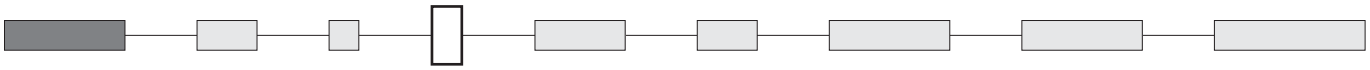

Blank
- For 5000 - 5200Z and 5200MIWR models : epoxy sealed terminals standard
- Other models : no sealing required

B Epoxy sealed terminals

K Front panel sealing by one O-ring and sealing washer. Protects the switch against water and dust.
Panel seal withstands 1 bar pressure and remains sealed even when switch is operated.

Available on models with Ø 6,35 (1/4) or 11,9 (15/32) **threaded bushing only.**
Not available with levers 8, 9, 12, 22, 23.

KB Combined sealings

① O-ring
② Sealing washer

K with Ø 6,35 (1/4) keyway bushing

Includes washer
U360

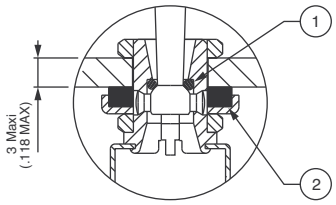

K with Ø 6,35 (1/4) flatted bushing

Includes washer
U5141

K with Ø 11,9 (15/32) keyway bushing

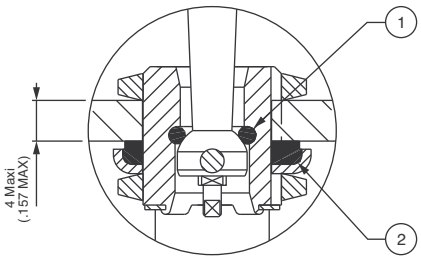

Includes washer
U60

Sealing by two O-rings, see X408 under "Special options".

A

FLUORESCENT TIP

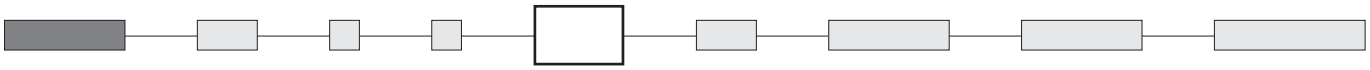

Blank None

-038 White fluorescent tip.
Becomes luminous when submitted to ultraviolet rays.

Available with matt black finish (option G) only.

Consult factory for levers available with this option.

Standard lever

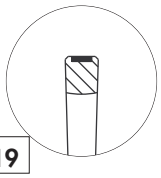

Locking lever

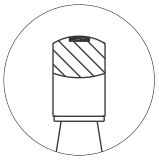

-19

Same dimensions as standard actuator below.

ACTUATORS

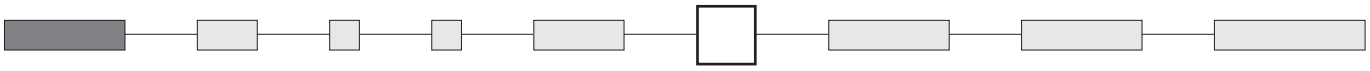

Dash compulsory before lever code.

Levers for threaded bushing models Ø 6,35 (1/4) or Ø 6 (.236)

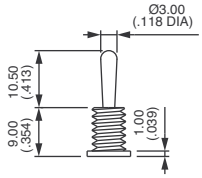

Blank
Standard

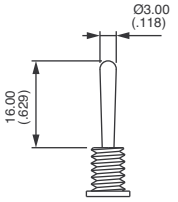

-2

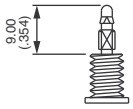

-4N
For use with paddles only

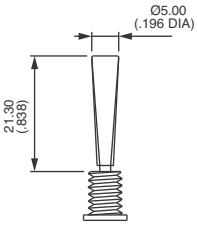

-8
Not available with sealing options K or X408

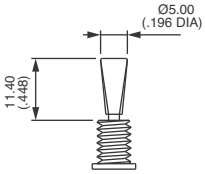

-9
Not available with sealing options K or X408

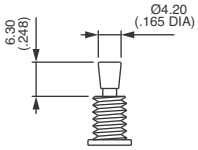

-12
Not available with sealing options K or X408

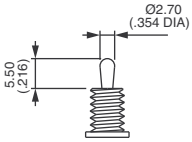

-16

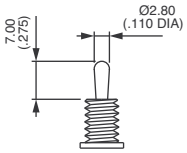

-17

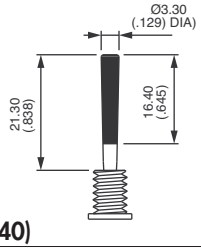

-21 (+U640)
U640 to be placed in last box of ordering format. Replace 0 by colour code.

ACTUATORS (continued)

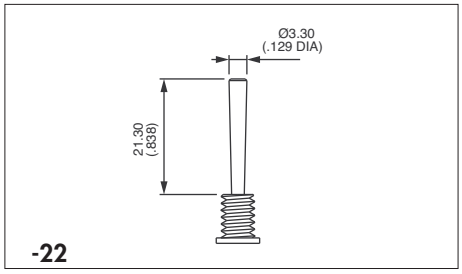

Not available with sealing options K or X408

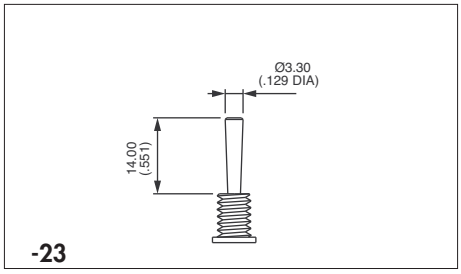

Not available with sealing options K or X408

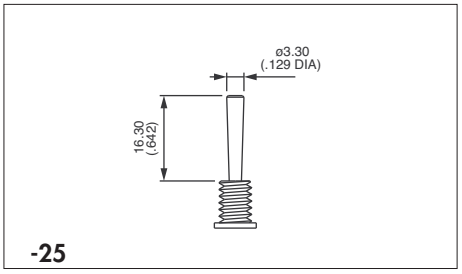

Not available with sealing options K or X408

Levers for threaded bushing models Ø 11,9 (15/32) : 5600M

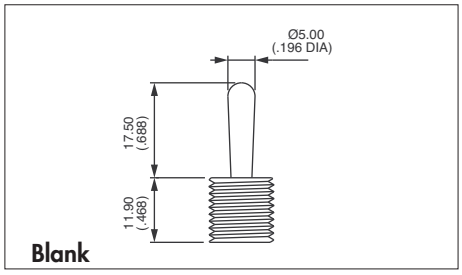

Standard

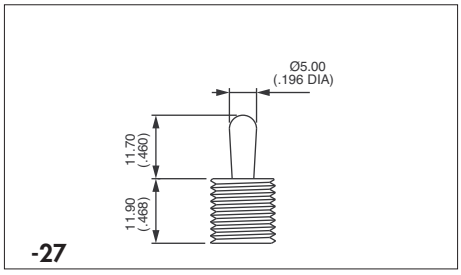

Locking levers

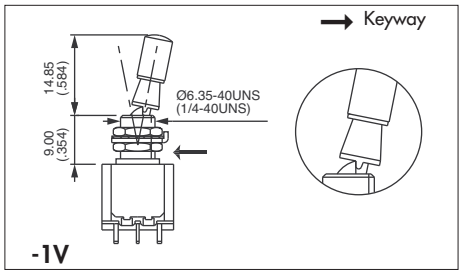

1 locked position (function 6)

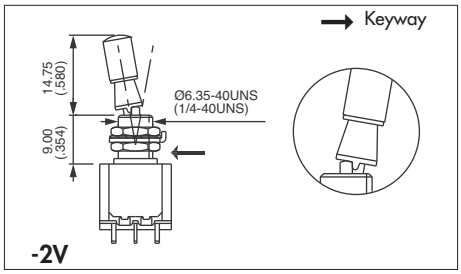

2 locked positions (function 6)

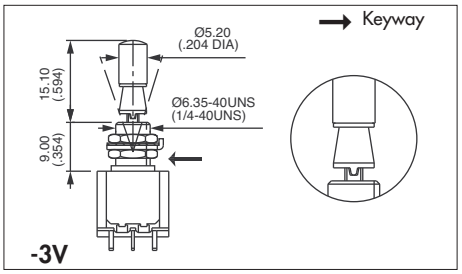

3 locked positions (functions 9 and 4)

Consult factory for other locking lever options.

Available with Ø 6,35 mm (1/4) threaded bushing models only.
For plain bushing models, see X386 or X916 under "Special options" on the following pages.

A

ACTUATORS (continued)

For plain bushing models : W - WW and Y

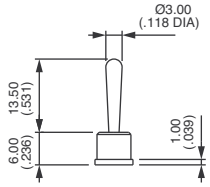

Blank

Standard

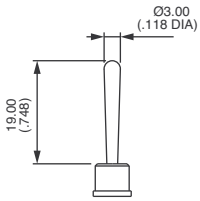

-2

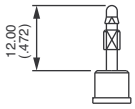

-4N

For use with paddles only

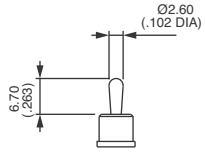

-7

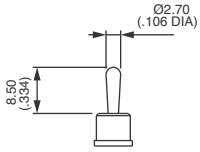

-16

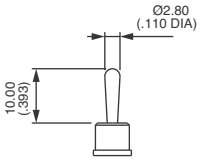

-17

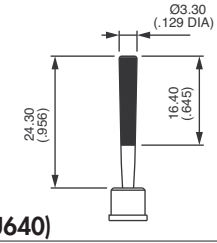

-21 (+U640)

U640 to be placed in last box of ordering format. Replace 0 by colour code.

Actuator colours	
Replace "0" by number	
1	blue
1/4	dark blue
2	black
3	green
4	grey
5	yellow
6	red
7	ivory
7/1	white
9	orange

LEVER LENGTH

With bracket or mounting plate lever length will be reduced by 0,4 mm (.015) as a rule. Please refer to switch technical drawings in "Model Structure" pages for details.

SPECIAL OPTIONS

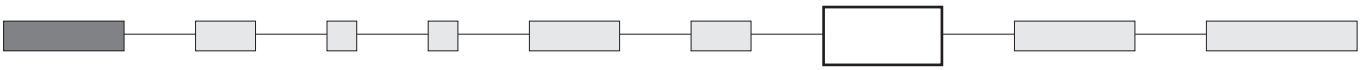

Blank No special requirement

X408 Front panel sealing by two O-rings. Flatted bushing for precise orientation.
Protects the switch against water and dust.
Panel seal withstands 1 bar pressure and remains sealed even when switch is operated. Includes sealed terminals (option B).

Available only on models with threaded bushing except 5600M.
Not available with levers 8, 9, 12, 22, 23.

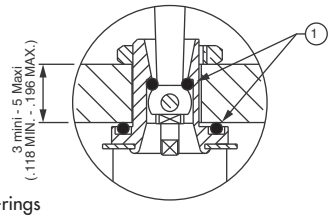

① O-rings

X404 **Horizontal right angle with reduced overall dimensions**
(shown with lever -16)

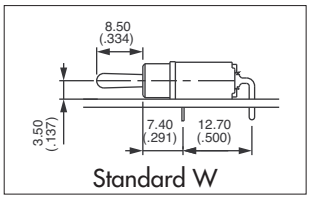

Standard W

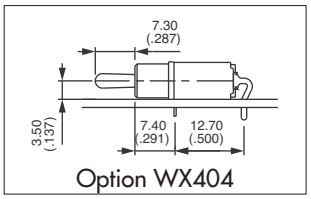

Option WX404

Single pole	Double pole	III 2-3 5-6	II	I 1-2 4-5
5236W X404	**5246W X404**	ON	-	ON
5239W X404	**5249W X404**	ON	OFF	ON
5237W X404	**5247W X404**	MOM	OFF	MOM
5238W X404	**5248W X404**	ON	OFF	MOM
5232W X404	**5242W X404**	ON	-	MOM
	5244W X404*	ON	ON	ON
	5244W1R X404*	ON	ON	MOM
	5244W2R X404*	MOM	ON	MOM

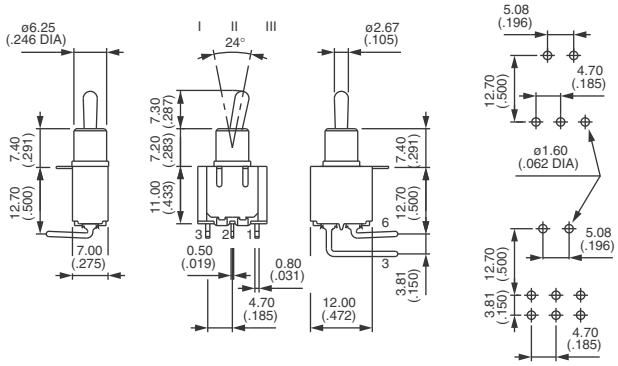

* Function 4 : SP in DP case - specify CT or TH connections, see end of catalogue.

Levers lenghts for WX404 (also available with X445 option)

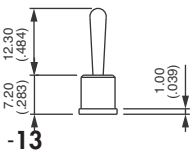

-13

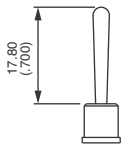

-2

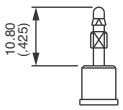

-4N (for paddles)

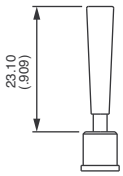

-8

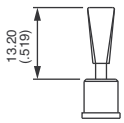

-9

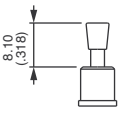

-12

Note : levers -8, -9 and -12 not available with function 2 (ON-MOM)

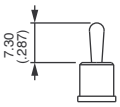

-16

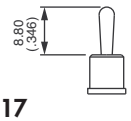

-17

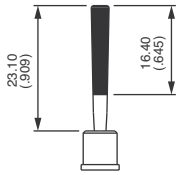

-21 (+U640)*

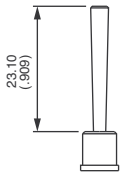

-22

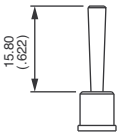

-23

* U640 to be placed in last box of ordering format. Replace 0 by colour code.

Insulating caps and paddles for X404 :

Insulating cap U1710 available with lever style 16.
Paddles U240N, U290N and U390N available with lever style 4N. See details on next pages.

SPECIAL OPTIONS (continued)

With options X372, X386, X442 and X445, the lever lengths indicated on previous pages will be modified.

X371 Plain bushing Ø 6,25 mm (.246) (instead of standard threaded bushing).

X372 Threaded bushing Ø 6,35 (1/4). **Height 7 mm (.274).**

X386 Threaded bushing Ø 6,35 mm (1/4) to replace plain bushing on models W - WW and Y.

X442 Threaded bushing Ø 6,35 mm (1/4) - **Height 9,9 mm (.389)**.

X445 Plain bushing. **Height 7,2 mm (.283)** - for W, WW and Y models. Available with the same levers, insulating cap and paddles as X404.`

X601 **Silver plated brass contacts**.
Current/voltage rating for an electrical life of 20.000 cycles : 0,5A 30VDC.
Minimum quantity : 5.000 pieces per model and shipment.

X681 **Satin chrome** actuator

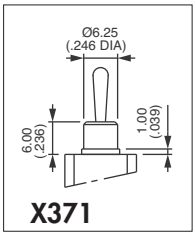

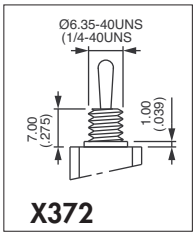

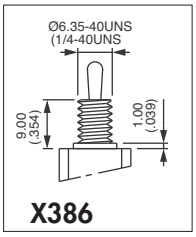

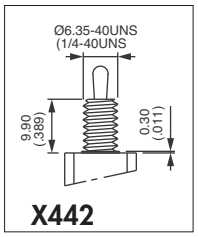

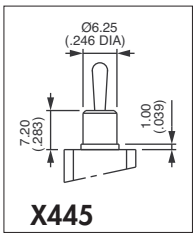

X814 **Switches for peak currents**

Peak current up to 120A (1 ms) 60VDC - single/double pole

Single pole **5636A X814**	ON	-	ON
Double pole **5646A X814**	ON	-	ON

- Contacts : silver/nickel alloy (AgNi)
- Max. current/voltage rating : 2/120A (1 ms) 60VDC - 10.000 cycles
- Further specifications and dimensions : see 5600 series.
- General information on peak currents : see end of catalogue.

X902 Plain bushing Ø 6,25 mm (.246) - **Height 9 mm (.354)** (not available with K sealing option).

X916 Locking lever on model with plain bushing.

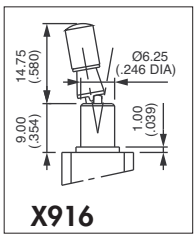

AGENCY APPROVALS

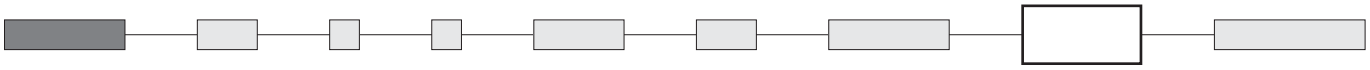

UL	All standard models, except 5200MIWR
CSA	
CECC	Standard models 5600 - 5200

Availability : consult factory for details of approved combinations or options.

Marking : to order switches marked UL, CSA or CECC, complete above box with desired approvals, in this order & without space (ex. : ULCSACECC). Blank : no agency approval required.

VDE (with UL & CSA) Refer to 55000 series on the following pages.

Preferential lists : see specifications.

INSULATING CAPS AND PADDLES

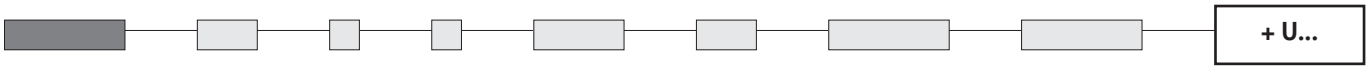

Insulating caps

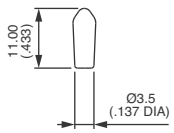

U270
For standard lever & threaded bushing only

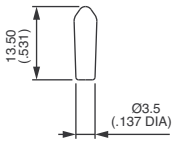

U1040
For standard lever & plain bushing only

Cap colours	
Replace last "0" by number	
1	blue
1/4	dark blue
2	black
3	green
4	grey
5	yellow
6	red
7/1	white
9	orange

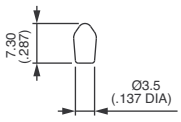

U1710
For lever 17 and threaded bushing
For lever 7 and plain bushing

Insulating caps are not available in ivory colour.

INSULATED CAPS AND PADDLES (continued)

Paddles
For use with lever 4N only. Shown with standard threaded bushing. Order separately.

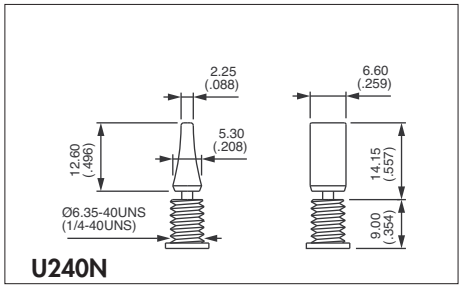

U240N

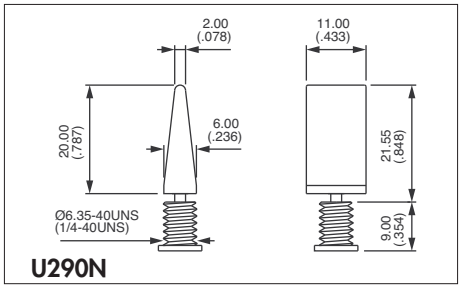

U290N

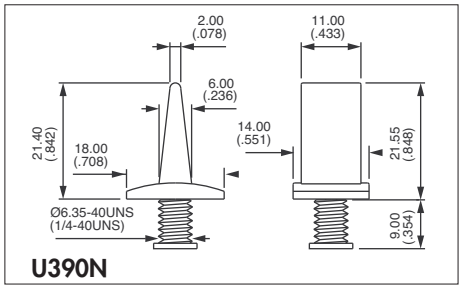

U390N

Paddle colours	
Replace last "0" by number	
1	blue
1/4	dark blue
2	black
3	green
4	grey
5	yellow
6	red
7	ivory
7/1	white
9	orange

MODEL STRUCTURE

55000 series

VDE approved toggle switches

EN 61058-1

- The switches described below are marked VDE as standard.
- UL and CSA agency approvals are also available. To order a switch marked UL or CSA, please complete "Agency approvals" box.

A

ELECTRICAL SPECIFICATIONS

- Class I (normal insulation)
- Small contact opening : μ (< 3 mm (.118))
- Current/voltage rating with resistive load : 3A 250VAC - 6A 125VAC
- Dielectric strength :
  2.000 Vrms 50 Hz min. between poles and between terminals and frame
  1.000 Vrms 50 Hz min. between terminals
- Special body for increased creepage distance and air gap : 3 mm (.118)

MATERIALS

- Contacts : silver
- Case : diallylphthalate (DAP)
- Actuator : brass, chrome plated with insulating vinyl cap
- Bushing : brass, nickel plated
- Housing : stainless steel
- Terminal seal : epoxy

GENERAL SPECIFICATIONS

- Insulating cap, compulsory, supplied glued on the lever :
  U270 for models 55600A, 55200A and 55200ZA
  U1040 for models 55200WA and 55200WA X433
- Ground connector :
  U721 compulsory if the panel is not metallic or not connected to ground
- Epoxy sealed terminals standard

Further specifications, see 5000 series.

MODEL STRUCTURE

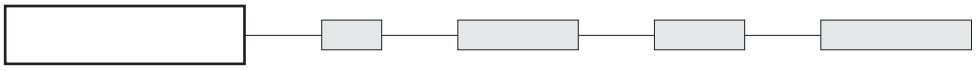

Solder lugs

		III	II	I
		2-3		1-2
		5-6		4-5
Single pole	Double pole			
55636A	**55646A**	ON	-	ON
55639A	**55649A**	ON	OFF	ON

Also available with Ø 6 mm (.236) bushing : **55500**.

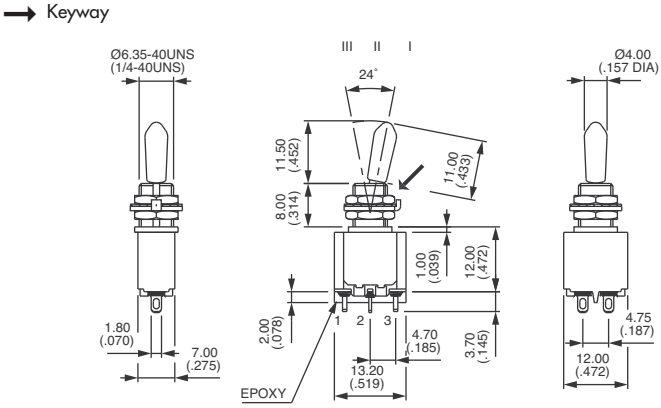

Straight PC terminals

		III	II	I
		2-3		1-2
		5-6		4-5
Single pole	Double pole			
55236A	**55246A**	ON	-	ON
55239A	**55249A**	ON	OFF	ON

Also available with Ø 6 mm (.236") bushing : **55100**.

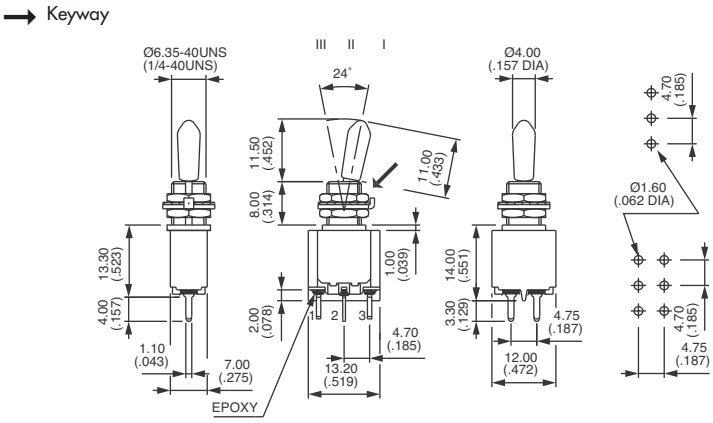

The company reserves the right to change specifications without notice.

55000 series

VDE approved toggle switches

OPTIONS

A

Right angle terminals - horizontal

		III	II	I
		2-3		1-2
		5-6		4-5
Single pole	Double pole*			
55236WA	**55246WA X433**	ON	-	ON
55239WA	**55249WA X433**	ON	OFF	ON

"X433" to be placed in the third box of ordering format.

Also available for VERTICAL mounting (on request).

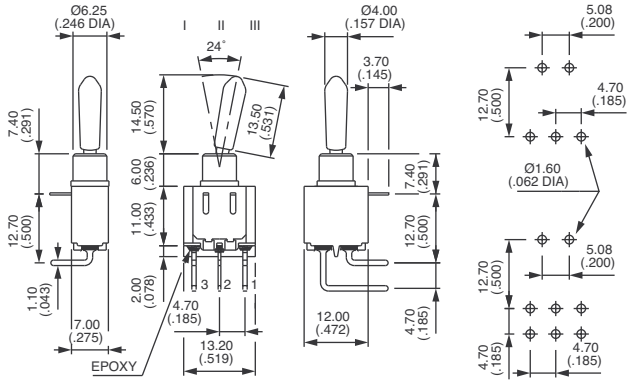

Quick-connect terminals

	III	II	I
	2-3		1-2
Single pole			
55236Z	ON	-	ON
55239ZA	ON	OFF	ON

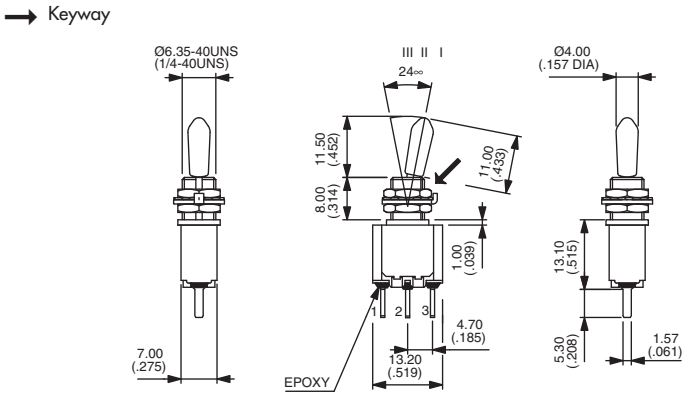

PANEL CUT-OUT

Bushing Ø 6,35 (1/4)

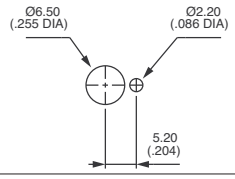

Bushing Ø 6 (.236)

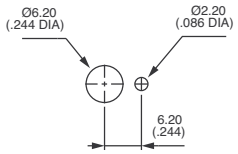

* In double pole W models, spacing between poles on PCB is different from standard : 4,7 mm (.185) instead of 3,81 mm (.150)

LEVERS

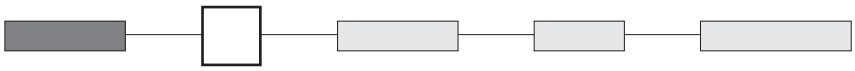

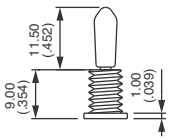

Blank

For threaded bushing models
Cap U270 compulsory

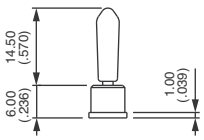

Blank

For plain bushing models
Cap U1040 compulsory

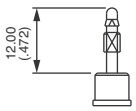

-4N

For use with paddles only

LEVERS (continued)

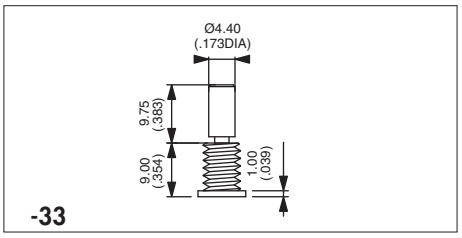

For threaded bushing models

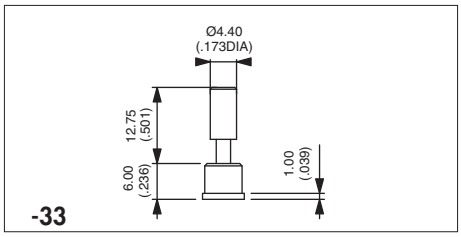

For plain bushing models

AGENCY APPROVALS

VDE
VDEUL
VDEULCSA

Complete above box with desired approvals.

INSULATING CAPS AND PADDLES

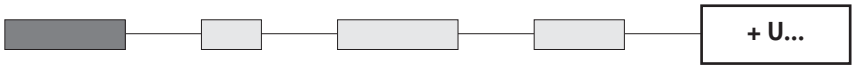

Insulating caps

Compulsory - delivered assembled on the lever - not available in ivory colour

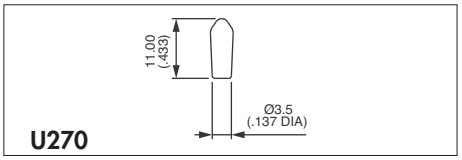

For threaded bushing models

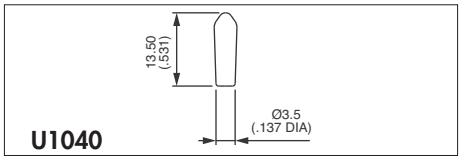

For plain bushing models

Cap/paddle colours	
Replace last "0" by number	
1	blue
1/4	dark blue
2	black
3	green
4	grey
5	yellow
7	ivory
7/1	white
9	orange

Paddles

For use with lever 4N only. Shown with threaded bushing. Order separately.

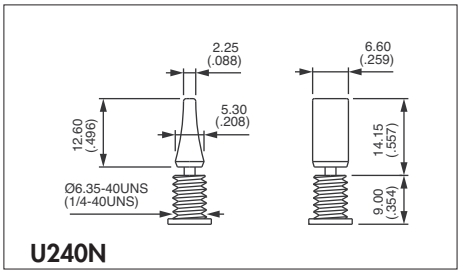

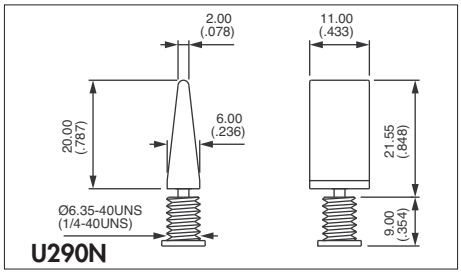

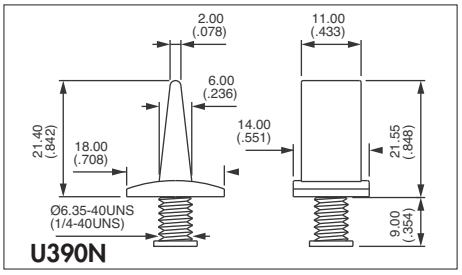

GROUND CONNECTOR

IMPORTANT : compulsory on models with threaded bushing if the panel is not metallic or not connected to ground. Order separately.

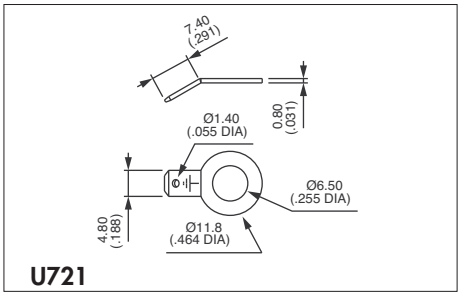

10600 series

Professional toggle switches - threaded bushing Ø 10 (.393)

Distinctive features and pecifications

❑ **CECC approved**

A

ELECTRICAL SPECIFICATIONS

- Max. current/voltage rating with resistive load :
  2A 220VAC - 3A 110VAC - 3A 24VDC
- Minimum load : 100µA 10mV
- Initial contact resistance : 10 mΩ max.
- Insulation resistance : 1.000 MΩ min. at 500VDC
- Dielectric strength :
  1.000 Vrms 50 Hz min. between terminals of the same pole
  2.000 Vrms 50 Hz min. between terminals and frame
  2.000 Vrms 50 Hz min. between terminals of adjacent poles
- Electrical life : 50.000 cycles

MATERIALS

- Case : diallylphthalate (DAP) or high temperature plastic material (UL94-V0)
- Actuator : brass, nickel plated
- Bushing : brass, nickel plated
- Housing : stainless steel
- Contacts :
  - silver
  - silver, gold plated
- Terminal seal : epoxy

HOMOLOGATION

CECC 96201-007

Availability : consult factory for details of approved models.

Marking : to order switches marked CECC, add "CECC" to model number.

GENERAL SPECIFICATIONS

- Torque : 1,50 Nm (1.106 Ft.lb) max. applied to nut
- Max. panel thickness : 4 mm (.157)
- Operating temperature : -40°C to +85°C

ABOUT THIS SERIES
Complete part numbers are shown on the following pages.

Dimensions : first dimensions are in mm while inches are shown as bracketed numbers.

Sealing boots are available to protect the switches against dust and water. They are presented in section H.

Mounting accessories : standard hardware supplied with all models : 1 knurled cap nut, 1 hex nut, 1 locking ring and 1 lockwasher. They are presented in section I.

Packaging unit : 25 pieces.

The company reserves the right to change specifications without notice.

10600 series

Professional toggle switches - threaded bushing Ø 10 (.393)

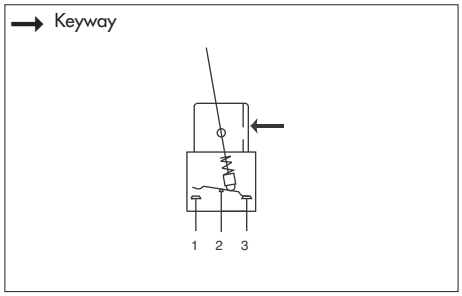

- Solder lug terminals
- 2 and 3 positions
- 1 and 2 pole configurations
- Available with matt black finish : consult factory for model number

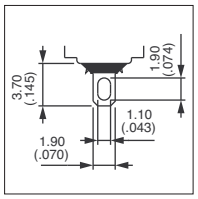

A

2 positions - single pole

	II 1-3		I 1-2
Silver contacts			
106362103	ON	-	ON
106322103	ON	-	MOM
Gold plated silver contacts			
106361175	ON	-	ON
106321175	ON	-	MOM

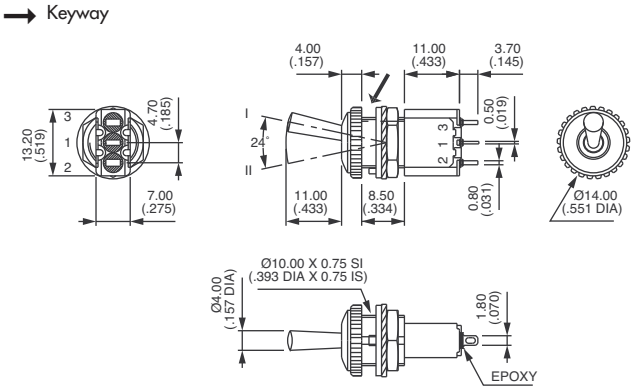

2 positions - double pole

	II 2-3 5-6		I 2-1 5-4
Silver contacts			
106462103	ON	-	ON
106422103	ON	-	MOM
Gold plated silver contacts			
106461175	ON	-	ON
106421175	ON	-	MOM

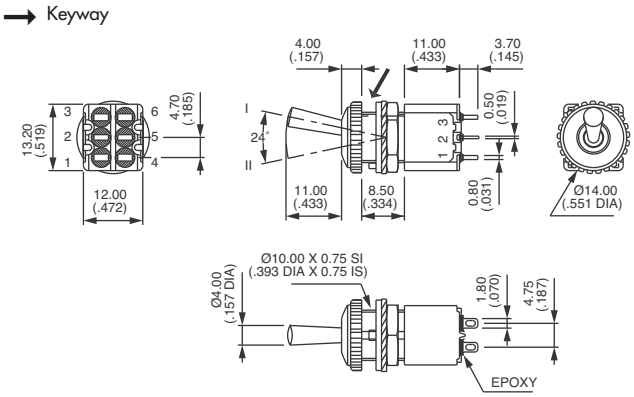

3 positions - single pole

	III 2-3	II	I 2-1
Silver contacts			
106392103	ON	OFF	ON
106372103	MOM	OFF	MOM
106382103	ON	OFF	MOM
Gold plated silver contacts			
106391175	ON	OFF	ON
106371175	MOM	OFF	MOM
106381175	ON	OFF	MOM

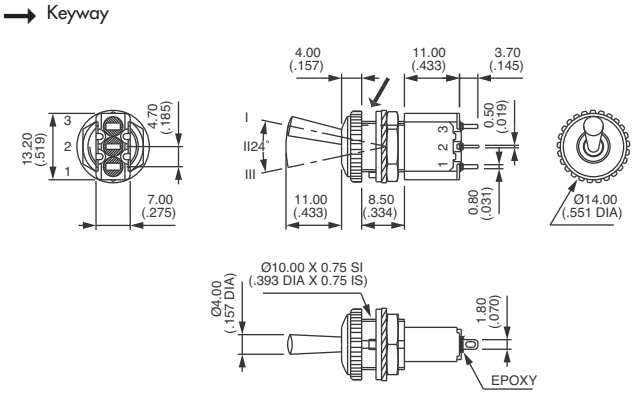

10600 series

Professional toggle switches - threaded bushing Ø 10 (.393)

A

3 positions - double pole

	III	II	I
	2-3		2-1
	5-6		5-4

→ Keyway

Silver contacts

106492103	ON	OFF	ON
106472103	MOM	OFF	MOM
106482103	ON	OFF	MOM
106440886*	ON	ON (2-3) (5-4)	ON

Gold plated silver contacts

106491175	ON	OFF	ON
106471175	MOM	OFF	MOM
106481175	ON	OFF	MOM
106440944*	ON	ON (2-3) (5-4)	ON

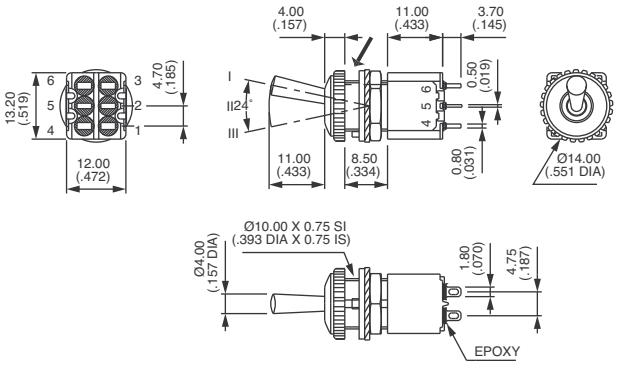

* Function 4 : SP in DP case. Jumper between terminals 2 and 4 to be wired by the user.

PANEL CUT-OUT

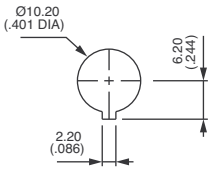

11000 and 12000 series

Professional toggle switches

Distinctive features

- **Applications**
  These switches are specially manufactured for defence, telecommunications and other professional applications.

- **Approvals**

  CECC 96201-005
  CECC 96201-008

  • Meeting the requirements of **MIL** standard (MIL 3950)

- **Robust switches for high specification environments**

- **Toggle action on 2-position models giving smooth mechanical operation**

- **Plastic material with high insulation resistance**

- **Several front panel sealing options**

- **Several locking lever options (12000 series)**

- **Bright chrome, satin chrome or black finish**

The company reserves the right to change specifications without notice.

11000 series

Professional toggle switches - threaded bushing Ø 6,35 (1/4)

Specifications

A

ELECTRICAL SPECIFICATIONS

- Max. current/voltage rating with resistive load : Peak currents, refer to "Special options".
  - silver contacts (A-AD2-X780) : 4A 30VDC
  - gold contacts (D) : 100mA 30VDC
- Minimum load : AD2-X780-D contacts : 10mA 50mV, 10µA 5V min.
- Initial contact resistance : 10 mΩ max.
- Insulation resistance : 1.000 MΩ min. at 500VDC
- Dielectric strength :
  1.000 Vrms 50 Hz min. between terminals
  2.000 Vrms 50 Hz min. between poles and between terminals and frame
- Contact bounce : 2 ms max.
- Electrical life at full load :

		Number of cycles	
Contacts	Max. current/voltage rating	2 positions	3 positions
A	4A 30VDC	50.000	50.000
AD2 X780	4A 30VDC (Gold plating : 100mA 30VDC max.)	20.000	20.000
D	100mA 30VDC	80.000	50.000
	Low level or mechanical life	150.000	100.000

MATERIALS

- Case : diallylphthalate (DAP)
- Actuator : brass, nickel plated
- Bushing : brass, nickel plated
- Housing : brass, nickel plated
- Contacts
  A : silver
  AD2 : gold plated silver (2 microns gold)
  X780 : solid rivet - gold plated silver/nickel alloy
  D : solid gold rivet
  X910 : silver/nickel alloy (for peak currents, see "Special options")
- Terminal seal : epoxy

Note : AD2 and X780 contacts can be used for high level applications. In this case, the gold layer is considered only as a protection against oxidation during storage.

GENERAL SPECIFICATIONS

- Torque :1,25 Nm (.92 Ft.lb) max. applied between the 2 nuts
- Standard panel thickness : 2,5 mm (.098) max.
- Operating temperature : -40°C to +85°C

RELIABILITY - RUN-IN TEST

Upon request, each individual switch can be submitted to a low level run-in test of 50 or 250 cycles to ensure suitability for special applications requiring a very high level of reliability (military, etc.).

AGENCY APPROVALS

CECC 96201-005
CECC 96201-008

Availability : consult factory for details of approved models.
Marking : to order switches marked CECC, complete appropriate box of ordering format.

Dimensions : first dimensions are in mm while inches are shown as bracketed numbers.

Packaging unit : 25 pieces or 50 pieces depending on models.

11000 series

Professional toggle switches - threaded bushing Ø 6,35 (1/4)

Overview

MODEL STRUCTURE

11				
SERIES	Terminals and bushings	Number of poles	Electrical functions	Terminals

Terminals and bushings

1	Solder lug or right angle
2	Straight PC terminals

All models with Ø 6,35 (1/4) threaded bushing.

Number of poles

3	Single pole
4	Double pole
5	Three pole
6	Four pole

Electrical functions

6	ON	-	ON
9	ON	OFF	ON
7	MOM	OFF	MOM
8	ON	OFF	MOM

Terminals

Blank	Solder lug or straight PC
W	Right angle, horizontal mounting (function 6, SP only)

A

OPTIONS

Finish

Blank	Nickel plated
G	Black finish on bushing, actuator and hardware.

Levers

Blank	Standard
-26	Cylindrical

Approval

CECC

Availability : Consult factory for details of approved models.

Contact materials

A	Silver
AD2	Gold plated silver (2 microns)
D	Solid gold rivet

See "Special options" for X780 (solid silver/nickel rivet) and X910 (for peak currents).

Sealing

Blank	Epoxy sealed terminals standard
K	Front panel sealing by one O-ring and sealing washer

Sealing by two O-rings, see X408, "Special options" box.

Special options

Blank	No special requirement
X408	Front panel sealing by two O-rings

Other : see following pages.

NOTICE : please note that not all combinations of above numbers are available.
Refer to the following pages for further information.

ABOUT THIS SERIES

On the following pages, you will find successively :
- model structure of switches
- options in the same order as in above chart

Sealing boots are available to protect the switches against dust and water. They are presented in section H.

Mounting accessories : standard hardware supplied with all models : 2 hex nuts 8 (.314) across flats, 1 locking ring and 1 lockwasher. Standard and special hardware available are presented in section I.

11000 series

Professional toggle switches - threaded bushing Ø 6,35 (1/4)

MODEL STRUCTURE

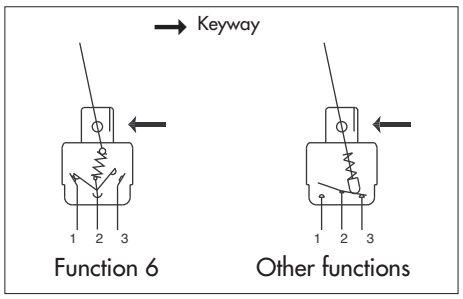

- Solder lug, straight PC or right angle terminals
- Epoxy sealed terminals standard

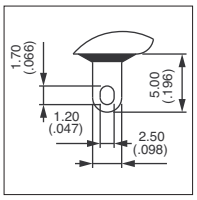

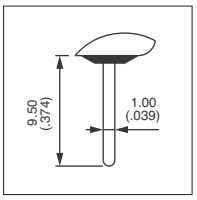

A

MODEL STRUCTURE

Shown with standard lever

Solder lug terminals - single pole

	I	II	III
11136	ON	-	ON
11139	ON	OFF	ON
11137	MOM	OFF	MOM
11138	ON	OFF	MOM

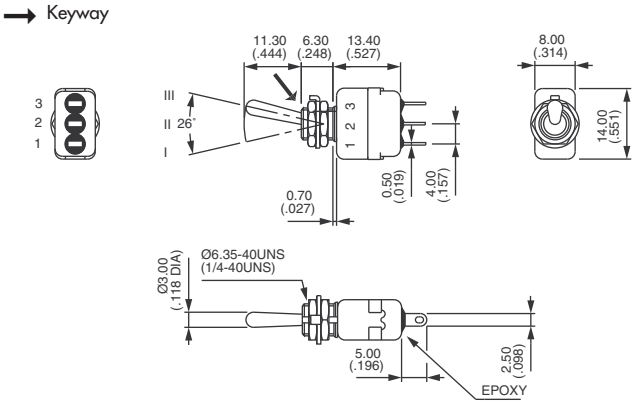

Solder lug terminals - double pole

	I	II	III
11146	ON	-	ON
11149	ON	OFF	ON
11147	MOM	OFF	MOM
11148	ON	OFF	MOM

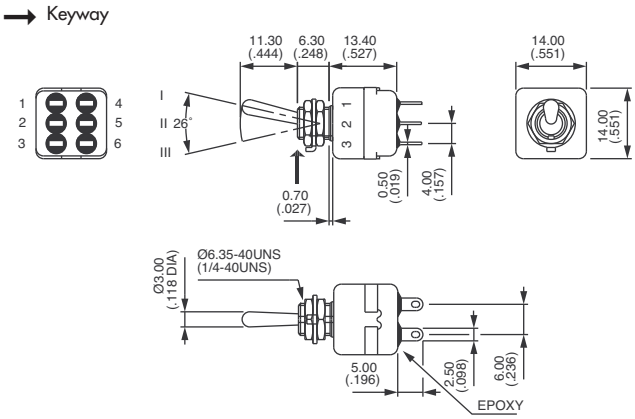

Solder lug terminals - three pole

	I	II	III
11156	ON	-	ON
11159	ON	OFF	ON
11157	MOM	OFF	MOM
11158	ON	OFF	MOM

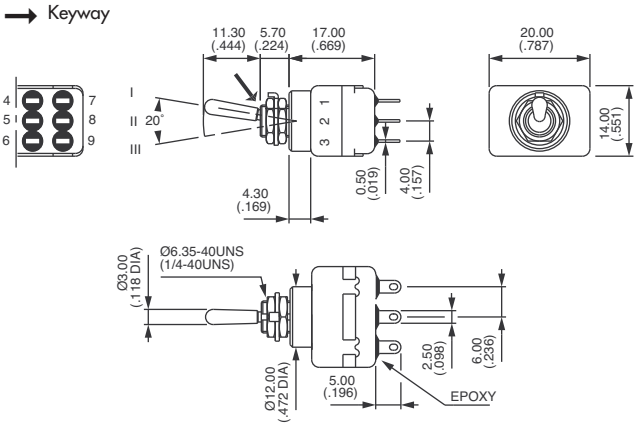

11000 series

Professional toggle switches - threaded bushing Ø 6,35 (1/4)

Solder lug terminals - four pole

	II	II	III
11166	ON	-	ON
11169	ON	OFF	ON
11167	MOM	OFF	MOM
11168	ON	OFF	MOM

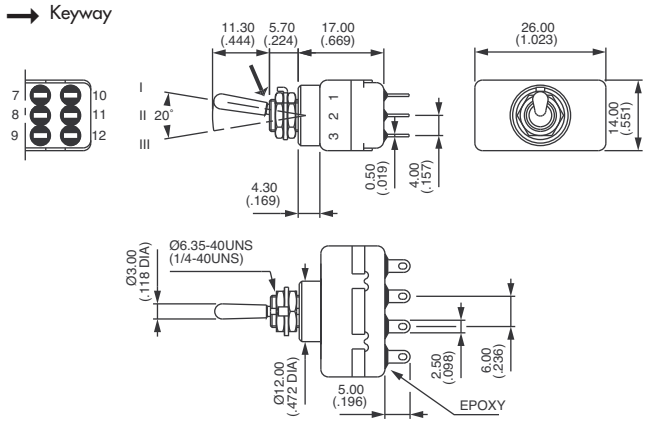

Straight PC terminals - single pole ▲

	II	II	III
11236	ON	-	ON

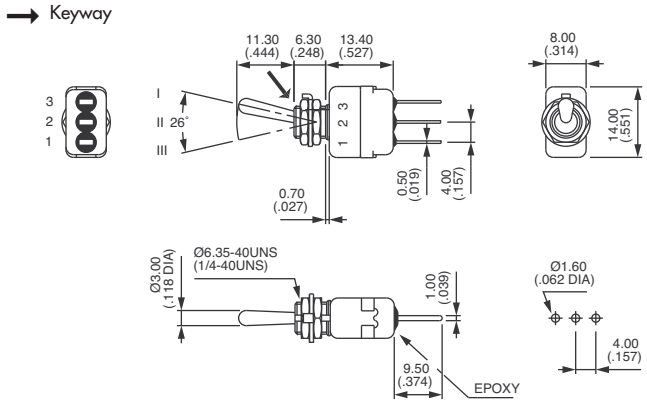

Straight PC terminals - double pole ▲

	II	II	III
11246	ON	-	ON

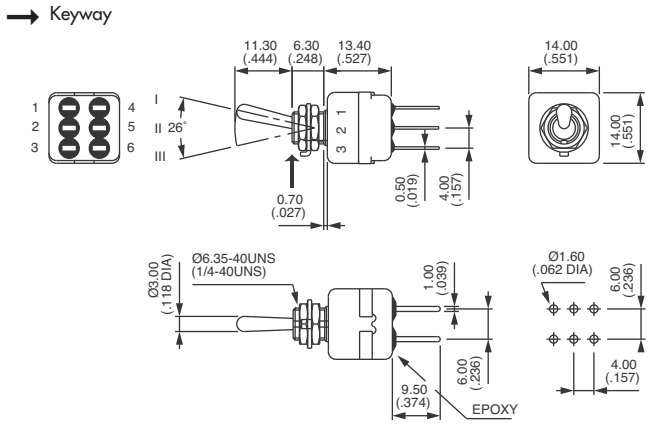

Straight PC terminals - three pole ▲

	II	II	III
11256	ON	-	ON

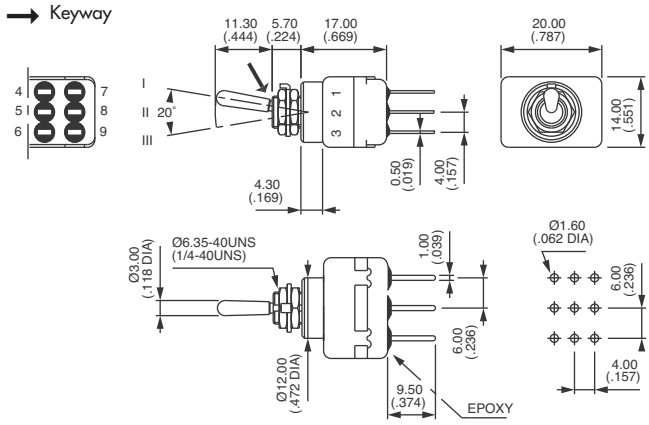

11000 series

Professional toggle switches - threaded bushing Ø 6,35 (1/4)

MODEL STRUCTURE

A

Straight PC terminals - four pole ▲

	I	II	III
11266	ON	-	ON

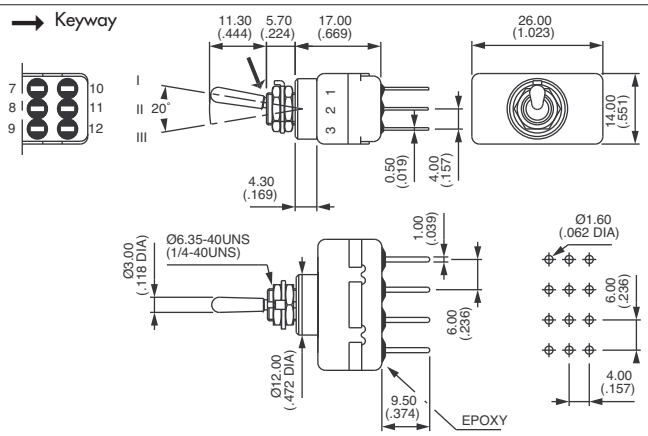

Right angle terminals - horizontal - single pole

	I	II	III
11136W	ON	-	ON

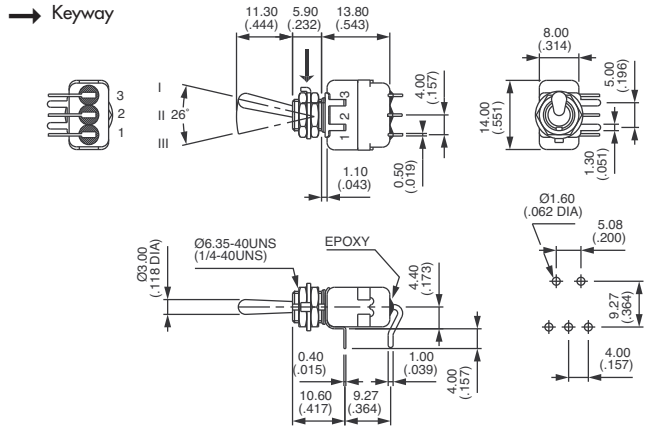

PANEL CUT-OUT

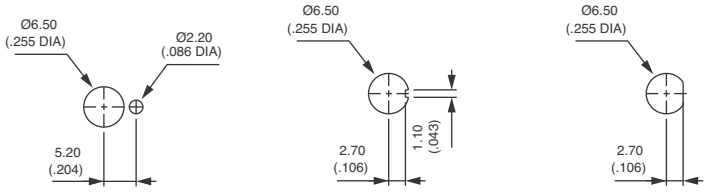

Standard | With **K** sealing option | With **X408** sealing option

▲ **3,5 mm (.138) short terminals** available for function 6, as well as for functions 9, 7 and 8. On request.

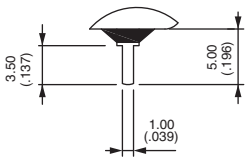

CONTACT MATERIALS

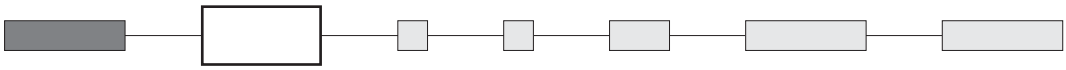

A Silver
AD2 Gold plated silver (2 micron gold)
D Solid gold rivet

See "Special options" for contacts X780 (solid silver/nickel rivet) and contacts X910 (for peak currents).

FINISH

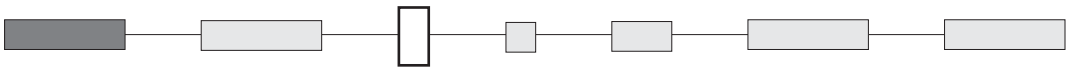

Blank Nickel plated
G Black finish on bushing, lever and hardware.

Other finish, consult factory.

SEALING

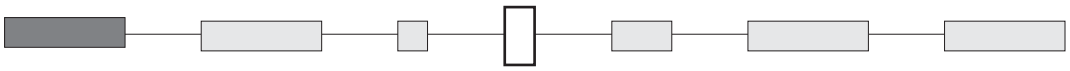

Epoxy sealed terminals are standard.

Blank No sealing except standard

K Front panel sealing by O-ring and sealing washer. Protects the switch against water and dust.
Panel seal withstands 1 bar pressure and remains sealed even when switch is operated.

Not available on 11000W model.

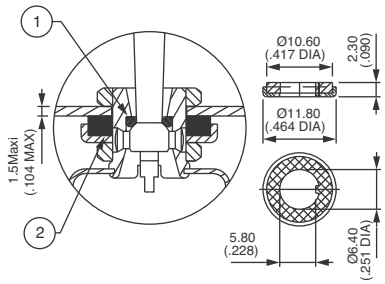

① O-ring ② Sealing washer

Sealing by two O-rings, see X408 under "Special options".
Sealing boots : see section H.

LEVERS

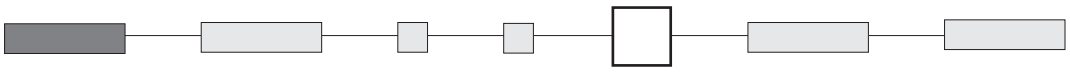

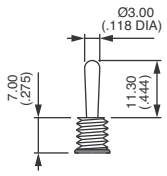

Blank
Standard

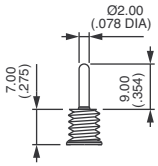

-26
Cylindrical

11000 series

Professional toggle switches - threaded bushing Ø 6,35 (1/4)

OPTIONS

A

SPECIAL OPTIONS

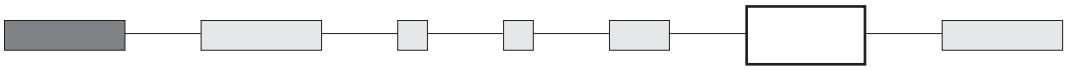

X408 Front panel sealing by two O-rings. Flatted bushing for precise orientation.
Protects the switch against water and dust.
Panel seal withstands 1 bar pressure and remains sealed even when switch is operated.

Not available on 11000W model.

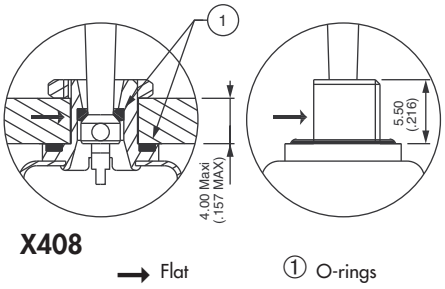

X780 Solid rivet, gold plated silver/nickel alloy

X910 **Switches for peak currents**

Peak current up to 80A (1 ms) 60VDC - single/double pole

Single pole **11136 X910**	ON	-	ON
Double pole **11146 X910**	ON	-	ON

- Contacts : solid rivet - silver/nickel alloy (AgNi)
- Max. current/voltage rating :
  3/80A (1 ms) 60VDC - 10.000 cycles
- Further specifications and dimensions : see previous pages
- General information on peak currents : see end of catalogue.

AGENCY APPROVALS

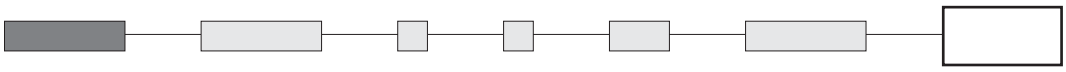

CECC CECC 96201-005 (high level - contacts X780)
CECC 96201-008 (low level - contacts AD2 or D)

Availability : consult factory for details of approved models.

Marking : to order switches marked CECC , complete above box with "CECC".
Blank : no agency approval required.

ELECTRICAL SPECIFICATIONS

- Max. current/voltage rating with resistive load : Peak currents, refer to "Special options".
  - silver contacts (A-AD2-X780) : 4A 30VDC
  - gold contacts (D) : 100mA 30VDC
- Minimum load : AD2-X780-D contacts : 10mA 50mV, 10µA 5V min.
- Initial contact resistance : 10 mΩ max.
- Insulation resistance : 1.000 MΩ min. at 500VDC
- Dielectric strength :
  1.000 Vrms 50 Hz min. between terminals
  2.000 Vrms 50 Hz min. between poles and between terminals and frame
- Contact bounce : 2 ms max.
- Electrical life at full load :

		Number of cycles	
Contacts	Max. current/voltage rating	2 positions	3 positions
A	4A 30VDC	50.000	50.000
AD2 X780	4A 30VDC (Gold plating : 100mA 30VDC max.)	20.000	20.000
D	100mA 30VDC	80.000	50.000
	Low level or mechanical life	150.000	100.000

MATERIALS

- Case : diallylphthalate (DAP)
- Actuator : brass, chrome plated
- Bushing : brass, nickel plated
- Housing : brass, nickel plated
- Contacts
  A : silver
  AD2 : gold plated silver (2 microns gold)
  X780 : solid rivet - gold plated silver/nickel alloy
  D : solid gold rivet
  X910 : silver/nickel alloy (for peak currents, see "Special options")
- Terminal seal : epoxy

Note : AD2 and X780 contacts can be used for high level applications. In this case, the gold layer is considered only as a protection against oxidation during storage.
Tin dipped terminals available, see "Special options".

GENERAL SPECIFICATIONS

- Torque :1,50 Nm (1.10 Ft.lb) max. applied between the 2 nuts
- Standard panel thickness : 4,5 mm (.177) max.
- Operating temperature : -40°C to +85°C

RELIABILITY - RUN-IN TEST

Upon request, each individual switch can be submitted to a low level run-in test of 50 or 250 cycles to ensure suitability for special applications requiring a very high level of reliability (military, space, etc.).

AGENCY APPROVALS

CECC 96201-005
CECC 96201-008

Designed to **MIL** specifications

Availability : consult factory for details of approved models.
Marking : to order switches marked CECC, complete appropriate box of ordering format.

Dimensions : first dimensions are in mm while inches are shown as bracketed numbers.

Packaging unit : 2 pole models : 25 pieces - 3 & 4 pole models : 20 pieces.

12000 series

Professional toggle switches - threaded bushing Ø 11,9 (15/32)

Overview

A

MODEL STRUCTURE

12				
SERIES	Terminals and bushings	Number of poles	Electrical functions	Momentary for function 4

Terminals and bushings

1 Solder lug terminals
2 Straight PC terminals

All models with threaded bushing Ø 11,9 (15/32). Bushing Ø 15 (.590), see X822 under "Special options".

Number of poles

4 Double pole
5 Three pole
6 Four pole

Electrical functions

6	ON	-	ON
9	ON	OFF	ON
7	MOM	OFF	MOM
8	ON	OFF	MOM
5	-	ON	MOM
4	ON	ON	ON
	ON	ON	MOM ▲
	MOM	ON	MOM ▲

Function 4
. ▲ Must not have blank in "momentary" box.

Momentary for function 4

1R	ON	ON	MOM
2R	MOM	ON	MOM

Leave blank for other functions.

OPTIONS

Finish

Blank Bright chrome finish on actuator
G Black finish on bushing, actuator and hardware.

Satin chrome finish, see "Special options".

Fluorescent tip

Blank None
-038 White fluorescent tip to lever

Available with matt black finish (G) only.

Special options

Blank No special requirement
X408 Front panel sealing by two O-rings
X822 Bushing Ø 15 (.590)

Other : see foll. pages.

Contact materials

A Silver
AD2 Silver, gold plated (2 micron gold))
D Solid gold rivet

See "Special options" for X780 (solid silver/nickel rivet) and X910 (for peak currents).

Sealing

Blank Epoxy sealed terminals standard
K Front panel sealing by one O-ring and sealing washer

Sealing by two O-rings, see X408, "Special options" box.

Levers

Blank Standard lever
-12 Short lever

Locking levers

-1V 1 locked position
-2V 2 locked positions
-3V 3 locked positions

Other : see foll. pages.

Approvals

CECC

Availability :
Consult factory for details of approved models.

NOTICE : please note that not all combinations of above numbers are available.
Refer to the following pages for further information.

ABOUT THIS SERIES
On the following pages, you will find successively :
- model structure of switches
- options in the same order as in above chart

Sealing boots are available to protect the switches against dust and water. They are presented in section H.

Mounting accessories : standard hardware supplied with all models : 2 hex nuts 14 (.551) across flats and 1 locking ring.
Standard and special hardware available are presented in section I.
Security caps are available to prevent inadvertent lever operation. They are presented in section I.

MODEL STRUCTURE

12000 series

Professional toggle switches - threaded bushing Ø 11,9 (15/32)

Solder lug terminals : 12100

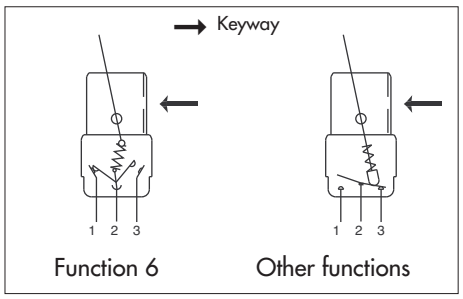

- Epoxy sealed terminals standard

Typical angle of throw (A)	
Function 6	26°
Functions 9, 7, 8, 4	20°
Function 5	12°

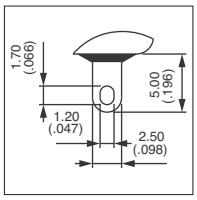

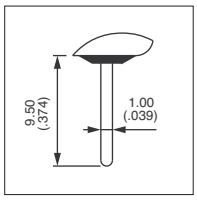

A

MODEL STRUCTURE

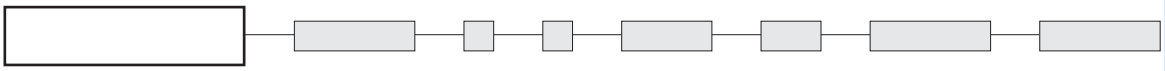

Shown with standard lever

Solder lug terminals - double pole

	I	II	III
12146	ON	-	ON
12149	ON	OFF	ON
12147	MOM	OFF	MOM
12148	ON	OFF	MOM
12144*	ON	ON	ON
12144 1R*	ON	ON	MOM
12144 2R*	MOM	ON	MOM
12145	-	ON	MOM

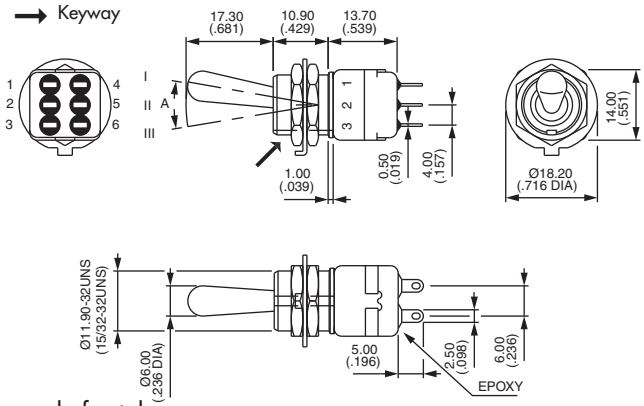

* Function 4 : SP in DP case - connections, see end of catalogue.

Solder lug terminals - three pole

	I	II	III
12156	ON	-	ON
12159	ON	OFF	ON
12157	MOM	OFF	MOM
12158	ON	OFF	MOM

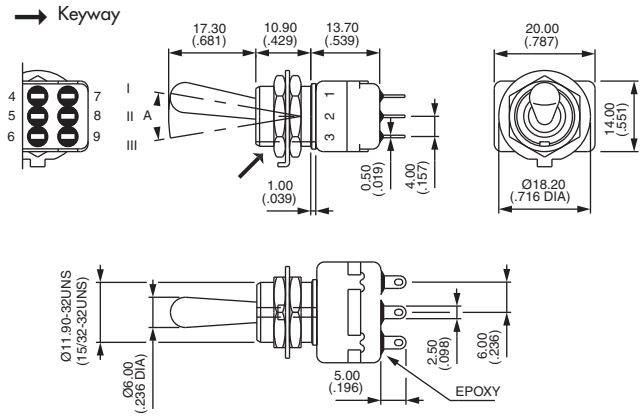

Solder lug terminals - four pole

	I	II	III
12166	ON	-	ON
12169	ON	OFF	ON
12167	MOM	OFF	MOM
12168	ON	OFF	MOM
12164*	ON	ON	ON
12164 1R*	ON	ON	MOM
12164 2R*	MOM	ON	MOM

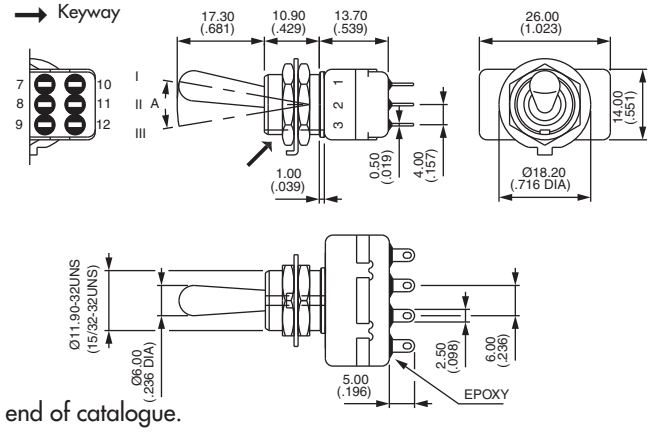

* Function 4 : DP in 4P case - connections, see end of catalogue.

12000 series

Professional toggle switches - threaded bushing Ø 11,9 (15/32)

Straight PC terminals : 12200

MODEL STRUCTURE

A

Straight PC terminals - double pole ▲

	I	II	III
12246	ON	-	ON

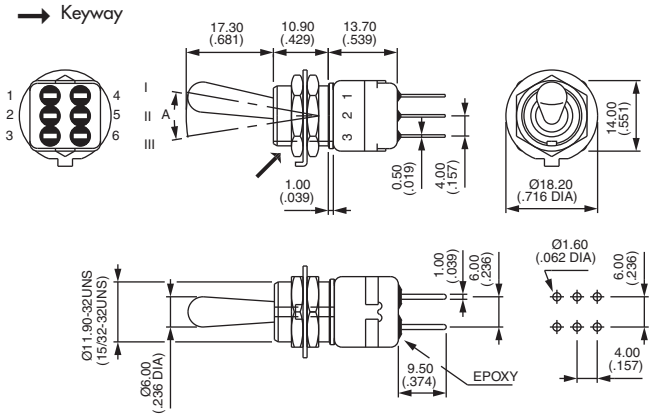

Straight PC terminals - three pole ▲

	I	II	III
12256	ON	-	ON

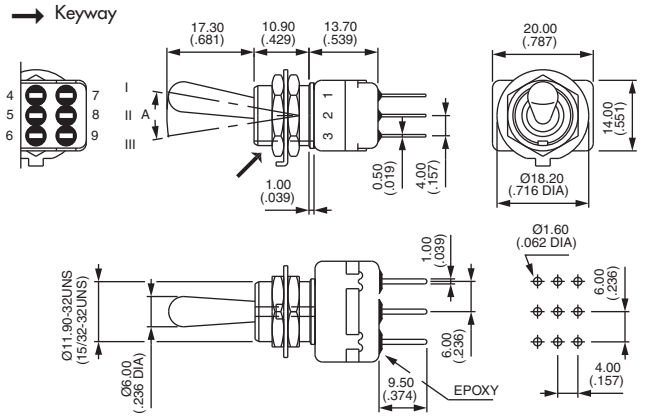

Straight PC terminals - four pole ▲

	I	II	III
12266	ON	-	ON

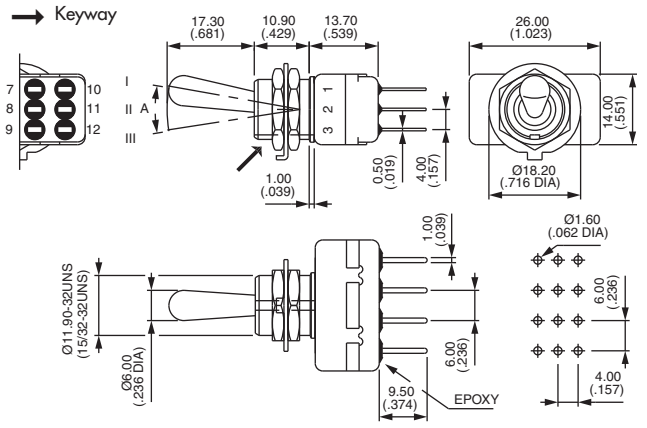

PANEL CUT-OUT

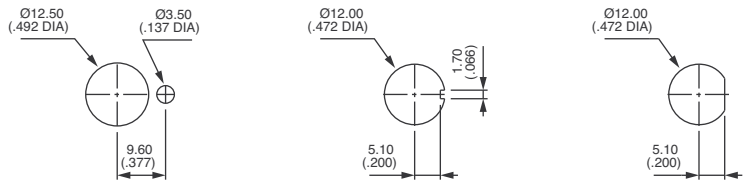

Standard | With **K** sealing option | With **X408** sealing option

▲ **3,5 mm (.138) short terminals** available on request for function 6. Standard for functions 9, 7, 8, 4 and 5.

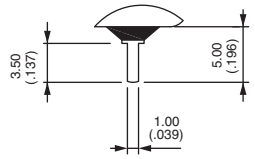

CONTACT MATERIALS

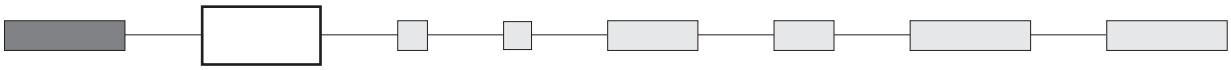

A Silver
AD2 Silver, gold plated (2 micron gold)
D Solid gold rivet (except functions 4 and 5)

See "Special options" for contacts X780 (solid silver/nickel rivet) and contacts X910 (for peak currents).

FINISH

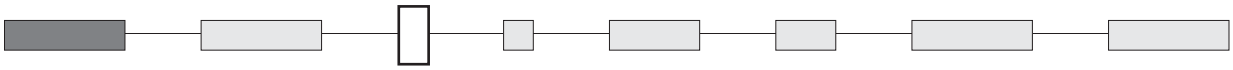

Blank Bright chrome finish on actuator
G Black finish on bushing, lever and hardware.

For satin chrome finish, see "Special options".

SEALING

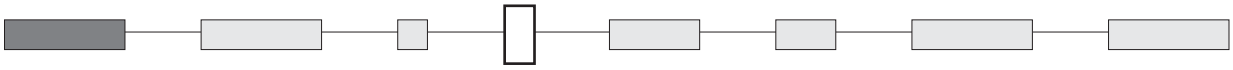

Epoxy sealed terminals are standard.

Blank No sealing except standard.

K Front panel sealing by one O-ring and sealing washer.
Protects the switch against water and dust.
Panel seal withstands 1 bar pressure and remains sealed even when switch is operated.

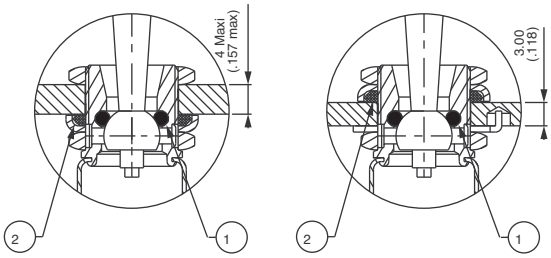

① O-ring ② Sealing washer

Sealing by two O-rings, see X408 under "Special options".
Sealing boots : see section H.

FLUORESCENT TIP

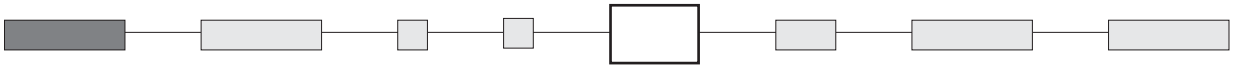

Blank None

-038 White fluorescent tip.
Becomes luminous when submitted to ultra-violet rays.

Available with matt black finish (option G) only.

Standard lever

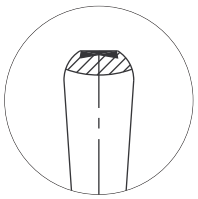

Locking lever

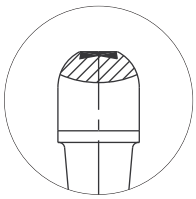

12000 series

Professional toggle switches - threaded bushing Ø 11,9 (15/32)

OPTIONS

A

ACTUATORS

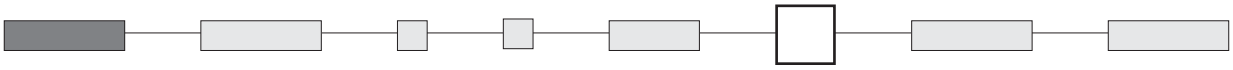

Levers

Dash compulsory before lever code.

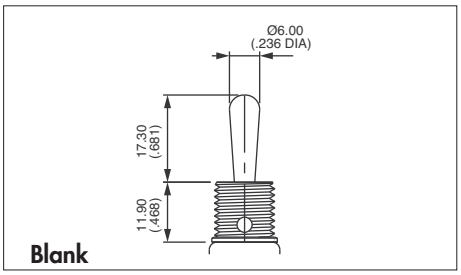

Standard

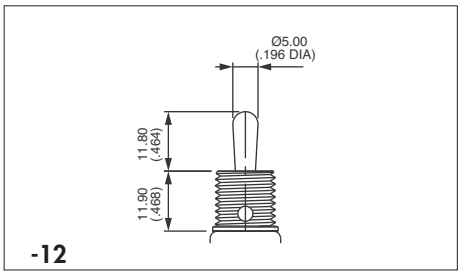

Short lever

Security caps : see section I.

Locking levers

→ Keyway

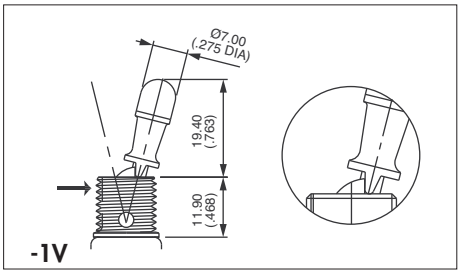

1 locked position (function 6)
Typical angle of throw : 26°

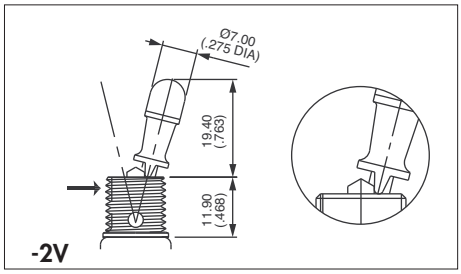

2 locked positions (function 6)
Typical angle of throw : 26°

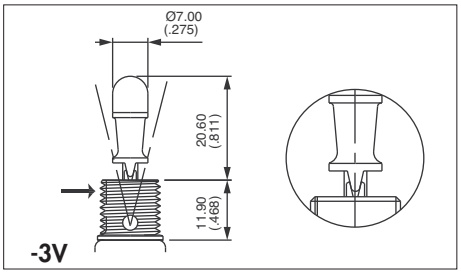

3 locked positions (functions 9 and 4)
Typical angle of throw : 20°

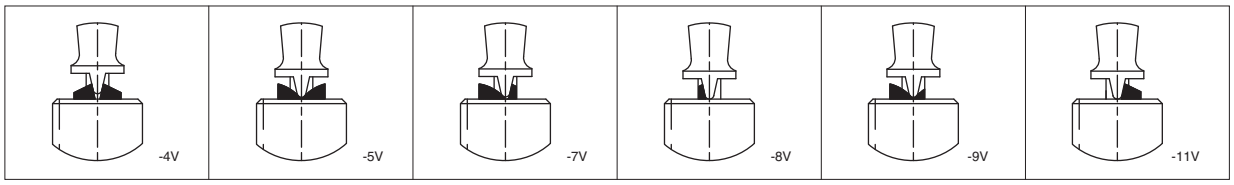

Functions 9 & 4	Functions 7 & 442R	Functions 8 & 441R	Functions 8, 9, 44 & 441R	Functions 8 & 441R	Functons 8, 9, 44 & 441R

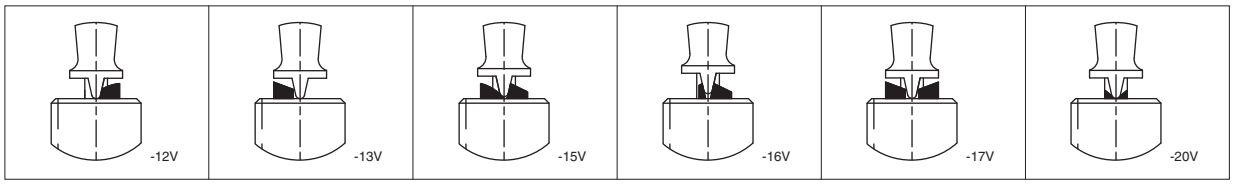

Functions 8 & 441R	Funct. 8, 5 & 441R	Functions 8 & 441R	Functions 4 & 9	Functions 7 & 442R	Functions 9 & 44

Note : -5V and -12V are not true locking levers : no pulling is required before actuation.

SPECIAL OPTIONS

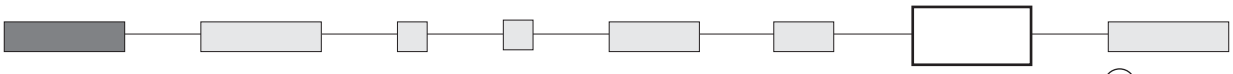

Blank No special requirement.

X408 Front panel sealing by two O-rings. Flatted bushing for precise orientation. Panel thickness : 8 mm (.314) max., 3 mm (.118) min. Protects the switch against water and dust.
Panel seal withstands 1 bar pressure and remains sealed even when switch is operated.

X545 Lever, bushing, housing, nuts and washers **with satin chrome finish**.

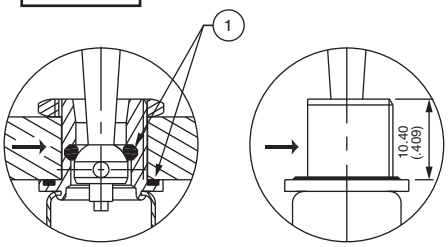

→ Flat ① O-rings

SPECIAL OPTIONS (continued)

X822 Threaded bushing Ø 15 (.590), with double flat
Not available with function 5 or locking levers.
Includes front panel sealing and X780 contact material.

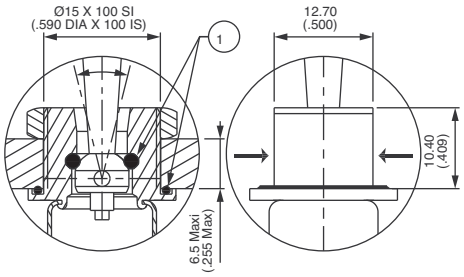

X822

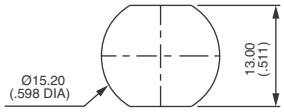

→ Flat
① O-rings

X780 Solid rivet - gold plated silver/nickel alloy contacts
Not available with function 5.

X910 **Switches for peak currents**

Peak current up to 80A (1 ms) 60VDC - double pole

12146 X910 ON - ON

- Contacts : solid rivet - silver/nickel alloy (AgNi)
- Max. current/voltage rating :
  3/80A (1 ms) 60VDC - 10.000 cycles
- Further specifications and dimensions : see previous pages
- General information on peak currents : see end of catalogue.

AGENCY APPROVAL

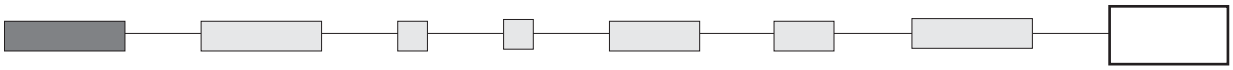

CECC CECC 96201-005 (high level - contacts X780)
CECC 96201-008 (low level - contacts AD2 or D)

Availability : consult factory for details of approved models.

Marking : to order switches marked CECC, complete above box with "CECC".
Blank : no agency approval required.

12000X778 series

High performance toggle switches - threaded bushing Ø 11,9 (15/32)

Distinctive features

A

❑ Approvals

CECC 96201-005
CECC 96201-008

MIL Standards MIL-DTL-3950 and MIL-DTL-83731

This range of professional toggle switches is suitable for use in military and other high specification environments.

❑ Contacts

Highly reliable contacts suitable for low level applications or power applications

❑ Pinned lever

The base of the switch lever is pinned to the bushing, thus earthing the lever to the bushing. This also provides strain relief to protect the switch if accidentally knocked.

❑ Double shell case

For high mechanical strength and high electrical insulation.

❑ Compact size

The small rear end of the switch allows space saving behind the panel.

❑ Finish

Black finish on body, bushing, lever and hardware.

❑ Sealing

Panel sealed to IP 67, these switches are frontal sealed by two O-rings and have full rear end sealing.

❑ Accessories

A comprehensive range of protection boots (both full and half length), locking levers and security caps are available.

The company reserves the right to change specifications without notice.

ELECTRICAL SPECIFICATIONS

- Max. current/voltage rating with resistive load : 4A 28VDC
- Minimum load : 10mA 50mV, 10µA 5VDC
  When used above 300mA 28VDC, the gold plating is removed on contact areas and is considered only as a protection against oxidation during storage.
- Initial contact resistance : 10 mΩ max.
- Insulation resistance : 1.000 MΩ min. at 500VDC
- Dielectric strength :
  1.000 Vrms 50 Hz min. between terminals
  2.000 Vrms 50 Hz min. between poles
  2.000 Vrms 50 Hz min. between terminals and frame
- Contact bounce : 2 ms max.
- Electrical life :
  - At 4A 28VDC :
  20.000 cycles (10.000 for functions 5, 4-1R, 4-2R)
  - At low level (50mV 10mA) :
  150.000 cycles (switches with 2 maintained positions)
  100.000 cycles (switches with 3 maintained positions)
  50.000 cycles (momentary functions 7, 8, 4-1R, 4-2R, 5)

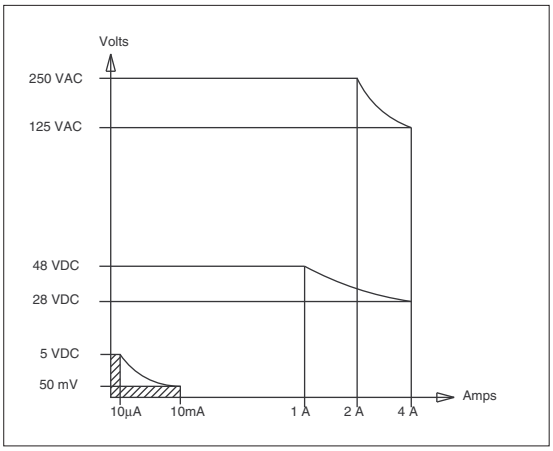

MATERIALS

- Case : diallylphthalate (DAP) with plastic external shell (epoxy sealed)
- Actuator : brass, black chrome plated
- Bushing : brass, black chrome plated
- Contacts : solid rivet - gold plated silver/nickel alloy

SEALING

- Front panel sealing by two O-rings
  Flatted bush for precise orientation
- Panel seal withstands 1 bar pressure and remains sealed even when the switch is operated.
- Epoxy sealed terminals
- Splash-proof case

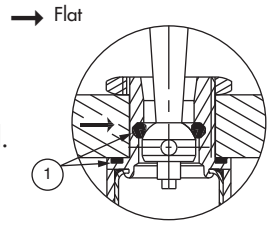

① O-rings

GENERAL SPECIFICATIONS

- Torque : 1,50 Nm (1.10 Ft.lb) max. applied to nut
- Panel thickness : 8 mm (.314) max. - 3 mm (.118) min.
- Shock test : 50g - 11ms (IEC 68-2-27)
- Vibrations : 10-500 Hz - 10g (IEC68-2-6)
- Operating temperature : -40°C to +85°C
- Humidity test : 56 days, 93 % R.H., 40°C (IEC 68-2-3)
- Salt spray test : 96 hours (IEC 68-2-11)

APPROVALS

Many models within this range have full CECC approval and are marked CECC. Please consult factory for list of approved models.

12000X778 series

High performance toggle switches - threaded bushing Ø 11,9 (15/32)

Overview

A

MODEL STRUCTURE

12				
SERIES	Terminals and bushings	Number of poles	Electrical functions	Momentary

Terminals and bushings

1 Solder lug terminals, threaded bushing Ø 11,9 (15/32)
2 Straight PC terminals, threaded bushing Ø 11,9 (15/32)

Number of poles

4 Double pole
5 Three pole
6 Four pole

Electrical functions

6	ON	-	ON
9	ON	OFF	ON
7	MOM	OFF	MOM
8	ON	OFF	MOM
4	ON	ON	ON
	ON	ON	MOM Δ
	MOM	ON	MOM Δ
5		ON	MOM

Function 4
. For 2 and 4 poles only.
. Δ Must not have blank in "momentary" box.

Momentary

1R	ON	ON	MOM
2R	MOM	ON	MOM

. For function 4 only.
. Leave blank for other functions.

OPTIONS

Fluorescent tip

Blank None
-038 White fluorescent tip to lever

Levers

Blank Standard lever
-12 Short lever

Locking levers

-1V 1 locked position
-2V 2 locked positions
-3V 3 locked positions

Other : see following pages.

X778

High performance fully sealed black switches.

Approval

CECC

Availability : Consult factory for details of approved models.

ABOUT THIS SERIES
On the following pages, you will find successively :
- model structure of switches
- options in the same order as in above chart

Dimensions : first dimensions are in mm while inches are shown as bracketed numbers.

Sealing boots can be used to further protect the switches against dust and water. They are presented in section H.

Mounting accessories : standard hardware supplied with all models : 1 hex nut 14 mm (.551) across flats, part number U41. This nut is presented after model structure of switches.

Security caps are available to prevent inadvertent lever operation. They are presented in section I.

Packaging unit : 2 pole models : 25 pieces
3 and 4 pole models : 20 pieces .

MODEL STRUCTURE

12000X778 series

High performance toggle switches - threaded bushing Ø 11,9 (15/32)

Fully sealed - black

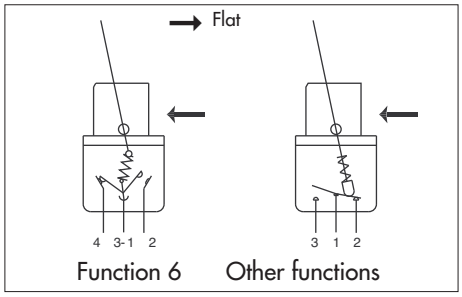

Typical angle of throw (A)	
Function 6	26°
Functions 9, 7, 8, 4	20°
Function 5	12°

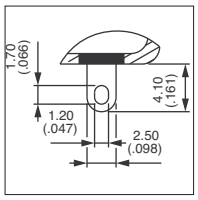

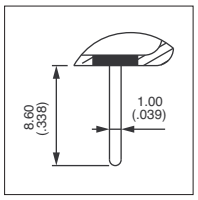

A

MODEL STRUCTURE

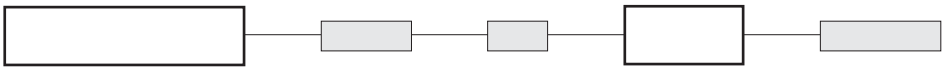

Shown with standard lever

Solder lug terminals - double pole

	I	II	III
12146 X778	ON	-	ON
12149 X778	ON	OFF	ON
12147 X778	MOM	OFF	MOM
12148 X778	ON	OFF	MOM
12144 X778	ON	ON	ON
12144-1R X778	MOM	ON	ON
12144-2R X778	MOM	ON	MOM
12145 X778		ON	MOM

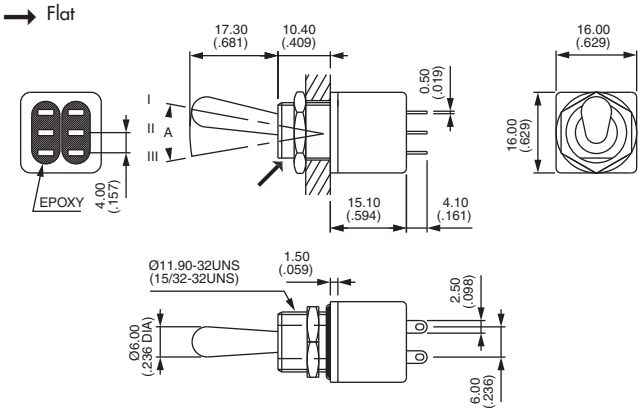

Solder lug terminals - three pole

	I	II	III
12156 X778	ON	-	ON
12159 X778	ON	OFF	ON
12157 X778	MOM	OFF	MOM
12158 X778	ON	OFF	MOM

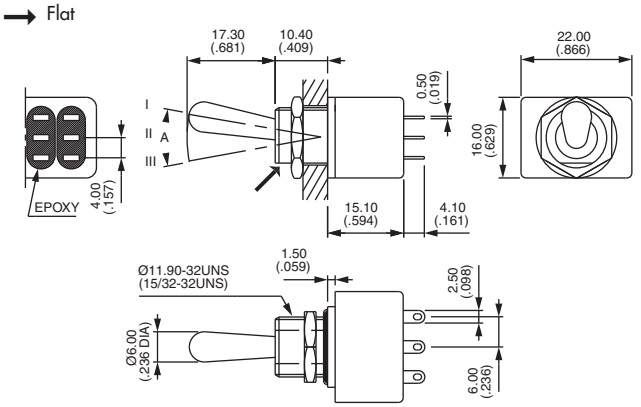

Solder lug terminals - four pole

	I	II	III
12166 X778	ON	-	ON
12169 X778	ON	OFF	ON
12167 X778	MOM	OFF	MOM
12168 X778	ON	OFF	MOM
12164 X778	ON	ON	ON
12164-1R X778	ON	ON	MOM
12164-2R X778	MOM	ON	MOM

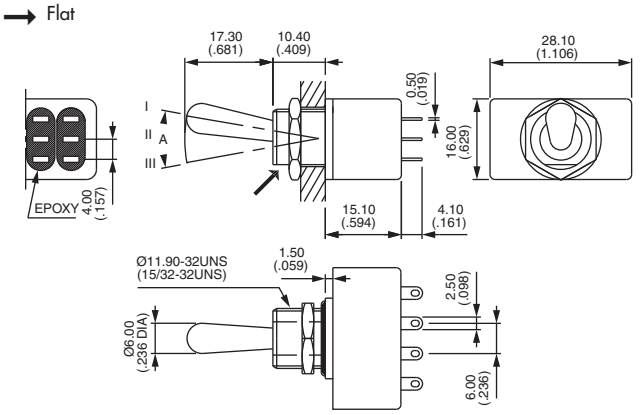

12000X778 series

High performance toggle switches - threaded bushing Ø 11,9 (15/32)

Fully sealed - black

MODEL STRUCTURE

A

Straight PC terminals - double pole ▲

	I	II	III
12246 X778	ON	-	ON

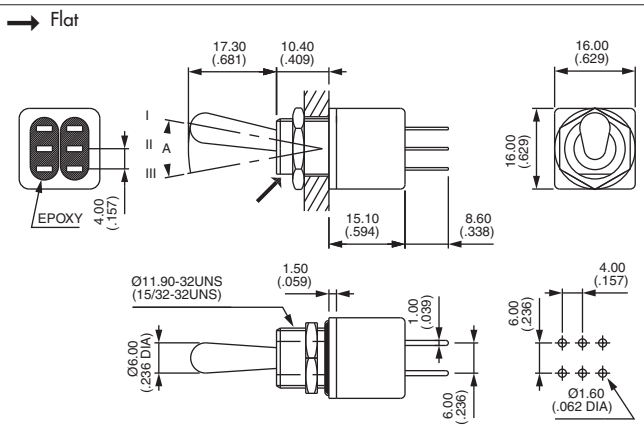

Straight PC terminals - three pole ▲

	I	II	III
12256 X778	ON	-	ON

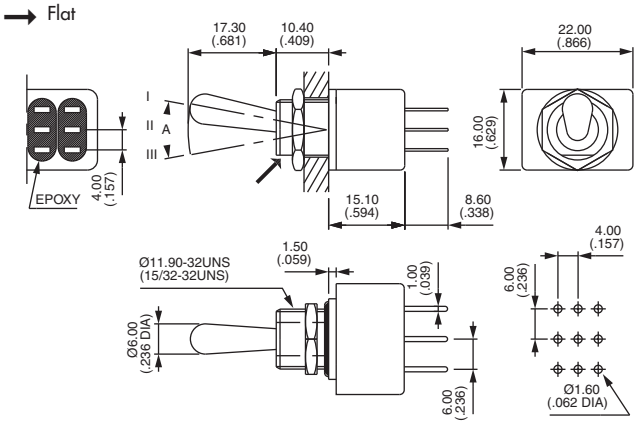

Straight PC terminals - four pole ▲

	I	II	III
12266 X778	ON	-	ON

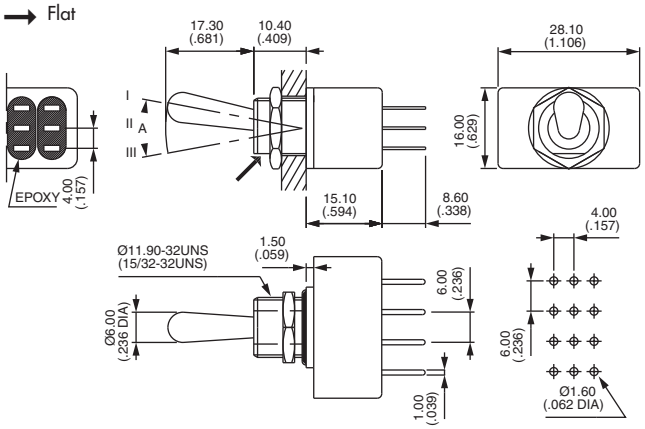

Positions and connections, see next page.

PANEL CUT-OUT

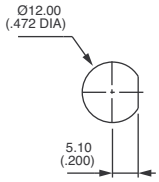

STANDARD HARDWARE

Hex nut

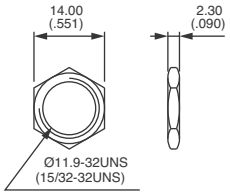

U41 (matt black)

▲ **3,5 mm (.138) short terminals** available on request for function 6. Standard for functions 9, 7, 8, 4 and 5.

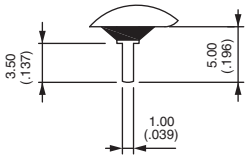

FUNCTION	LEVER POSITION AND CONNECTIONS I	II	III (Flat)	TERMINAL IDENTIFICATION
12146	ON (1-3)-4 (5-7)-8	-	ON (1-3)-2 (5-7)-6	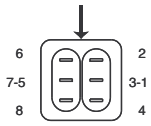
12147 12148 12149 12148CT	MOM ON ON MOM 1-2 4-5	OFF OFF OFF OFF	MOM MOM ON ON 1-3 4-6	→ Flat
12145	-	ON 1-2 4-5	MOM 1-3 4-6	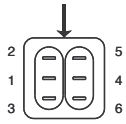
12144 12144-1R 12144-2R	ON MOM MOM 1-2 4-5	ON ON ON 1-3 4-5	ON ON MOM 1-3 4-6	
12156	ON (1-3)-4 (5-7)-8 (9-11)-12	-	ON (1-3)-2 (5-7)-6 (9-11)-10	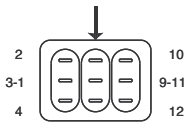
12166	ON 1A - 3A 1C - 3C 1E - 3E 1G - 3G	-	ON 1A - 2A 1C - 2C 1E - 2E 1G - 2G	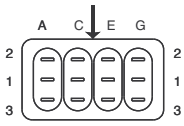
12164	ON 1A - 2A 1C - 2C 1E - 2E 1G - 2G	ON 1A - 2A 1C - 3C 1E - 2E 1G - 3G	ON 1A - 3A 1C - 3C 1E - 3E 1G - 3G	

→ External jumper (added by customer)

12144

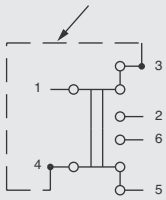

12144-1R

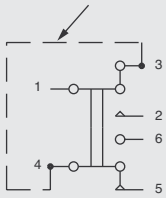

12144-2R

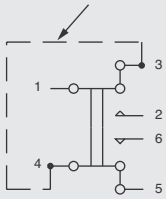

12164

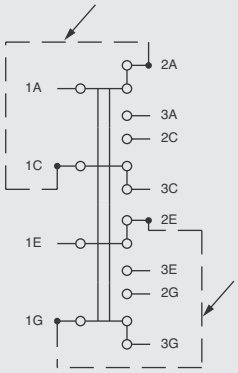

12000X778 series

High performance toggle switches - threaded bushing Ø 11,9 (15/32)

OPTIONS

A

FLUORESCENT TIP

Blank None

-038 White fluorescent tip.
Becomes luminous when submitted to ultra-violet rays.

Standard lever

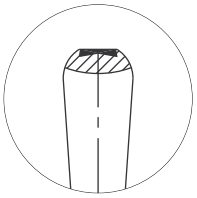

Locking lever

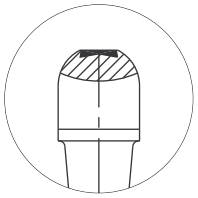

LEVERS / LOCKING LEVERS

Dash compulsory before lever code.

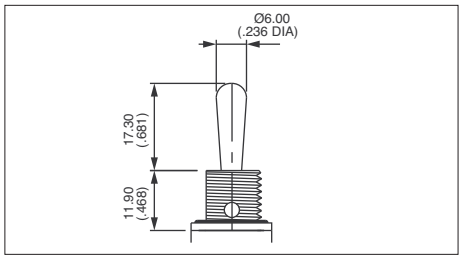

Standard lever (leave blank)

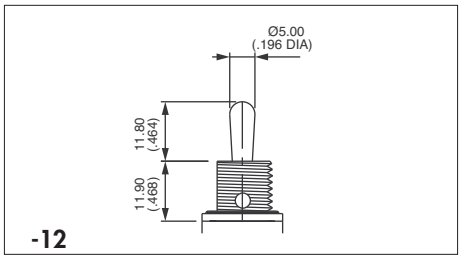

Short lever

Sealing boots : see section H.
Security caps : see section I.

Locking levers

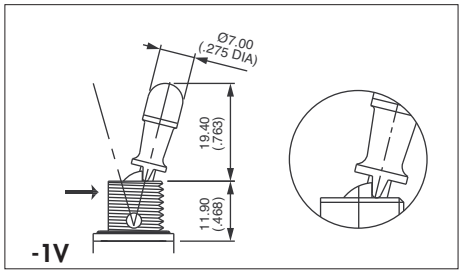

1 locked position (function 6)
Typical angle of throw : 26°

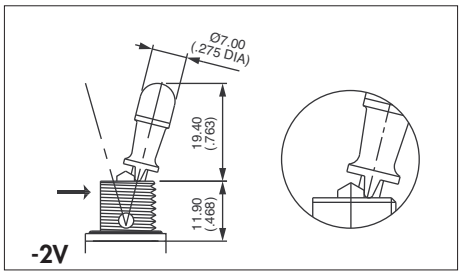

2 locked positions (function 6)
Typical angle of throw : 26°

Flat

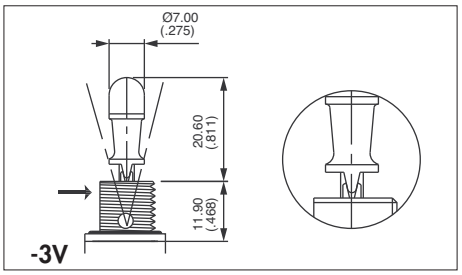

3 locked positions (functions 9 and 4)
Typical angle of throw : 20°

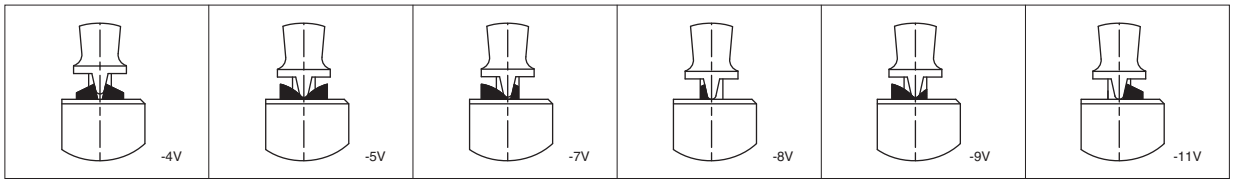

Functions 9 & 4 | Functions 7 & 442R | Functions 8 & 441R | Functions 8, 9, 44 & 441R | Functions 8 & 441R | Functions 8, 9, 44 & 441R

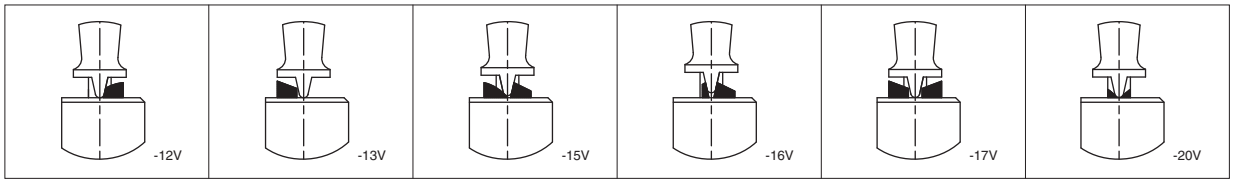

Functions 8 & 441R | Functions 8 & 441R | Functions 8 & 441R | Functions 4 & 9 | Functions 7 & 442R | Functions 9 & 44

Note : -5V and -12V are not true locking levers : no pulling is required before actuation.

AGENCY APPROVAL

CECC CECC 96201-005 and CECC 96201-008

Availability : consult factory for details of approved models.
Marking : to order switches marked CECC, please complete above box with "CECC". Blank : no agency approval required.

1000 series

Toggle switches - metal lever - economy range

Distinctive features and specifications

- ❑ **Butt action contacts**
- ❑ **Optional insulated levers (X213 and X490)**

A

ELECTRICAL SPECIFICATIONS

- Max. current/voltage rating with resistive load :
  - silver contacts (A) : 6A 30VDC
  - silver plated copper contacts (C) : 1A 30VDC
- Initial contact resistance : 10 mΩ max.
- Insulation resistance : 1.000 MΩ min. at 500VDC
- Dielectric strength :
  2.000 Vrms 50 Hz min. between terminals
  2.500 Vrms 50 Hz min. between terminals and frame
- Electrical life : 10.000 cycles at full load

MATERIALS

- Case :
  - function 1 : phenolic resin
  - funct. 6 & 9 : polyamide
- Actuator :
  - brass, nickel plated (1010 and 1020 models)
  - polyamide (1030 models)
- Bushing : brass, nickel plated
- Contacts :
  A : silver
  C : copper, silver plated

GENERAL SPECIFICATIONS

- Torque : 1,50 Nm (1.10 Ft.lb) max. applied to nut
- Panel thickness : 5 mm (.196) max.
- Operating temperature : -20°C to +55°C

ABOUT THIS SERIES

Dimensions : first dimensions are in mm while inches are shown as bracketed numbers.

Sealing boots are available to protect the switches against dust and water. They are presented in section H.

Mounting accessories : standard hardware supplied :
- silver contact models : 1 hex nut U166 + 1 knurled nut U411
- copper contact models : 1 hex nut U42 + 1 knurled nut U411

Packaging unit : 25 or 40 pieces depending on model.

The company reserves the right to change specifications without notice.

1000 series

Toggle switches - metal lever - economy range

Solder lug and quick-connect terminals - screw terminals

MODEL STRUCTURE

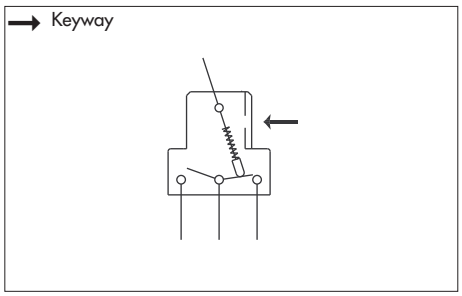

- 2 and 3 positions
- Single pole configurations

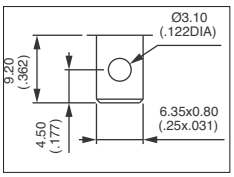

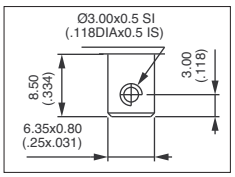

MODEL STRUCTURE

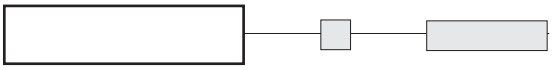

Solder lug and quick-connect terminals

	I	II	III
1011	ON	-	OFF
1016	ON	-	ON
1019	ON	OFF	ON

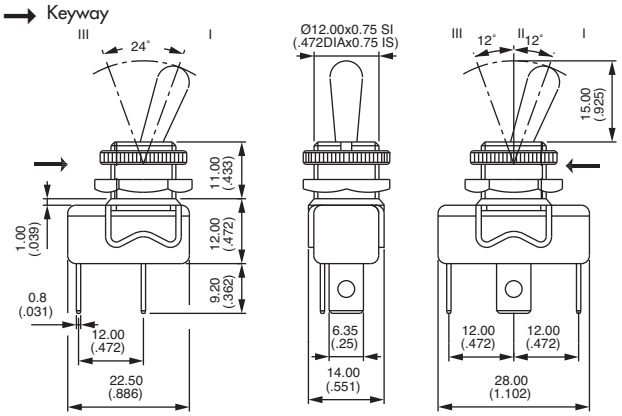

Screw terminals

	I	II	III
1021	ON	-	OFF

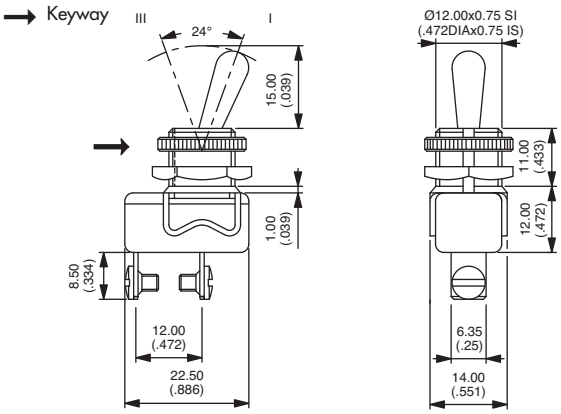

PANEL CUT-OUT

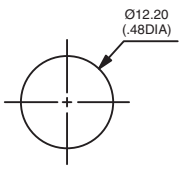

CONTACT MATERIALS

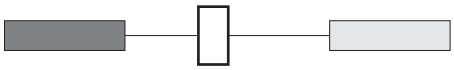

A Silver
C Copper, silver plated

SPECIAL OPTIONS WITH INSULATED LEVER

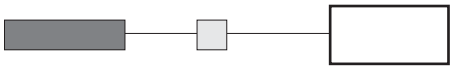

X213 Silver plated copper contacts (C)

	I		II
1031CX213	OFF	-	ON

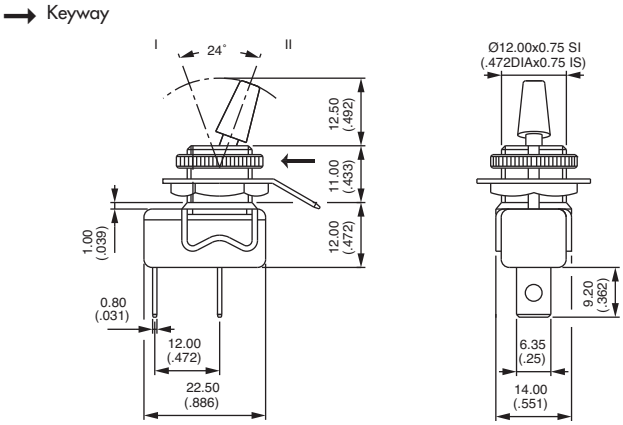

Ground connector **U187** compulsory if the panel is not metallic or not connected to ground.
Order separately, see section I.

X490 Available with silver contacts (A) or silver plated copper contacts (C)

	I	II	III
1036 X490	ON	-	ON
1039 X490	ON	OFF	ON

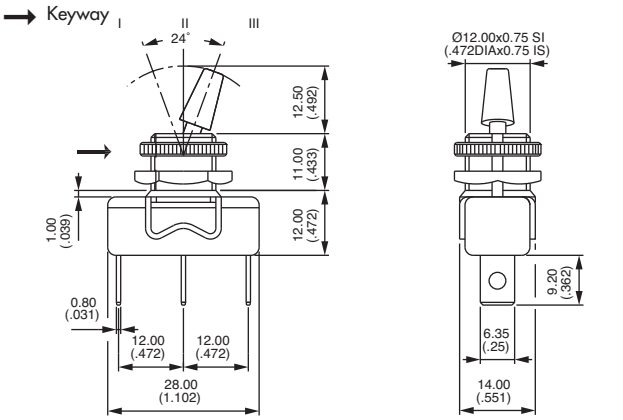

4600 and 4400 series

Toggle switches

Distinctive features and specifications

- ❑ **High current/voltage rating in a small case**
- ❑ **Butt action contacts**
- ❑ **Insulated or metal lever**
- ❑ **UL, CSA and VDE (EN 61058-1) approved**

A

ELECTRICAL SPECIFICATIONS

- Max. current/voltage rating with resistive load (silver contacts A) : 4A 250VAC - 6A 125VAC
- Approved electrical ratings : see table below
- Initial contact resistance : 10 mΩ max.
- Insulation resistance : 1.000 MΩ min. at 500VDC
- Dielectric strength :
  2.000 Vrms 50 Hz min. between terminals
  2.500 Vrms 50 Hz min. between poles and between terminals and frame
- Electrical life : 10.000 cycles at full load

APPROVALS	MODELS	POLES	FUNCTIONS	APPROVED RATINGS
UL/CSA	4600A	1-2	1-6-9	3A 250VAC - 6A 125VAC
VDE (EN 61058-1)	4400A	1-2	1-6	4(2)A 250VAC
	4600A	1-2-3	1-6	4(2)A 250VAC

MATERIALS

- Case : melamine phenolic
- Actuator :
  - insulated : polyamide ,6-6
  - non-insulated : brass, nickel plated
- Bushing :
  - insulated : polyamide 6-6
  - non-insulated : brass, nickel plated
- Contacts : silver

GENERAL SPECIFICATIONS

- Torque : 0,95 Nm (.70 Ft.lb) max. applied to nut
- Panel thickness : 5 mm (.196) between 2 nuts
- Operating temperature : -20°C to +55°C
- Hand soldering : 270°C max. for 10 seconds max. - iron Ø3 (.118)

AGENCY APPROVALS

EN 61058-1

Availability : see above chart.
Marking : VDE approved models are standard marked.
To order switches marked UL-CSA, complete appropriate box of ordering format.

The company reserves the right to change specifications without notice.

MODEL STRUCTURE

4			
SERIES	Terminals	Number of poles	Electrical functions

Terminals

4	Straight PC
6	Solder lug and quick-connect
6../8	Quick-connect 4,7 x 0,8 mm

Number of poles

3	Single pole
4	Double pole
5	Three pole

Electrical functions

1	ON	-	OFF
6	ON	-	ON
9	ON	OFF	ON

OPTIONS

Contact materials

A	Silver

Actuators

1 and 2 pole models

-2	Insulated flat lever Standard

3 pole models

Blank	Round metal lever
-32	Insulated round lever, black

Actuator colours

1	Blue
2	Black (std)
3	Green
4	Grey
5	Yellow
6	Red
7/1	White
9	Orange

For SP and DP models only.

Approvals

UL
CSA
VDE (EN 61058-1)

ABOUT THIS SERIES

Dimensions : first dimensions are in mm while inches are shown as bracketed numbers.

NOTICE : please note that not all combinations of above numbers are available.
Refer to the following pages for further information.

Sealing boots are available on 3 pole models to protect the switches against dust and water. They are presented in section H.

Mounting accessories : standard hardware supplied with all models : 1hex nut U166 and 1 knurled nut U520 in the same colour as the lever (insulated models) or U411 nickel plated (metal lever models).
Standard and special hardware available are presented in section I.

Packaging unit : 20 pieces.

4600 and 4400 series

Toggle switches

Insulated flat lever

MODEL STRUCTURE

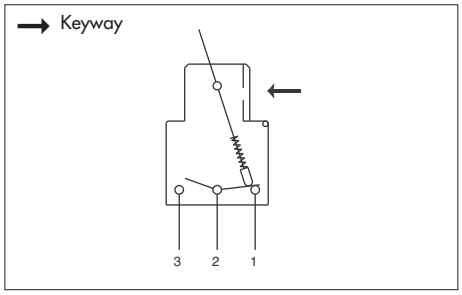

- Solder lug/quick-connect terminals 2,8 x 0,5 (.110 x .019)
- Straight PC terminals or quick-connect terminals 4,7 x 0,8 (.185 x .031)
- 2 and 3 maintained positions
- 1 and 2 pole configurations

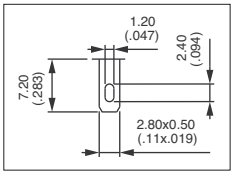

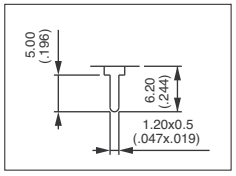

MODEL STRUCTURE

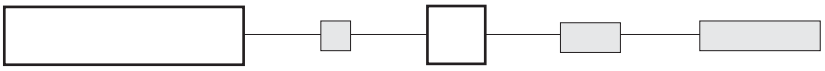

Solder lug/quick-connect terminals - single pole

	III	II	I
4631 -2	ON	-	OFF
4636 -2	ON	-	ON
4639 -2	ON	OFF	ON

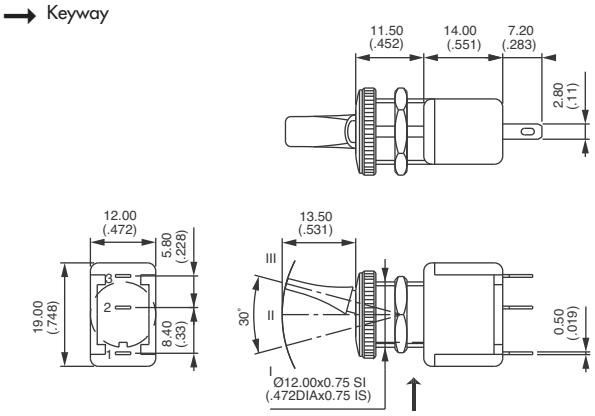

Solder lug/quick-connect terminals - double pole

	III	II	I
4641 -2	ON	-	OFF
4646 -2	ON	-	ON
4649 -2	ON	OFF	ON

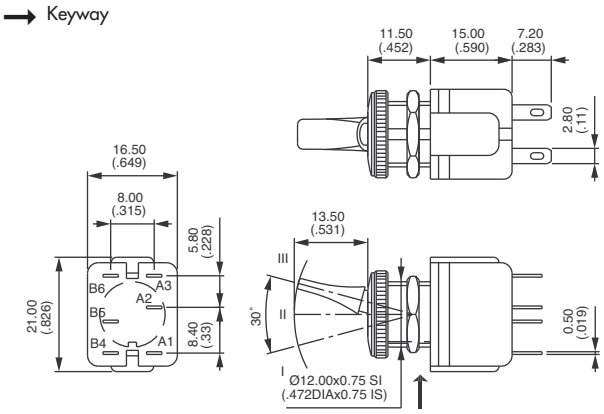

Straight PC terminals - single pole

	III	II	I
4431 -2	ON	-	OFF
4436 -2	ON	-	ON
4439 -2	ON	OFF	ON

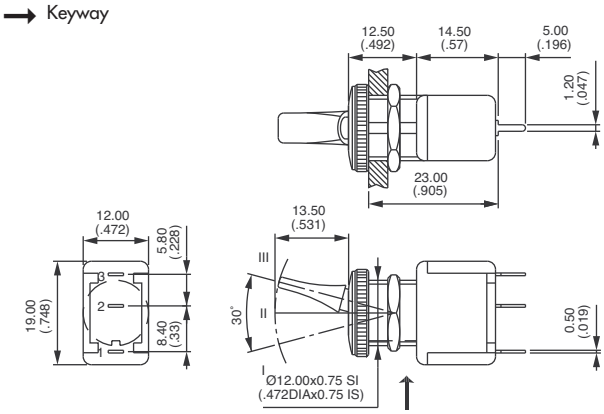

4600 and 4400 series

Toggle switches

Insulated flat lever

Straight PC terminals - double pole

	III	II	I
4441 -2	ON	-	OFF
4446 -2	ON	-	ON
4449 -2	ON	OFF	ON

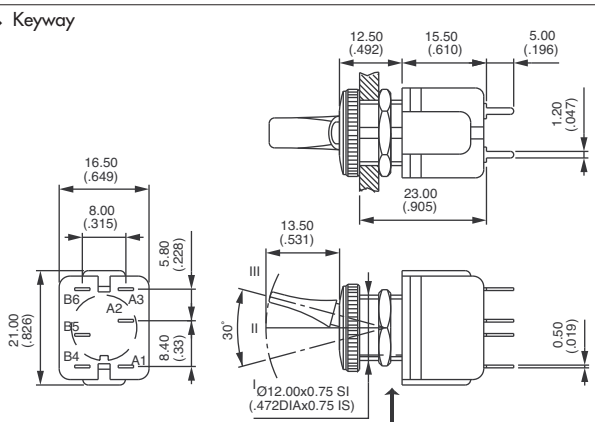

Quick-connect terminals 4,7 x 0,8 (.185 x .031) - single pole

	I		II
4631/8 -2	ON	-	OFF
4636/8 -2	ON	-	ON

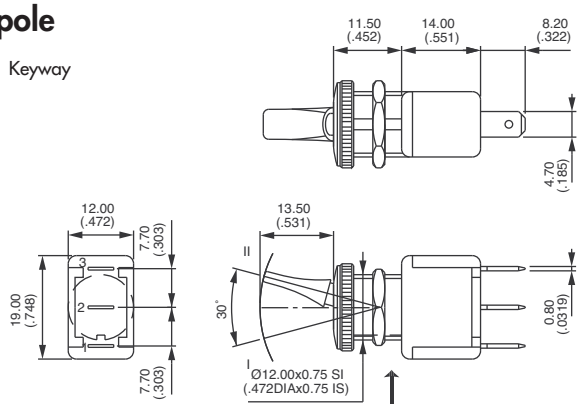

PANEL CUT-OUT

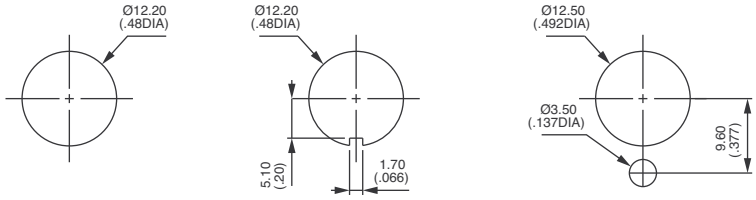

4600 and 4400 series

Toggle switches

Round lever - three pole

MODEL STRUCTURE

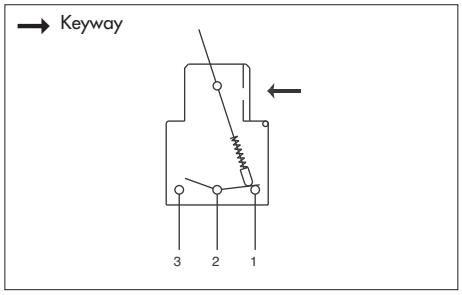

- Solder lug or straight PC terminals
- 2 and 3 maintained positions

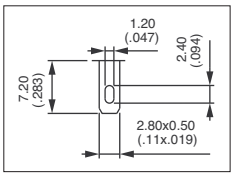

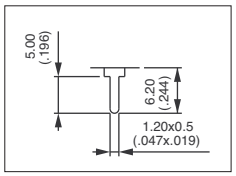

A

MODEL STRUCTURE

Solder lug terminals - metal lever

	III	II	I
4651	ON	-	OFF
4656	ON	-	ON
4659	ON	OFF	ON

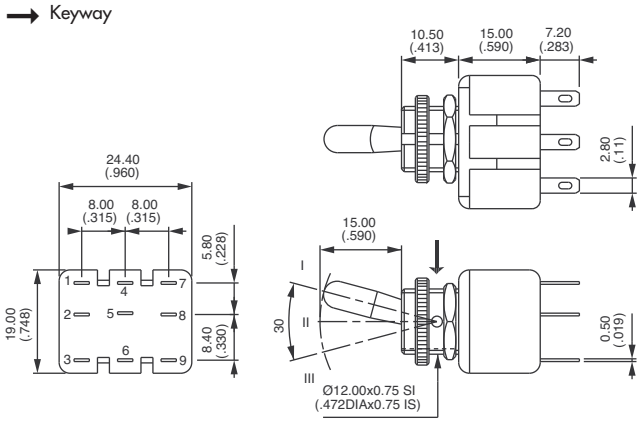

Straight PC terminals - metal lever

	III	II	I
4451	ON	-	OFF
4456	ON	-	ON
4459	ON	OFF	ON

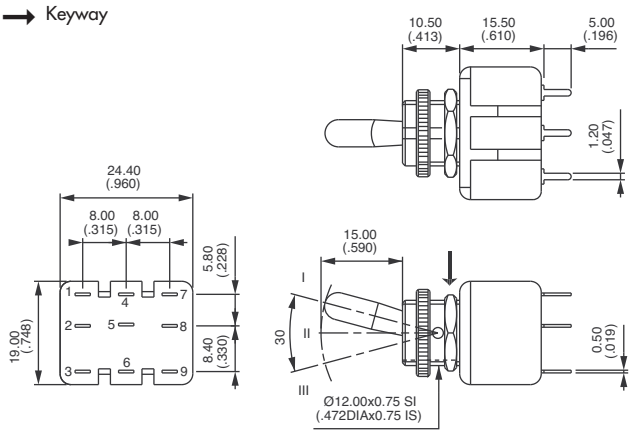

Solder lug terminals - insulated lever - silver contacts

	I		II
4651A-32	ON	-	OFF
4656A-32	ON	-	ON

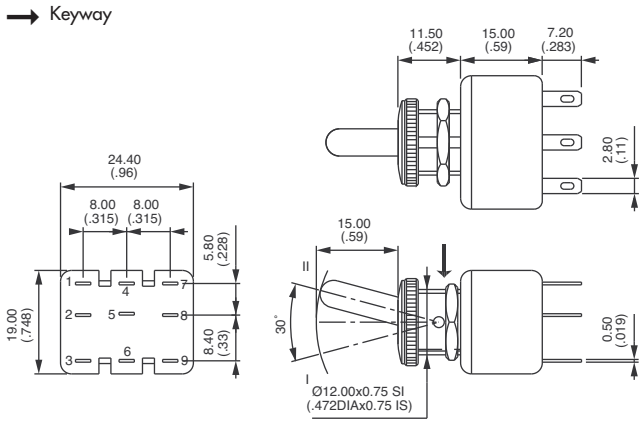

CONTACT MATERIAL

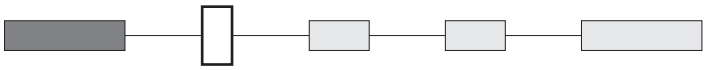

A Silver

ACTUATORS

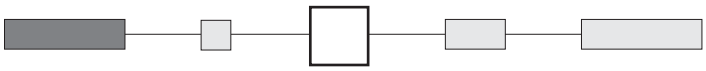

Blank Round, metal lever for 3 pole only

-2 Insulated flat lever (for single and double pole only)

-32 Black insulated round lever (for 3 pole only)

ACTUATOR COLOURS

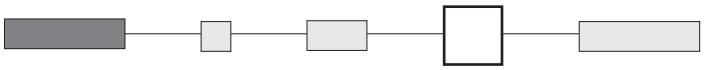

1 Blue
2 Black (standard)
3 Green
4 Grey
5 Yellow
6 Red
7/1 White
9 Orange

For insulated flat lever
Black : standard colour - reduced delivery time
Minimum order of 500 pieces for non-standard colours.

APPROVALS

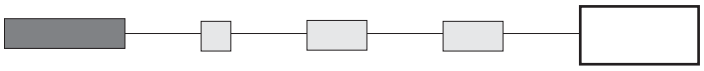

UU (UL-CSA) Single and double pole only

Availability : see specifications for details of approved models.

Marking : to order switches marked UL-CSA, complete above box with 'UU".
Other approvals available as standard, see specifications.

600H and 600NH series

Toggle switches - high amperage

Distinctive features and specifications

A

❑ Construction

Terminal and contact support are manufactured from a single piece of metal. The contacts are resistance-welded to the terminal for increased mechanical strength.

❑ Rating

These switches are suitable for motor loads and power applications up to 15A 250VAC or 10A 400VAC

❑ Metal or insulated lever

❑ UL, CSA and NF-VDE (EN 61058-1) approved

ELECTRICAL SPECIFICATIONS

- Max. current/voltage ratings : see tables below
- Peak current : 30A max. during 1/2 sine, 250VAC
- Initial contact resistance : 10 mΩ max.
- Insulation resistance : 1.000 MΩ min. at 500VDC
- Dielectric strength :
  2.000 Vrms 50 Hz min. between terminals
  2.500 Vrms 50 Hz min. between terminals and frame
- Electrical life : 10.000 cycles at full load

APPROVED RATINGS

MODELS	FUNCTIONS	600H - 600NH		
		UL	CSA	NF-VDE
		UL 1054	CSA 22-2	EN 61058-1
Single and double pole	ON - OFF (1)	15A 1/2 HP 125-250VAC		10(4)A 400VAC T 85/55 (600H) T 125/55 (600NH)
	ON - ON (6)			
	Other (4-5-7-8-9)	10A 1/2 HP 125-250VAC		
Three pole	ON - OFF (1) & ON - ON (6)	15A 1/2 HP 125-250VAC		
	Other (4-5-7-8-9)	10A 1/2 HP 125-250VAC		

- FOR INFORMATION-
Max. current/voltage rating w. resistive load

Functions	Ratings	Electrical life
ON - OFF ON - ON	15A 250VAC 10A 24VDC 15A 12VDC	10.000 cycles
ON OFF ON	15A 250VAC 5A 24VDC	6.000 cycles 10.000 cycles
Other	15A 125VAC 12A 250VAC 5A 24VDC	10.000 cycles

MATERIALS

- Case : polyester UL94-V0
- Actuator :
  - 600H : brass, nickel plated
  - 600NH : black polyamide
- Bushing : brass, nickel plated
- Contacts : silver/nickel alloy

GENERAL SPECIFICATIONS

- Torque : 1,50 Nm (1.10 Ft.lb) max. applied to nut
- Panel thickness : 4,5 mm (.177) max. between 2 nuts
- Operating temperature : -20°C to +55°C

The company reserves the right to change specifications without notice.

AGENCY APPROVALS

EN 61058-1 EN 61058-1

Availability : see chart on previous page.

Marking : approved models are standard marked.

PANEL CUT-OUT

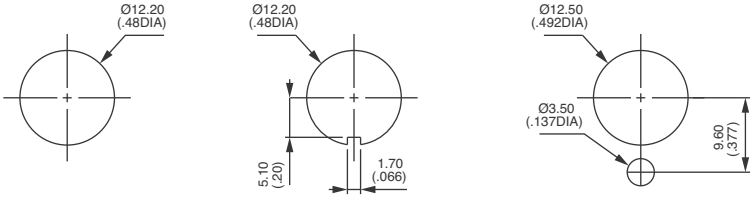

MOUNTING RECOMMENDATIONS

Connection

- For quick-connect terminals, use 6,3 x 0,8 mm normalized female connectors.
- For screw terminals, use :
  either 1,5 mm² or 2,5 mm² rigid wires,
  or prepared stripped and tin plated flexible wires,
  or prepared flexible wires with crimped termination per EN 50027 (DIN 46228)

Ground connector

Compulsory if the panel is not metallic or not connected to ground. Should also be used when front face nut is of plastic material.
Order separately, see section I.

600H and 600NH series

Toggle switches - high amperage

Overview

A

MODEL STRUCTURE

6

SERIES

Number of poles

3	Single pole
4	Double pole
5	Three pole

For 4 pole, see 660 series.

Electrical functions

1	ON	-	OFF
5	MOM	-	ON
6	ON	-	ON
7	MOM	OFF	MOM
8	ON	OFF	MOM
9	ON	OFF	ON
4	ON	ON	ON
	ON	ON	MOM Δ
	MOM	ON	MOM Δ

Δ Must not have blank in "momentary" box.

Actuator and terminals

H	Metal lever, screw terminals
H/2	Metal lever, solder lug/quick-connect terminals
NH	Insulated lever, screw terminals
NH/2	Insulated lever, solder lug/quick-connect terminals
NH/3	Insulated lever, normalized quick-connect terminals

Momentary

-1R	ON	ON	MOM
-2R	MOM	ON	MOM

OPTIONS

Options

For models with metal lever only

T	Tropicalized case
K	Front panel sealing
L	Bushing 16 mm (.629)
LUXE	Chrome finish
TKLUXE	Front panel sealing + T and LUXE
G	Black finish
GK	Black finish + front panel sealing
G-038	Luminous tip on lever

Locking levers

-1V	1 locked position
-2V	2 locked positions
-3V	3 locked positions

ABOUT THIS SERIES

Dimensions : first dimensions are in mm while inches are shown as bracketed numbers.

NOTICE : please note that not all combinations of above numbers are available.
Refer to the following pages for further information.

Security caps are available to prevent inadvertent lever operation. They are presented in section I.

Sealing boots are available on 600H series to protect the switches against dust and water. They are presented in section H.

Mounting accessories : standard hardware supplied with all models :
- 600H and series : 1 hex nut U166 and 1 knurled nut U411
- 600NH series : 1 hex nut U166 and 1 knurled nut U522

Standard and special hardware are presented in section I.

Packaging unit : 25 pieces.

MODEL STRUCTURE

600H series

Toggle switches - high amperage - metal lever

Solder lug/quick-connect terminals - screw terminals

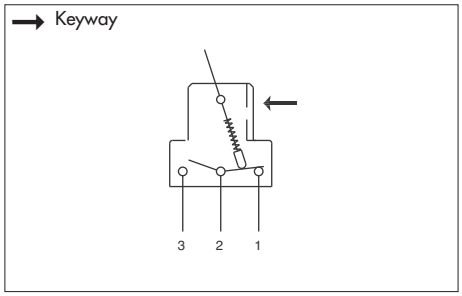

- 2 and 3 maintained or momentary positions
- Solder lug/quick-connect terminals 6,35 x 0,8 (.250 x.031) or screw terminals + clamp
- 1, 2 and 3 pole configurations
- Normalized quick-connect terminals (/3) optional. On request.

A = Angle of throw

600H/2

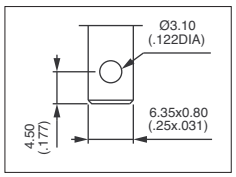

600H

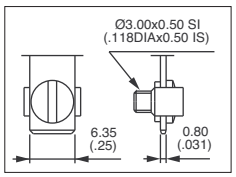

A

MODEL STRUCTURE

Single pole

Solder lug	Screw	A	III 2-1	II	I 2-3
631H/2	**631H**	30°	ON	-	OFF
635H/2	**635H**	26°	MOM	-	ON
636H/2	**636H**	30°	ON	-	ON
637H/2	**637H**	30°	MOM	OFF	MOM
638H/2	**638H**	36°	ON	OFF	MOM
639H/2	**639H**	36°	ON	OFF	ON

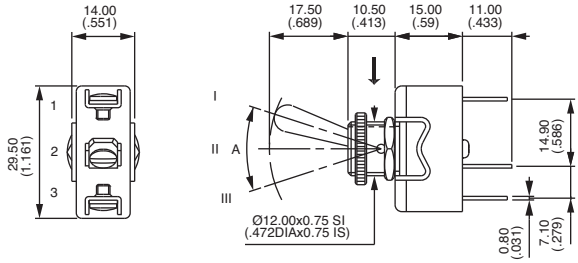

Angle of throw with K sealing option :
functions 1, 5, 6, 7 : 26° - functions 8, 9 : 32°

Double pole

Solder lug	Screw	A	III 2-1 5-4	II	I 2-3 5-6
641H/2	**641H**	26°	ON	-	OFF
644H/2	**644H***	33°	ON	ON	ON
644H/2-1R	**644H-1R***	33°	ON	ON	MOM
644H/2-2R	**644H-2R***	33°	MOM	ON	MOM
645H/2	**645H**	26°	MOM	-	ON
646H/2	**646H**	26°	ON	-	ON
647H/2	**647H**	26°	MOM	OFF	MOM
648H/2	**648H**	26°	ON	OFF	MOM
649H/2	**649H**	32°	ON	OFF	ON

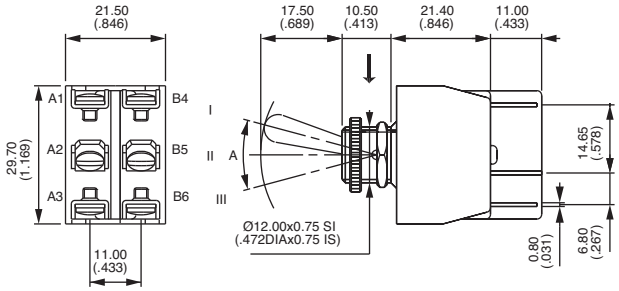

* Function 4 : SP in DP case - see end of catalogue.

Three pole

Solder lug	Screw	A	III 2-1 5-4 8-7	II	I 2-3 5-6 8-9
651H/2	**651H**	24°	ON	-	OFF
655H/2	**655H**	15°	MOM	-	ON
656H/2	**656H**	24°	ON	-	ON
657H/2	**657H**	24°	MOM	OFF	MOM
658H/2	**658H**	24°	ON	OFF	MOM
659H/2	**659H**	28°	ON	OFF	ON

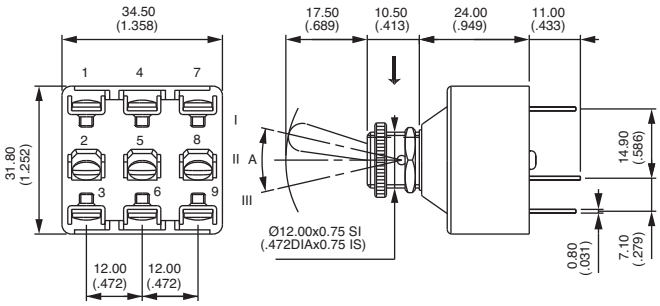

600H series

Toggle switches - high amperage - metal lever

OPTIONS

OPTIONS FOR 600H SERIES ONLY

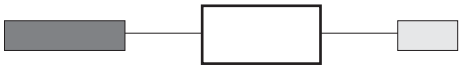

Complete above box with desired options in the same order as below

T Tropicalized diallylphthalate case (-40°C to +85°C)

K Front panel sealing by 1 O-ring and sealing washer.
Protects the switch against water and dust. Panel seal withstands 1 bar pressure and remains sealed even when switch is operated

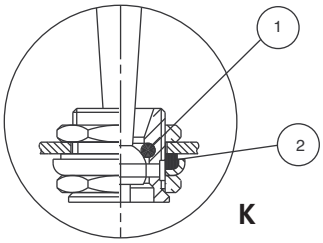

① O-ring ② Sealing washer

L Special threaded bushing, length 16 mm (.629)

LUXE Chrome plated lever and cap nut U117

TK LUXE Options T, K and LUXE.

G Black finish on bushing, lever and nuts.
Includes tropicalization (option T)

GK Front panel sealing by O-ring and sealing washer (as described in option TK LUXE)
+ option G

038

G-038 Option G + fluorescent tip on lever.
White fluorescent tip becomes luminous when submitted to ultra violet rays.

LOCKING LEVERS (1 and 2 pole models)

For 3-pole models, refer to 6000 series.

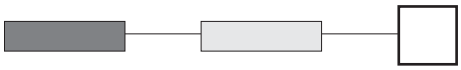

→ Keyway

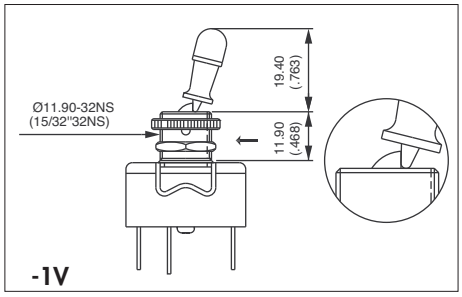

1 locked position

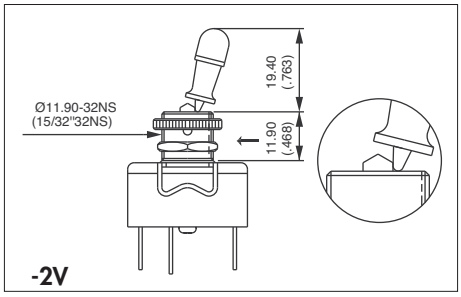

2 locked positions

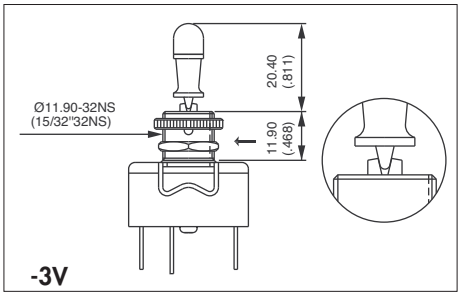

3 locked positions

ACTUATOR OPTIONS (1 and 2 pole models)

-4 30 mm (1.181) long actuator
-5 40 mm (1.574) long actuator
-6 Retro style actuator
(gold plated or chrome plated : on request)

- Ergonomic flat plastic actuator : add U282 at the end of switch model number.

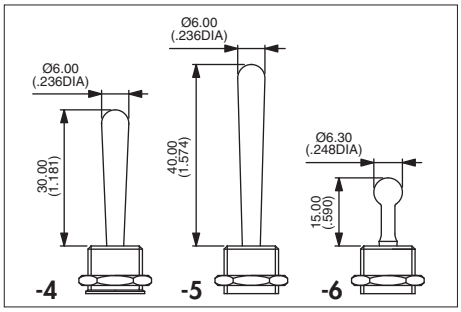

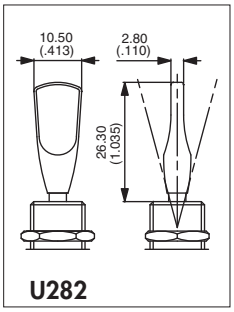

MODEL STRUCTURE

600NH series

Toggle switches - high amperage - insulated lever

Solder lug/quick-connect terminals - screw terminals

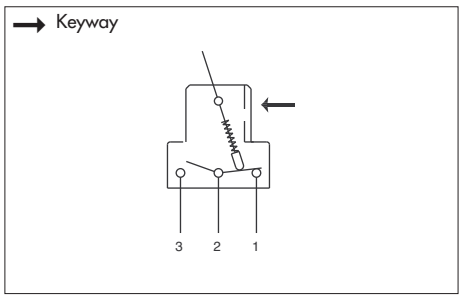

- 2 and 3 maintained or momentary positions
- Solder lug/quick-connect terminals 6,35 x 0,8 (.250 x.031) or screw terminals + clamp
- 1, 2 and 3 pole configurations
- Normalized quick-connect terminals (/3) optional. On request.

A = Angle of throw

600NH/2

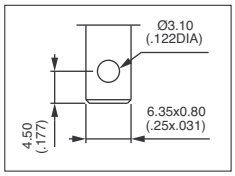

600NH

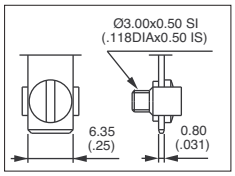

A

Single pole

Solder lug	Screw	A	III 2-1	II	I 2-3
631NH/2	**631NH**	28°	ON	-	OFF
635NH/2	**635NH**	24°	MOM	-	ON
636NH/2	**636NH**	28°	ON	-	ON
637NH/2	**637NH**	33°	MOM	OFF	MOM
638NH/2	**638NH**	33°	ON	OFF	MOM
639NH/2	**639NH**	33°	ON	OFF	ON

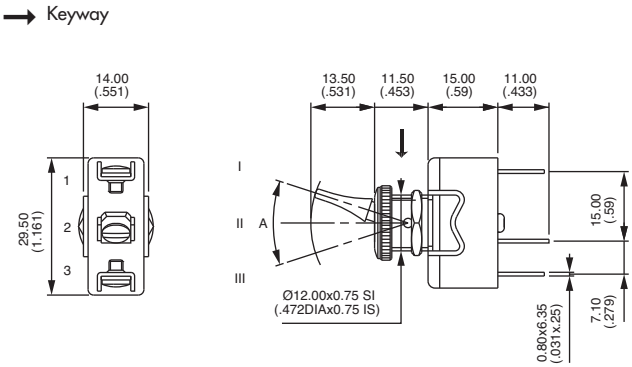

Double pole

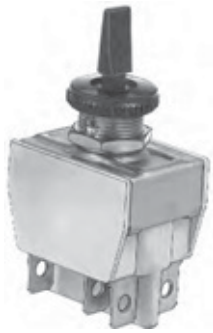

Solder lug	Screw	A	III 2-1 5-4	II	I 2-3 5-6
641NH/2	**641NH**	26°	ON	-	OFF
644NH/2	**644NH**	30°	ON	ON	ON
644NH/2-1R	**644NH-1R***	26°	ON	ON	MOM
644NH/2-2R	**644NH-2R***	26°	MOM	ON	MOM
645NH/2	**645NH**	26°	MOM	-	ON
646NH/2	**646NH**	26°	ON	-	ON
647NH/2	**647NH**	26°	MOM	OFF	MOM
648NH/2	**648NH**	30°	ON	OFF	MOM
649NH/2	**649NH**	30°	ON	OFF	ON

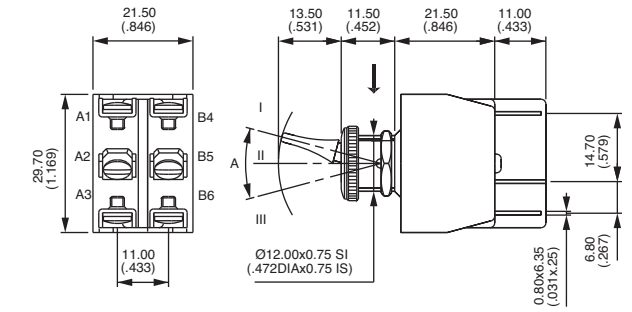

* Function 4 : SP in DP case - see end of catalogue.

Three pole

Solder lug	Screw	A	III 2-1 5-4 8-7	II	I 2-3 5-6 8-9
651NH/2	**651NH**	24°	ON	-	OFF
655NH/2	**655NH**	15°	MOM	-	ON
656NH/2	**656NH**	24°	ON	-	ON
657NH/2	**657NH**	24°	MOM	OFF	MOM
658NH/2	**658NH**	24°	ON	OFF	MOM
659NH/2	**659NH**	28°	ON	OFF	ON

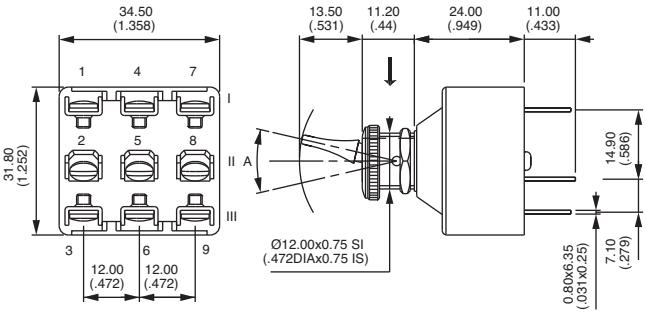

660 series

Power toggle switches - metal lever

Specifications

A

ELECTRICAL SPECIFICATIONS

- Max. current/voltage rating with resistive load : 10A 30VDC
- Decrease by 50 % for inductive load
- Initial contact resistance : 10 mΩ max.
- Insulation resistance : 1.000 MΩ min. at 500VDC
- Dielectric strength :
  2.500 Vrms 50 Hz min. between terminals
  2.500 Vrms 50 Hz min. between terminals and frame
- Electrical life : 10.000 cycles at full load

MATERIALS

- Case : melamine/polyester
- Actuator : brass, nickel plated
- Bushing : brass, nickel plated
- Contacts : silver

GENERAL SPECIFICATIONS

- Torque : 1,50 Nm (1.10 Ft.lb) max. applied to nut
- Panel thickness : 4,5 mm (.177) max.
- Operating temperature : -20°C to +55°C

PANEL CUT-OUT

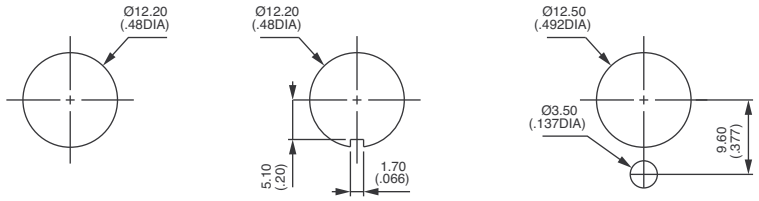

ABOUT THIS SERIES

Dimensions : first dimensions are in mm while inches are shown as bracketed numbers.

Sealing boots are available to protect the switches against dust and water. They are presented in section H.

Mounting accessories : standard hardware supplied with all models : 1 hex nut U166, 1 knurled nut U411 and 1 lockwasher U13
Standard and special hardware are presented in section I.

Packaging unit : 25 pieces per type.

The company reserves the right to change specifications without notice.

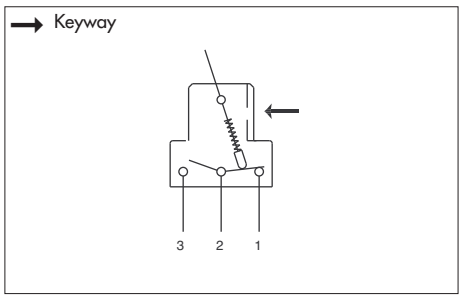

- 2 and 3 maintained or momentary positions
- Screw terminals

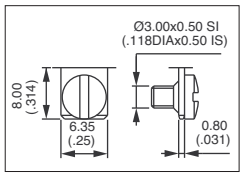

A

MODEL STRUCTURE

Four pole

	Angle of throw (A)	III 2-1*	II	I 2-3**
661	20°	ON	-	OFF
665	20°	MOM	-	ON
666	20°	ON	-	ON
667	20°	MOM	OFF	MOM
668	20°	ON	OFF	MOM
669	30°	ON	OFF	ON

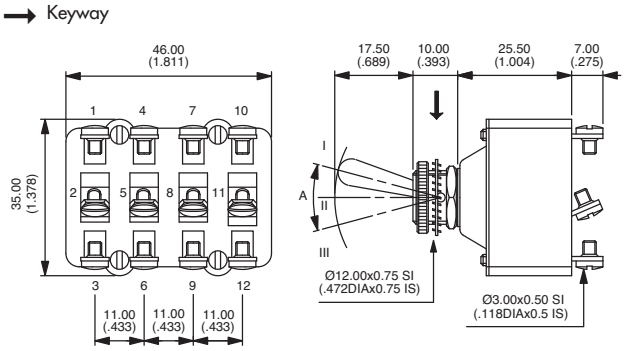

* (2-1) (5-4) (8-7) (11-10) ** (2-3) (5-6) (8-9) (11-12)

TERMINAL OPTIONS

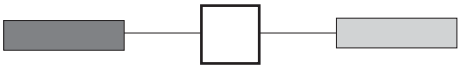

/2 Solder lug terminals

/3 Quick-connect terminals 6,35 x 0,8 (.250 x .031)

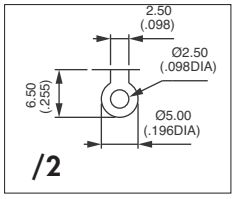

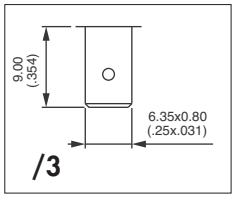

OTHER OPTIONS

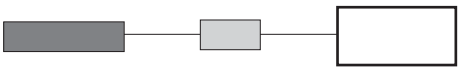

T Tropicalized diallylphthalate case (-40°C to +85°C)

LUXE Chrome plated lever and cap nut U117

TK LUXE Front panel sealing by O-ring and sealing washer + options T and LUXE.
See 600H series.

G Black finish on bushing, lever and nuts. Includes tropicalization (option T)

GK Front panel sealing by O-ring and sealing washer (as described in option TK LUXE)
+ option G

3500 series

High performance toggle switches - environmentally sealed

Distinctive features and specifications

A

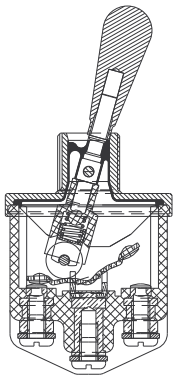

- **Completely sealed switches withstanding 0,1 bar pressure**
  - Frontal sealing to IP67 or IP69K by a silicone membrane (for sealed panel mounting, add washer U60, section I).
  - Rear sealing to IP 64 provided by moulded-in terminal inserts
- **Approved to European standards CECC 96000**
- **Three types of terminals**
- **Many lever styles available**

ELECTRICAL SPECIFICATIONS

- Max. current/voltage rating with resistive load and electrical life at full load: see table below
- Initial contact resistance : 10 mΩ max. at 1A 2VDC
- Insulation resistance : 1.000 MΩ
- Dielectric strength : 2.500 Vrms 50 Hz min. between terminals
  3.000 Vrms 50 Hz min. between terminals and frame

FUNCTIONS	GENERAL PERFORMANCES
ON-OFF et ON-ON	10.000 cycles, T20°C 15A 28VDC resistive 15A 28VDC inductive 5A 28VDC lamp
ON OFF ON	10.000 cycles, T20°C 15A 28VDC resistive 15A 28VDC inductive 5A 28VDC lamp
AUTRES FONCTIONS	10.000 cycles, T20°C 15A 28VDC resistive 10A 28VDC inductive 3A 28VDC lamp

MATERIALS

- Case : mineral filled polyester UL94-V0
- Bushing and cover : zamac
- Actuator : brass, nickel or chrome plated, or anodized aluminium
- Contacts : silver alloy

AGENCY APPROVAL

CECC 96201-004

Availability : consult factory for details of approved models.

Marking : to order switches marked CECC, complete appropriate box of ordering format.

GENERAL SPECIFICATIONS

- Mechanical life : 40.000 cycles
- Torque : 2 Nm (1.47 Ft.lb) max. applied to nut
- Panel thickness : see "Mounting Accessories" on the following pages
- Operating temperature : -40°c to +85°C
- Moisture resistance : 56 days

The company reserves the right to change specifications without notice.

MODEL STRUCTURE

35 [ ] [ ] [ ]

SERIES

Number of poles

3	Single pole
4	Double pole

Electrical functions

1-0	ON	-	OFF
2-0	ON	-	m.OFF
3-0	OFF	-	MOM
4-1	ON	[3]ON[4]	ON▲
4-2	ON	[3]ON[4]	MOM▲
4-3	MOM	[3]ON[4]	MOM▲
4-4	ON	[1]ON[6]	ON▲
4-5	ON	[1]ON[6]	MOM▲

Electrical functions (continued)

4-6	MOM	[1]ON[6]	MOM▲
5-0	ON	-	MOM
6-0	ON	-	ON
7-0	MOM	OFF	MOM
8-0	ON	OFF	MOM
9-0	ON	OFF	ON

▲ Function 4 : double pole only

Terminals

0	Screw
2	Solder lug/quick-connect
3	Normalized quick-connect
4	Screw + clamp

A

OPTIONS

[ ] [ ] [ ] [ ] [ ] [ ]

Lever styles

1	Standard, length 17,5 mm (.688) or locking, length 20 mm (.787)
2	Length 30 mm (1.181)
3	Flatted, length 24 mm (.944)
4	Length 40 mm (1,574)
5	Length 50 mm (1.968)
6	Locking, length 25,4 mm (1.000)

Lever locking styles

0	No locking
A	Locked in 3 positions
D	Locked out of center position
G	Locked in keyway side

See drawings on the following pages.

Accessories

0	2 hex nuts, 1 locking ring and 1 lockwasher
2	2 hex nuts and 1 sealing washer

Lever finish

N	Bright nickel
B	Satin chrome
G*	Black
F*	Black with fluorescent tip (lever type 1 only)
C	Painted or anodized

* Black finish on bushing too.

Agency approval

0	None
1	CECC

Locking lever special finish

(blank)	None
P5	Painted yellow
A6	Anodized red

Order with lever finish type C.
Other colours : on request.

NOTICE : please note that not all combinations of above numbers are available.
Refer to the following pages for further information.

ABOUT THIS SERIES
On the following pages, you will find successively :
- model structure of switches
- their options in the same order as in above chart

Dimensions : first dimensions are in mm while inches are shown as bracketed numbers.

Security caps are available to prevent inadvertent lever operation. They are presented in section I.

Packaging unit : 25 pieces

3500 series

High performance toggle switches - environmentally sealed

MODEL STRUCTURE

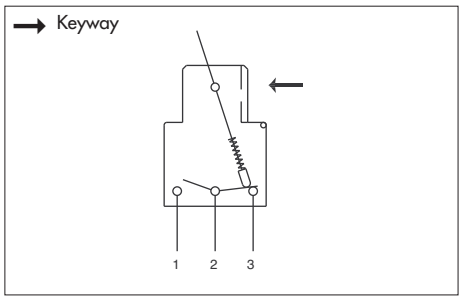

- Screw, solder lug or quick-connect terminals
- Also available with threaded terminals : consult factory
- Screw terminals + clamp : on request.

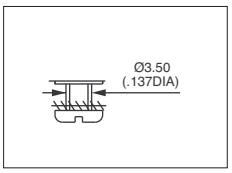

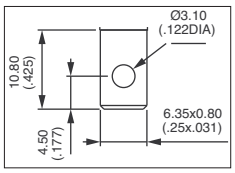

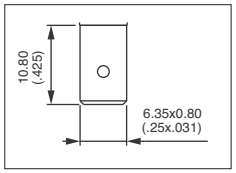

MODEL STRUCTURE

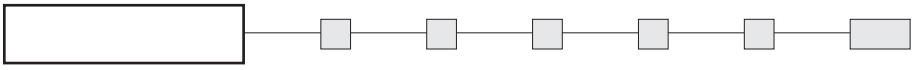

Shown with standard lever

FUNCTIONS			BASIC PART NUMBER					
III A2-A3 B5-B6	II * A3-B5 ** A1-B5	I A1-A2 B5-B4	Screw terminals		Solder lugs and quick-connect term.		Normalized quick-connect terminals	
			Single pole	Double pole	Single pole	Double pole	Single pole	Double pole
ON	-	OFF	3531-00	3541-00	3531-02	3541-02	3531-03	3541-03
ON	-	m.OFF	3532-00	3542-00	3532-02	3542-02	3532-03	3542-03
OFF	-	MOM	3533-00	3543-00	3533-02	3543-02	3533-03	3543-03
ON	ON *	ON		3544-10		3544-12		3544-13
ON	ON *	MOM		3544-20		3544-22		3544-23
MOM	ON *	MOM		3544-30		3544-32		3544-33
ON	ON **	ON		3544-40		3544-42		3544-43
ON	ON **	MOM		3544-50		3544-52		3544-53
MOM	ON **	MOM		3544-60		3544-62		3544-63
ON	-	MOM	3535-00	3545-00	3535-02	3545-02	3535-03	3545-03
ON	-	ON	3536-00	3546-00	3536-02	3546-02	3536-03	3546-03
MOM	OFF	MOM	3537-00	3547-00	3537-02	3547-02	3537-03	3547-03
ON	OFF	MOM	3538-00	3548-00	3538-02	3548-02	3538-03	3548-03
ON	OFF	ON	3539-00	3549-00	3539-02	3549-02	3539-03	3549-03

Keyway

* and ** : A2-B4 and A2-B6 = jumper to be wired by the user.

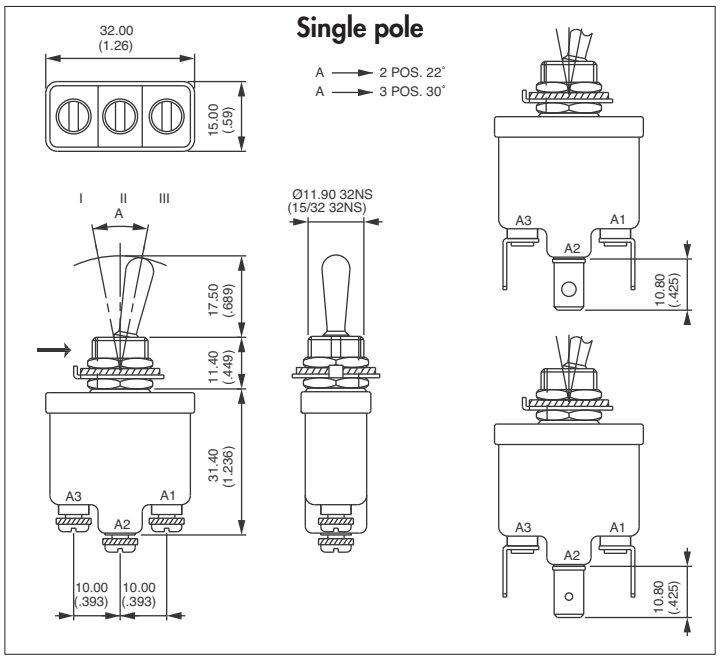

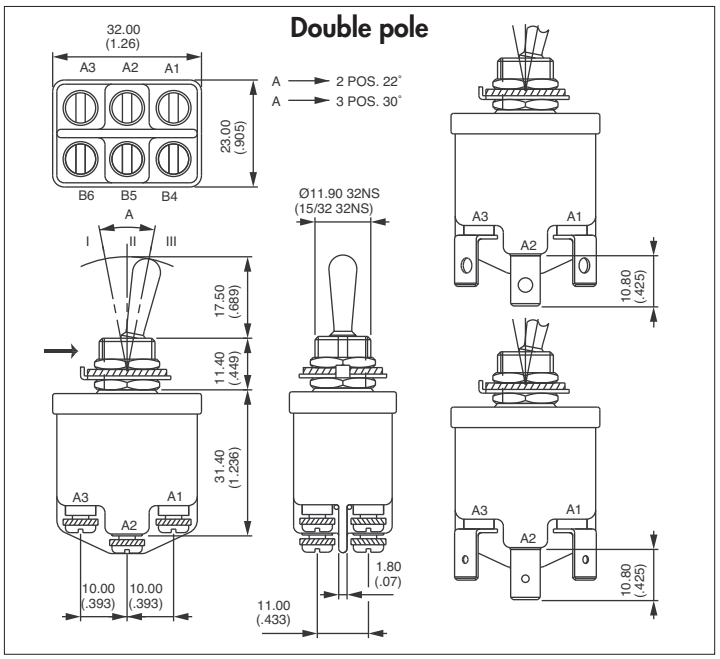

LEVER STYLES

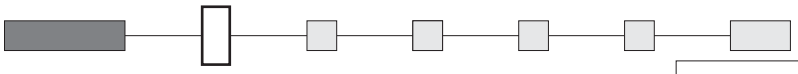

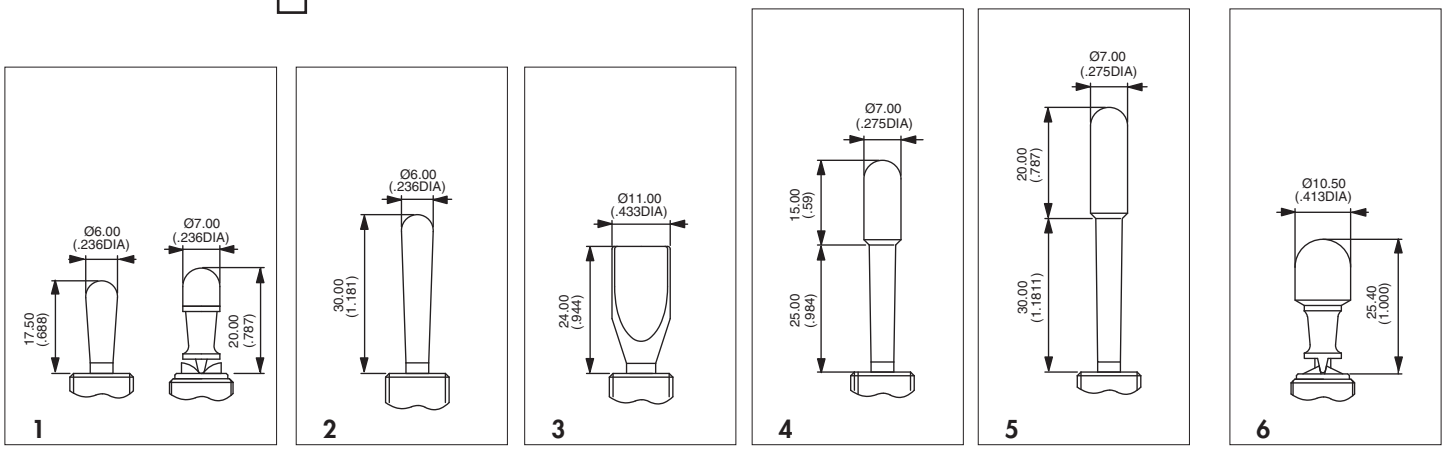

Standard

LEVER FINISH

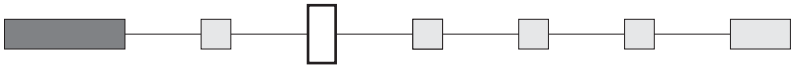

N	Bright nickel
B	Satin chrome
G*	Black
F*	Black with fluorescent tip (available with lever type 1 only)
C	Painted or anodized (for locking lever only)

* Black finish on bushing too.

LOCKING LEVER STYLES

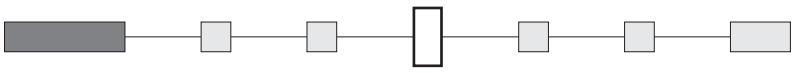

0 No locking

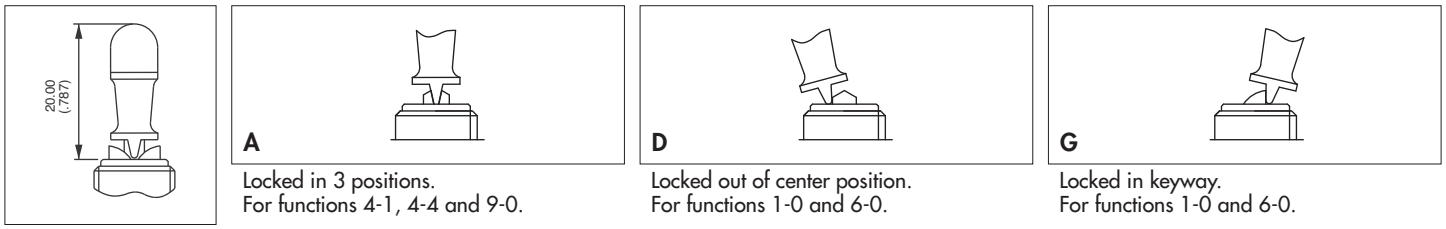

A Locked in 3 positions.
For functions 4-1, 4-4 and 9-0.

D Locked out of center position.
For functions 1-0 and 6-0.

G Locked in keyway.
For functions 1-0 and 6-0.

AGENCY APPROVAL

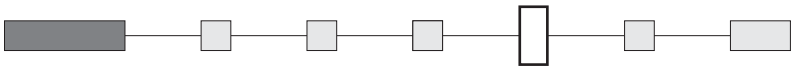

0	None
1	CECC

MOUNTING ACCESSORIES

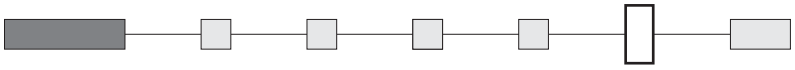

0 For NON-SEALED mounting (panel cut-out fig. 1, 2 or 3)
2 hex nuts 14 mm (.551) across flats, 1 locking ring U121 or U12, 1 lockwasher U13
Panel thickness : 5 mm (.196) max.

2 For SEALED mounting (panel cut-out fig. 2)
2 hex nuts 14 mm (.551) across flats and 1 sealing washer U60
Panel thickness : 4 mm (.157) max.

Special hardware : black cap nut U129. Order separately. See section I.

PANEL CUT-OUT

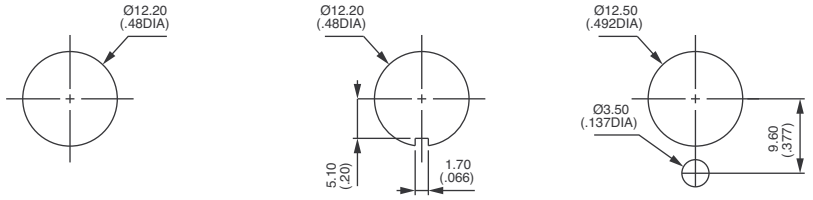

Figure 1 Figure 2 Figure 3

LOCKING LEVER SPECIAL FINISH

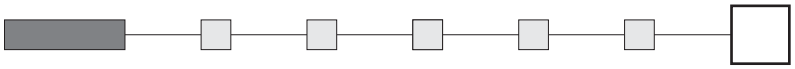

(blank)	None
P5	Painted yellow
A6	Anodized red

Order with lever finish type C.
Other colours on request.

3600NF series

Sealed toggle switches for outdoor applications

Distinctive features and specifications

- **Sealing to IP67 obtained by :**
  - O-ring between lever and bushing
  - half-length boot and nylon washer (supplied mounted)
  - elastomer gasket between cover and case
  - molded-in terminal inserts
  - sealing washer U60
- **Solid silver contacts**
- **UL approved**

A

ELECTRICAL SPECIFICATIONS

- Max. current/voltage rating with resistive load : 12A 28VDC
- Initial contact resistance : 10 mΩ max.
- Insulation resistance : 1.000 MΩ min. at 500VDC
- Dielectric strength :
  2.500 Vrms 50 Hz min. between terminals
  3.000 Vrms 50 Hz min. between terminals and frame
- Electrical life : 10.000 cycles at full load

MATERIALS

- Case : phenolic resin
- Actuator : brass, nickel plated
- Bushing : brass, nickel plated
- Contacts : solid silver

GENERAL SPECIFICATIONS

- Sealing to IP67 according to IEC 60529
- Torque : 1,50 Nm (1.10 Ft.lb) max. applied to nut
- Panel thickness : 2 mm (.079) max. with all accessories
- Operating temperature : -40°C to +85°C

AGENCY APPROVAL

6A 125VAC/250VAC

Availability : consult factory for details or approved models.

Marking : to order switches marked UL, complete last box of ordering format.

ABOUT THIS SERIES

Dimensions : first dimensions are in mm while inches are shown as bracketed numbers.

Mounting accessories : 1 sealing boot U1151, 1 hex nut U166, 1 nylon washer U21 and 1 sealing washer U60. See section I.

Packaging unit : 25 pieces per type and colour.

The company reserves the right to change specifications without notice.

3600NF series

Sealed toggle switches for outdoor applications

Screw terminals - solder lug/quick-connect terminals

MODEL STRUCTURE

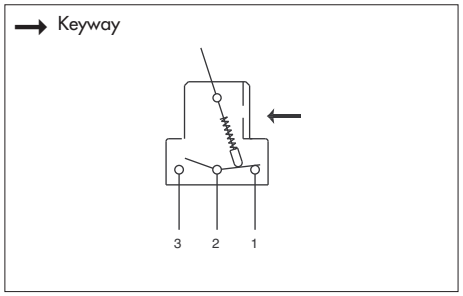

- 1 and 2 pole configurations

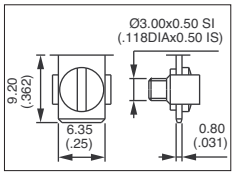

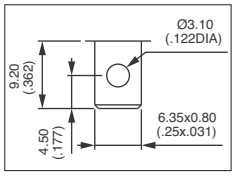

A

MODEL STRUCTURE

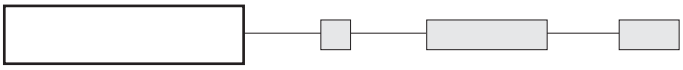

Screw terminals - single pole

	III	II	I
	2-1		2-3
3631NF	ON	-	OFF
3635NF	MOM	-	ON
3636NF	ON	-	ON
3637NF	MOM	OFF	MOM
3638NF	ON	OFF	MOM
3639NF	ON	OFF	ON

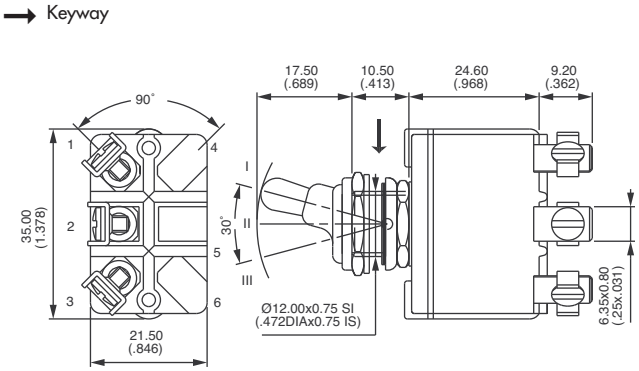

Screw terminals - double pole

	III	II	I
	2-1		2-3
	5-4		5-6
3641NF	ON	-	OFF
3644NF*	ON	ON	ON
3645NF	MOM	-	ON
3646NF	ON	-	ON
3647NF	MOM	OFF	MOM
3648NF	ON	OFF	MOM
3649NF	ON	OFF	ON

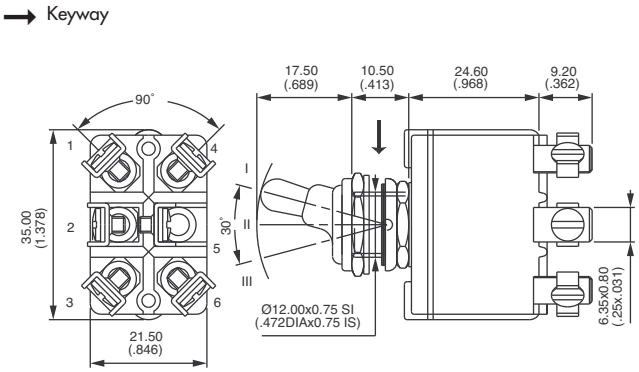

* Function 4 : SP in DP case, see end of catalogue.

Solder lug/quick-connect terminals - single pole

	III	II	I
	2-1		2-3
3631NF/2	ON	-	OFF
3635NF/2	MOM	-	ON
3636NF/2	ON	-	ON
3637NF/2	MOM	OFF	MOM
3638NF/2	ON	OFF	MOM
3639NF/2	ON	OFF	ON

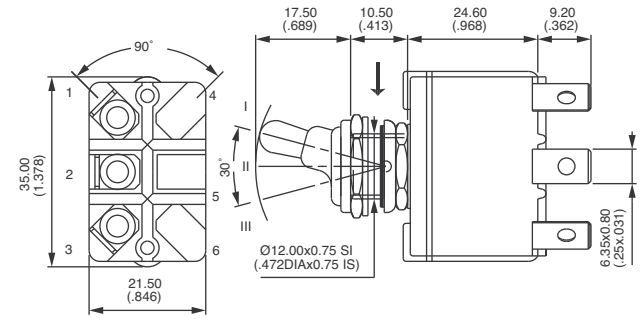

Solder lug and quick-connect terminals - double pole

	III 2-1 5-4	II	I 2-3 5-6
3641NF/2	ON	-	OFF
3644NF/2*	ON	ON	ON
3645NF/2	MOM	-	ON
3646NF/2	ON	-	ON
3647NF/2	MOM	OFF	MOM
3648NF/2	ON	OFF	MOM
3649NF/2	ON	OFF	ON

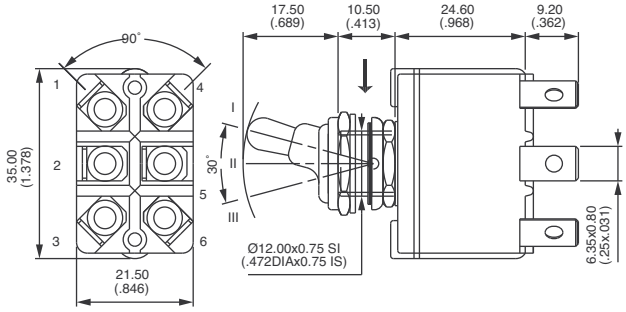

* Function 4 : DP in 4P case, see end of catalogue.

PANEL CUT-OUT

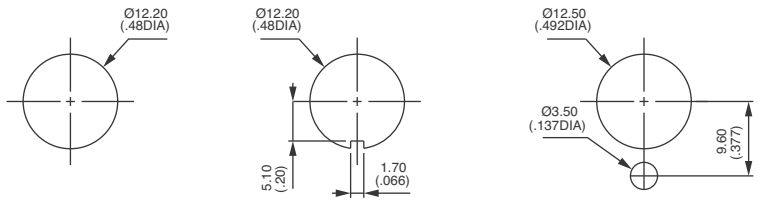

FINISH

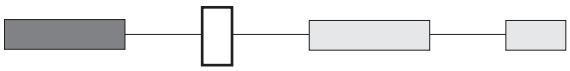

G Black finish on lever and nut of sealing boot

SPECIAL LEVER

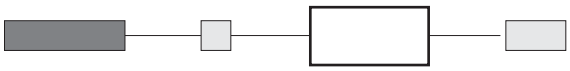

X1052 30 mm (1.181) long lever

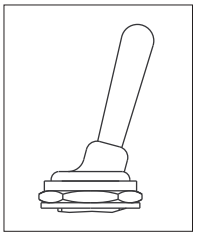

AGENCY APPROVAL

UL

Marking : to order switches marked UL, complete above box with "UL".

6000 series

Toggle switches for military applications

Distinctive features and specifications

A

- ❑ **Suitable for military or industrial applications**
- ❑ **Sealing and locking lever options available**
- ❑ **Matt black finish on actuator and bushing**

ELECTRICAL SPECIFICATIONS

- Max. current/voltage rating : see table below
- Initial contact resistance : 10 mΩ max.
- Insulation resistance : 1.000 MΩ min. at 500VDC
- Dielectric strength :
  2.000 Vrms 50 Hz min. between terminals
  3.000 Vrms 50 Hz min. between terminals and frame
- Electrical life : 10.000 cycles at full load

CURRENT/VOLTAGE RATING	
	30VDC
Resistive load	6,5A
Inductive load	5A
Lamp load	3A

MATERIALS

- Case : diallylphthalate (DAP)
- Actuator : brass, chrome plated, black
- Bushing : brass, chrome plated, black
- Contacts : **A** : silver

GENERAL SPECIFICATIONS

- Torque : 1,50 Nm (1.10 Ft.lb) max. applied to nut
- Panel thickness : 5 mm (.196) max.
- Operating temperature : -40°C to +85°C

ABOUT THIS SERIES

Dimensions : first dimensions are in mm while inches are shown as bracketed numbers.

Security caps are available to prevent inadvertent lever operation. They are presented in section I.

Sealing boots are available to protect the switches against dust and water. They are presented in section H.

Mounting accessories : standard hardware supplied with all models : 2 matt black nuts U41, matt black locking ring U12, zinc plated lockwasher U13
They are presented in section I.

Packaging unit : 25 pieces, except model 6421 (20 pieces)

The company reserves the right to change specifications without notice.

6000 series

Toggle switches for military applications

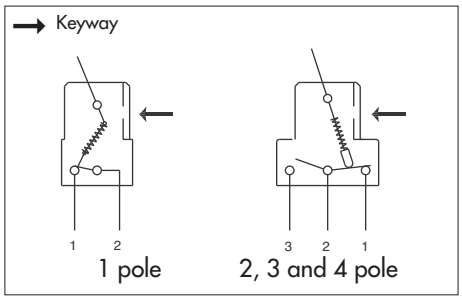

- Screw terminals standard
- Solder lug or quick-connect terminals optional
- 1, 2, 3 and 4-pole configurations

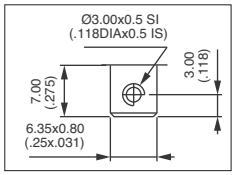

A

MODEL STRUCTURE

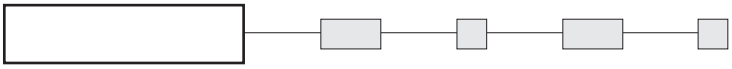

Single pole

Keyway

	I		II
6421A-03	ON	-	OFF

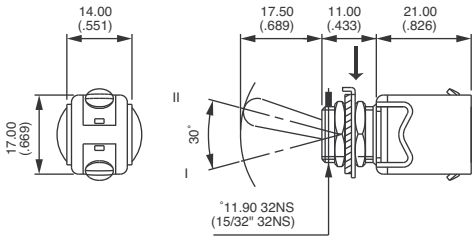

Double pole

Keyway

	III 2-1 5-4	II	I 2-3 5-6
6641-03	ON	-	OFF
6642-03	ON	-	mom.OFF
6643-03	MOM	-	OFF
6644-03 ▲	ON	ON	ON
6645-03	MOM	-	ON
6646-03	ON	-	ON
6647-03	MOM	OFF	MOM
6648-03	ON	OFF	MOM
6649-03	ON	OFF	ON

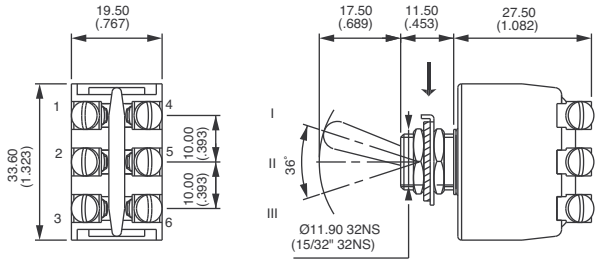

▲ Function 4 : SP in DP case, see end of catalogue.

Three pole

Keyway

	III*	II	I**
6651-03	ON	-	OFF
6652-03	ON	-	mom.OFF
6653-03	MOM	-	OFF
6655-03	MOM	-	ON
6656-03	ON	-	ON
6657-03	MOM	OFF	MOM
6658-03	ON	OFF	MOM
6659-03	ON	OFF	ON

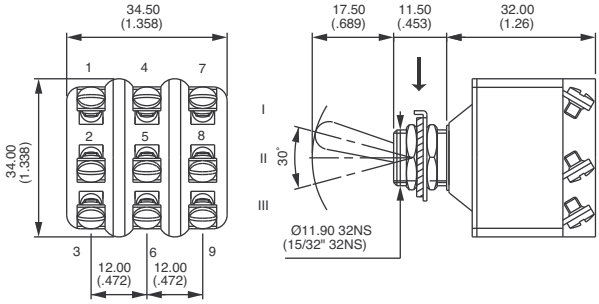

* (2-1) (5-4) (8-7) ** (2-3) (5-6) (8-9)

6000 series

Toggle switches for military applications

OPTIONS

A

Four pole

	III*	II	I**
6661-03	ON	-	OFF
6662-03	ON	-	mom.OFF
6663-03	MOM	-	OFF
6664-03 ▲	ON	ON	ON
6665-03	MOM	-	ON
6666-03	ON	-	ON
6667-03	MOM	OFF	MOM
6668-03	ON	OFF	MOM
6669-03	ON	OFF	ON

→ Keyway

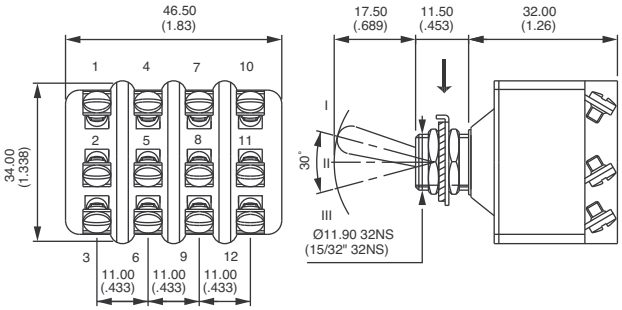

* (2-1) (5-4) (8-7) (11-10) ** (2-3) (5-6) (8-9) (11-12) ▲ Function 4 : 2P in 4P case, see end of catalogue.

STANDARD PANEL CUT-OUT

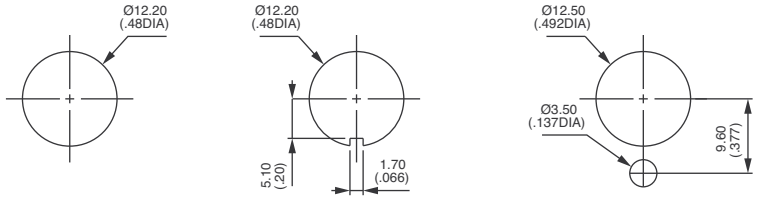

PANEL CUT-OUT WITH "K" SEALING

Recommended cut-out and mounting depending on panel thickness

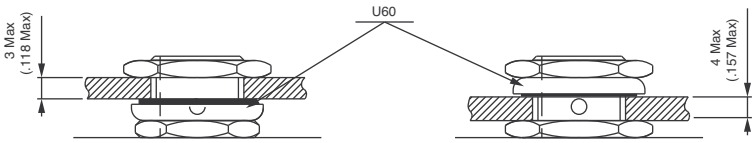

FINISH

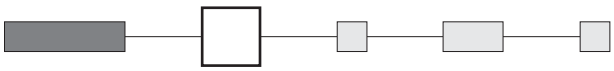

B	Lever and bushing with grey satin chrome finish
LM	Nickel plated bushing - lever and upper nut bright chrome plated
8	Black lever with fluorescent tip

SEALING

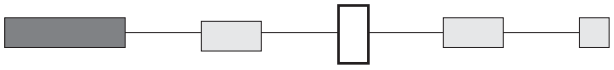

K Frontal sealing by O-ring and sealing washer.
Protects the switch against water and dust.
Panel seal withstands 1 bar pressure and remains sealed even when switch is operated

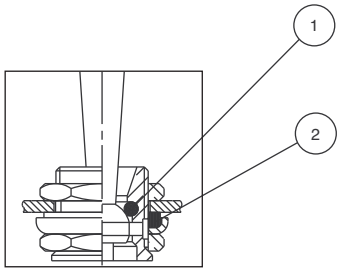

① O-ring ② Sealing washer

LOCKING LEVERS

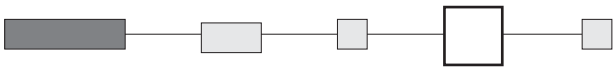

→ Keyway

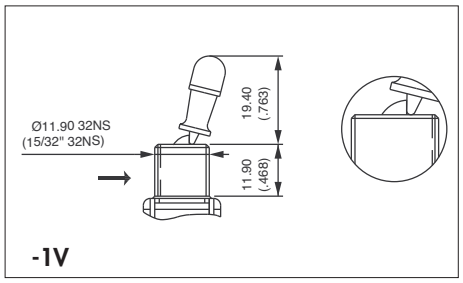

1 locked position

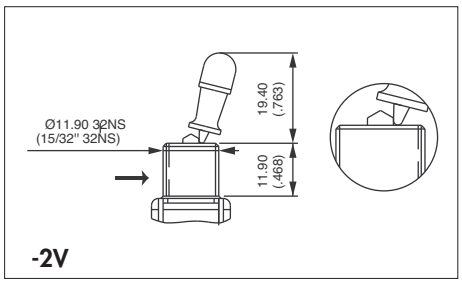

2 locked positions

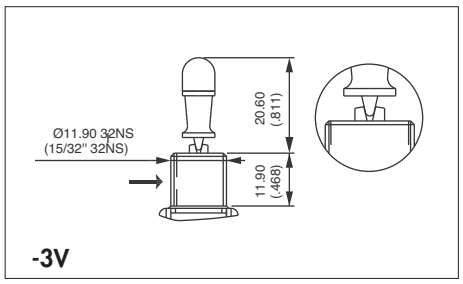

3 locked positions

TERMINALS

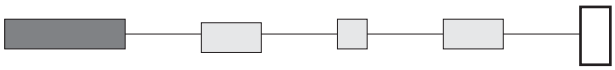

Not available on single pole models.

Blank Screw terminals

/2 Solder lug terminals

/3 Quick-connect terminals 6,35 x 0,8 (.250 x .031)

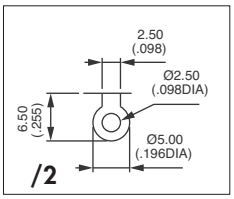

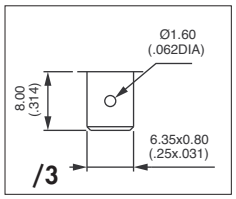

NEOPRENE PROTECTION CAPS

These caps are designed to insulate terminals against electrical short circuit.

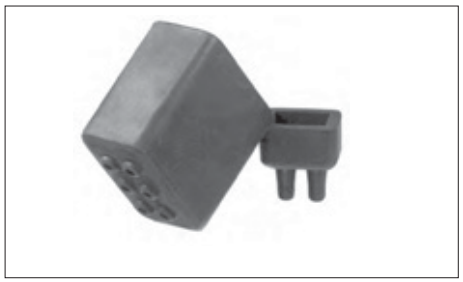

For 1-pole models	For 2-pole models	For 3-pole models	For 4-pole models
U58	**U120**	**U46**	**U47**

To be ordered separately. Example : PROTECTION CAP U58

«I» range pushbuttons

Section B1

IC series

Pushbutton switches for harsh environments - short case - bushing Ø 12 mm - momentary

Distinctive features and specifications

- ❑ **Momentary with short case, reduced behind-panel depth**
- ❑ **Tactile feedback**
- ❑ **Flat round actuator for optional marking**
- ❑ **Glossy actuator option (round curved only)**
- ❑ **Sealed to IP67**

B1

ENVIRONMENTAL SPECIFICATIONS

- Front panel sealing : IP67 according to IEC 60529
- Shock resistance : 100 g according to IEC 512-4, test 6c
- Vibration resistance : 10-500Hz - 10 g according to IEC 512-4, test 6d
- Salt spray : IEC 512-6, test 11f
- Robustness : IK06 according to EN 50102 (1 joule)
- Operating temperature : -40°C to +85°C

ELECTRICAL SPECIFICATIONS

- Max. current/voltage rating with resistive load :
  5A 28VDC, 70.000 cycles
  0,2A 48VDC, 500.000 cycles
  0,5A 48VAC, 500.000 cycles
- Initial contact resistance : 50 mΩ max.
- Insulation resistance : 1 GΩ min. at 500VDC
- Dielectric strength : 1.500 Vrms 50 HZ between terminals

GENERAL SPECIFICATIONS

- Panel thickness : 1,5 mm (.059) min. 4 mm (.157 max.)
- Total travel : 1,7 mm (.067)+/- 0,3 mm
- Typical operating force : 4N +/- 2N
- Low level or mechanical life : 1.000.000 cycles
- Torque : 1,5 Nm max. applied to nut
- Soldering : 320°C max. for 3 sec.

MATERIALS

- Case : thermoplastic UL94-V0
- Actuator : polyamide 6/6
- Bushing/bezel : zinc die-cast (zamac), black painted
- Contacts : silver, gold plated
- Multi-wire lead AWG20, section 0,6 mm²
- Terminal seal : epoxy

MOUNTING

Panel cut-out

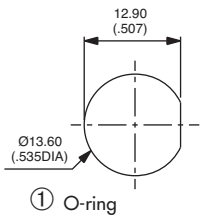

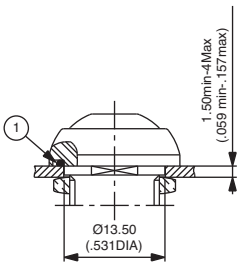

Matrix mounting

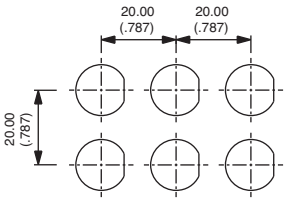

Back of panel space requirement

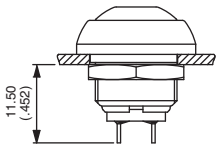

The company reserves the right to change specifications without notice.

MODEL STRUCTURE

IC

SERIES

Actuator shape

C	Square
R	Round, curved
P	Round, flat
B	Round curved with gloss finish

Electrical function

3	Normally open (NO)

Terminals

S	Solder lugs
F	Flying leads
P	Straight PC
Z1	Quick-connect

Contacts

AD	Silver, gold plated

OPTIONS

Actuator colour

1	Blue
2	Black
3	Green
4	Grey
5	Yellow
6	Red
7/1	White
8	Bright chrome
9	Orange
A	Satin chrome
B	Dark blue

Options

100	Satin chrome bezel
101	Bright chrome bezel
104	High actuator (round models only, except with gloss finish)

ABOUT THIS SERIES
On the following pages, you will find successively :
model structure of switches and options in the same order as in above chart

Dimensions : first dimensions are in mm while inches are shown as bracketed numbers.

NOTICE : please note that not all combinations of above numbers are available.
Refer to the following pages for further information.

A sealing boot is available to protect the switches against frost and sand (P/N U5125). It is presented after the IA series and in Section H.

Mounting accessories : Standard hardware supplied : 1 hex nut 14 mm (.551) across flats and 1 O-ring.
Hex nut part number U166.

Packaging unit : 25 pieces

IC series

Pushbutton switches for harsh environments - short case - bushing Ø 12 mm - momentary

Square - non-illuminated

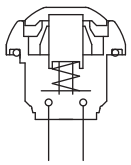

Function 3 (NO)

Straight **P**

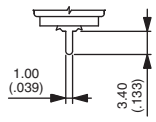

Quick-connect **Z1**

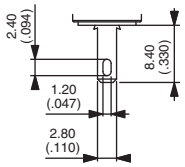

MODEL STRUCTURE

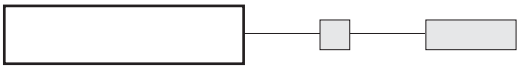

B1

Solder lug terminals

ICC3SAD Normally Open

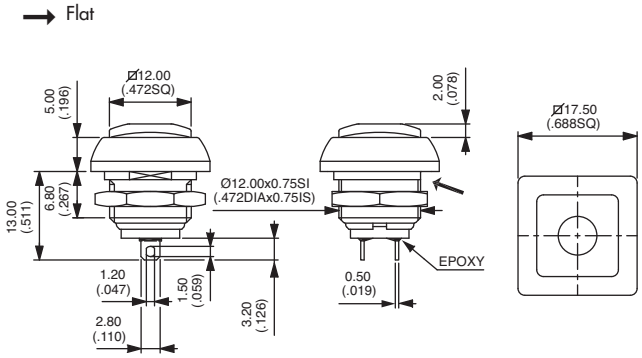

Also available with straight PC terminals : **ICC3PAD**
and quick-connect terminals : **ICC3Z1AD**

Sealed flying lead terminals

ICC3FAD Normally Open

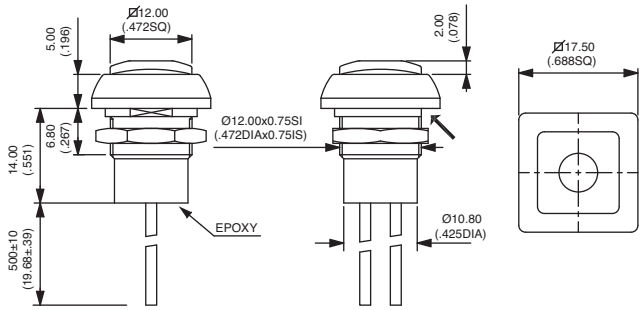

ACTUATOR COLOUR

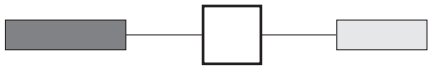

1 : blue - **2** : black - **3** : green - **4** : grey - **5** : yellow - **6** : red - **7/1** : white - **8** : bright chrome - **9** : orange
A : satin chrome - **B** : dark blue

OPTIONS

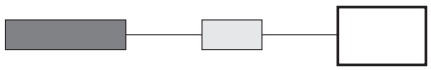

100 : Satin chrome bezel
101 : Bright chrome bezel

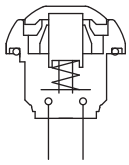

Function 3 (NO)

• **Gloss actuator finish**
Curved actuator also available with gloss finish - replace ICR by **ICB** in the part numbers below.
Not available with option 104 (high actuator).

Straight **P**

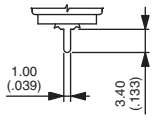

Quick-connect **Z1**

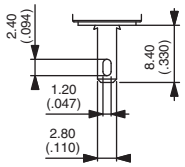

MODEL STRUCTURE

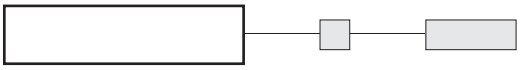

Actuator marking available on ICP models (symbol 10 mm max.). On request.

B1

Solder lug terminals

Curved actuator **ICR3SAD** — Normally open

Flat actuator **ICP3SAD** — Normally open

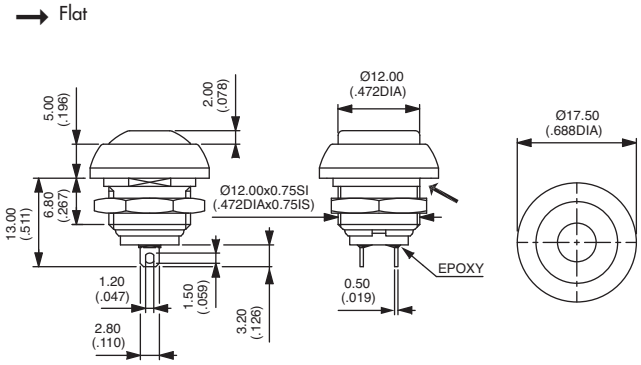

Also available with straight PC terminals : **IC•3PAD**
and quick-connect terminals : **IC•3Z1AD**

Sealed flying lead terminals

Curved actuator **ICR3FAD** — Normally open

Flat actuator **ICP3FAD** — Normally open

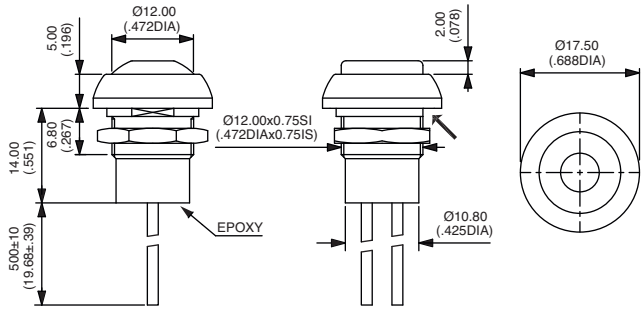

ACTUATOR COLOUR

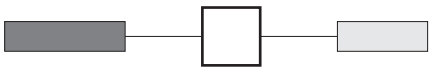

1 : blue - **2** : black - **3** : green - **4** : grey - **5** : yellow
6 : red - **7/1** : white - **8** : bright chrome - **9** : orange
A : satin chrome - **B** : dark blue

OPTIONS

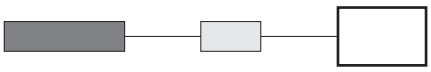

100 : Satin chrome bezel
101 : Bright chrome bezel
104 : High actuator (round models, except w. gloss finish)

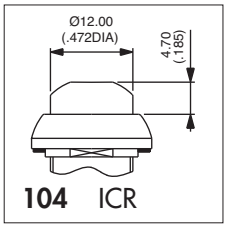

104 ICR

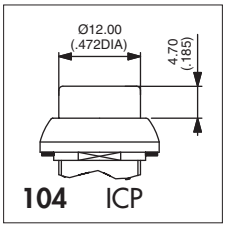

104 ICP

IL series

Sealed pushbutton switches for thick panels - long bushing Ø 12 mm - momentary

Distinctive features and specifications

- ❑ **Momentary pushbuttons for thick panels**
- ❑ **Illuminated or non-illuminated**
- ❑ **Tactile feedback**
- ❑ **Flat round actuator for optional marking**
- ❑ **Sealed to IP67 (standard models only)**

B1

ENVIRONMENTAL SPECIFICATIONS

- Front panel sealing according to IEC 60529 : IP67 (standard models) IP54 (options X1242 and 234)
- Shock resistance : 100 g according to IEC 512-4, test 6c
- Vibration resistance : 10-500 Hz - 10 g according to IEC 512-4, test 6d
- Salt spray : IEC 512-6, test 11f
- Operating temperature : -40°C to +85°C

ELECTRICAL SPECIFICATIONS

- Max. current/voltage rating with resistive load : 2A 24VDC, 200.000 cycles
- Initial contact resistance : 50 mΩ max.
- Insulation resistance : 1 GΩ min. at 500VDC
- Dielectric strength : 1.000 Vrms

LED COMPONENT SPECIFICATIONS			
LED colour	Forward current	Typ. forward voltage	Max. forward voltage
Super red (L0S)	20mA	2,1V	2,3V
Yellow (L0Y)	20mA	2,1V	2,3V
Green (L0G)	20mA	2,1V	2,3V
Blue (L0B)	20mA	3,2V	3,8V
White (L0W)	20mA	3,35V	4,25V

A resistor must be series-connected by the user.

$$\text{Resistor value} = \frac{\text{supply voltage - LED forward voltage}}{\text{LED forward current}}$$

GENERAL SPECIFICATIONS

- Panel thickness : 1,50 mm (.059) min. 10 mm (.393) max.
- Total travel : 1,7 mm (.067) +/- 0,3 mm
- Typical operating force : 4N +/- 2N
- Low level or mechanical life : 1.000.000 cycles
- Torque : 1 Nm max. applied to nut
- Soldering : 300°C max. for 3 seconds

MATERIALS

- Case : thermoplastic UL94-V0
- Actuator : polyamide 6/6
- Bushing/bezel : polyamide 6/6
- Contacts : silver, gold plated
- Terminal seal : epoxy

MOUNTING - STANDARD BEZEL

Panel cut-out

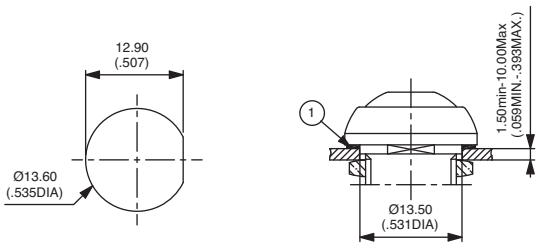

① Flat seal

Matrix mounting

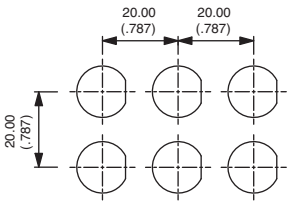

Back of panel space requirement

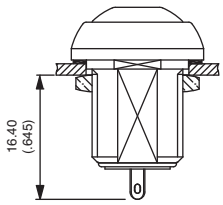

Mounting for reduced bezel : see options X1242 and 234 at the end of the series.

The company reserves the right to change specifications without notice.

IL series

Sealed pushbutton switches for thick panels - long bushing Ø 12 mm - momentary

Overview

MODEL STRUCTURE

IL				
SERIES	Actuator shape	Electrical function	Terminals	Contacts

Actuator shape

R	Round, curved
P	Round, flat

Electrical function

3	Normally open (NO)

Terminals

F	Flying leads
P	Straight PC
S	Solder lugs

Contacts

AD	Silver, gold plated

OPTIONS

Actuator colour

1	Blue
2	Black
3	Green
4	Grey
5	Yellow
6	Red
7/1	White
8	Bright chrome
9	Orange
A	Satin chrome
B	Dark blue

LED colour

Blank	Non-illum.
L0S	Super red
L0Y	Yellow
L0G	Green
L0B	Blue
L0W	White

Options

X1242	Reduced bezel, frontal mounting
234	Reduced bezel, standard mounting

Compact custom switches: see end of the series.

ABOUT THIS SERIES
On the following pages, you will find successively :
- model structure of switches and options in the same order as in above chart

Dimensions : first dimensions are in mm while inches are shown as bracketed numbers.

NOTICE : please note that not all combinations of above numbers are available.
Refer to the following pages for further information.

A sealing boot is available to protect the switches against frost and sand (P/N U5125).
It is presented after the IA series and in section H.

Mounting accessories : Standard hardware supplied : 1 flat seal (standard bezel) or 1 O-ring (reduced bezel) and 1 hex nut 14 mm (.551) across flats. Hex nut part number U166.

Packaging unit : 25 pieces

IL series

Sealed pushbutton switches for thick panels - long bushing Ø 12 mm - momentary

Illuminated

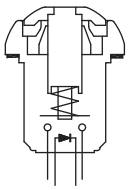

Function 3 (NO)

- Curved or flat actuator
- Antirotation bushing

Straight **P**

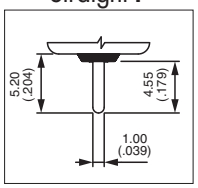

MODEL STRUCTURE

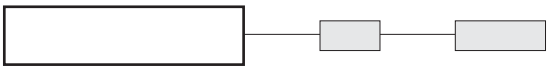

Actuator marking available on ILP models (symbol 10 mm max.). On request.

Solder lug terminals

Curved actuator
ILR3SAD Normally open

Flat actuator
ILP3SAD Normally open

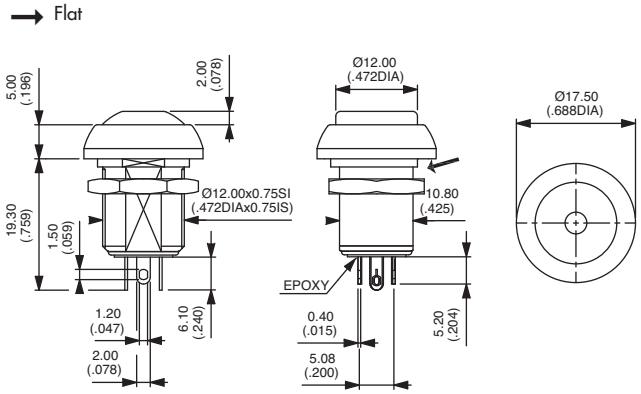

Also available with straight PC terminals : **IL•3PAD**

Flying lead terminals

Curved actuator
ILR3FAD Normally open

Flat actuator
ILP3FAD Normally open

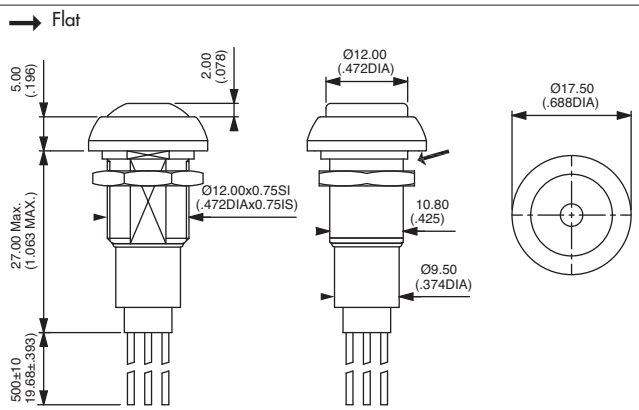

ACTUATOR COLOUR

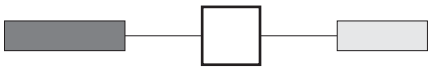

1 : blue - **2** : black - **3** : green - **4** : grey - **5** : yellow - **6** : red - **7/1** : white - **8** : bright chrome - **9** : orange
A : satin chrome - **B** : dark blue

LED COLOUR

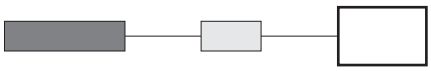

L0S : red - **L0Y** : yellow - **L0G** : green - **L0B** : blue - **L0W** : white

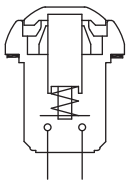

Function 3 (NO)

- Curved or flat actuator
- Antirotation bushing

Straight **P**

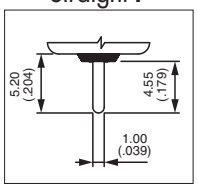

MODEL STRUCTURE

Actuator marking available on ILP models (symbol 10 mm max.). On request.

Solder lug terminals

Curved actuator
ILR3SAD Normally open

Flat actuator
ILP3SAD Normally open

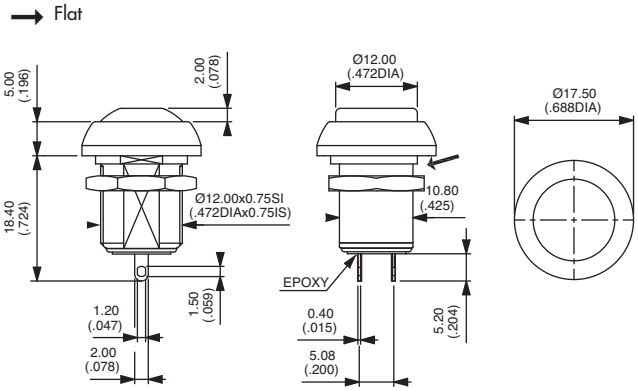

Also available with straight PC terminals : **IL•3PAD**

Flying lead terminals

Curved actuator
ILR3FAD Normally open

Flat actuator
ILP3FAD Normally open

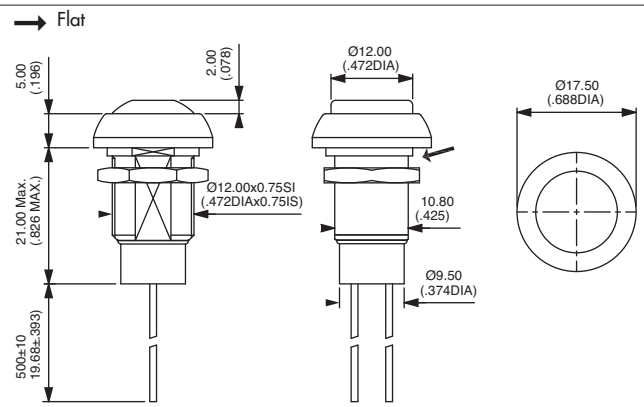

ACTUATOR COLOUR

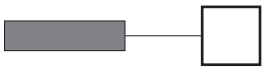

1 : blue - **2** : black - **3** : green - **4** : grey - **5** : yellow - **6** : red - **7/1** : white - **8** : bright chrome - **9** : orange
A : satin chrome - **B** : dark blue

IL series

Sealed pushbutton switches for thick panels - long bushing Ø 12 mm - momentary

Custom switches

Reduced bezel for compact matrix mounting - option X1242

ILP3FAD...X1242

- Dia. 15 (.590) reduced bezel
- **Mounting from the front into a threaded panel cut-out**
- Matrix mounting : 16 x 16 mm (.630x.630)
- Illuminated or non-illuminated
- Same terminal options and colours as standard models
- Part numbers on request.

B1

Reduced bezel for compact matrix mounting - option 234

ILP3SAD...234

- Dia. 15 (.590) reduced bezel
- **Standard panel mounting**
- Matrix mounting : 17,5 x 17,5 mm (.689x.689)
- Illuminated or non-illuminated
- Same terminal options and colours as standard models
- Part numbers on request.

MOUNTING - REDUCED MODEL

Panel cut-out

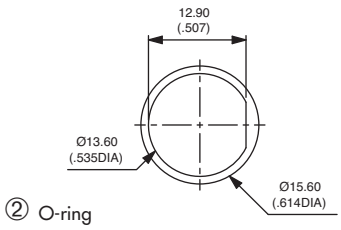

Matrix mounting

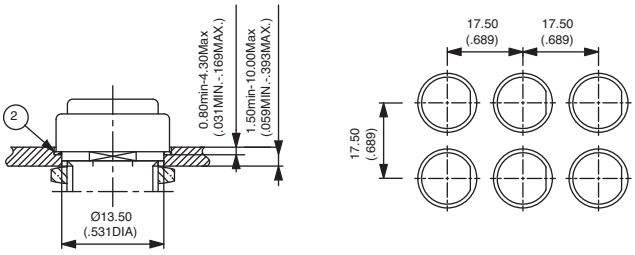

IM series

Sealed snap-action pushbutton switches - bushing Ø 12 mm - momentary

Distinctive features and specifications

- ❑ **Snap-action : tactile feedback with audible click**
- ❑ **High current/voltage rating**
- ❑ **Sealed to IP67**
- ❑ **Flat round actuator for optional marking**

B1

ENVIRONMENTAL SPECIFICATIONS

- Front panel sealing : IP67 according to IEC 60529
- Shock resistance : 50 g - 11 ms according to IEC 68-2-27
- Salt spray : IEC 512-6, test 11f
- Operating temperature : -40°C to +85°C
- Storage temperature : -40°C to +85°C

MATERIALS

- Case : polyamide 4/6
- Actuator : polyamide 6/6
- Bushing/bezel : polyamide 6/6
- Contacts : silver, gold plated
- Terminal seal : epoxy

ELECTRICAL SPECIFICATIONS

- Max. current/voltage rating with resistive load : 3A 28VDC
- Initial contact resistance : 100 mΩ max.
- Insulation resistance : 1 GΩ min. at 500VDC
- Dielectric strength : 500 Vrms between terminals
- Electrical life at full load : 25.000 cycles

AGENCY APPROVAL

2A 125VAC/250VAC
File E83438

Availability : consult factory for details of approved models.

Marking : to order switches marked UL, complete approrpiate box of ordering format.

GENERAL SPECIFICATIONS

- Panel thickness : 1,5 mm (.059) to 10 mm (.394)
- Total travel : 1,7 mm (.067) +/- 0,3 mm
- Low level or mechanical life : 1.000.000 cycles
- Torque : 1,5 Nm max. applied to nut

MOUNTING - STANDARD BEZEL

Panel cut-out

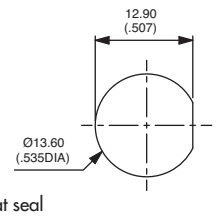

① Flat seal

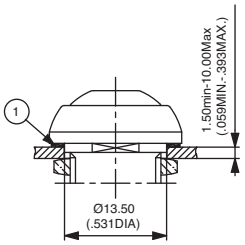

Matrix mounting

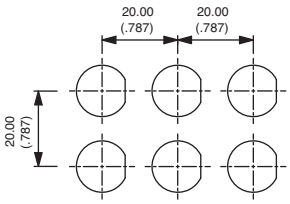

Back of panel space requirement

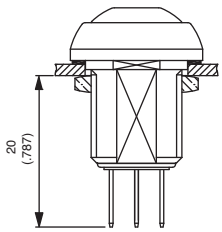

MOUNTING - REDUCED BEZEL

Panel cut-out

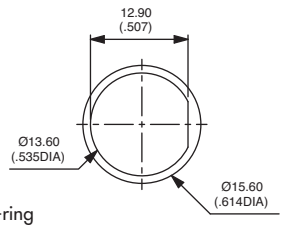

② O-ring

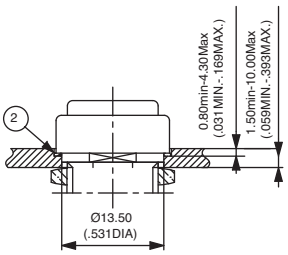

Matrix mounting

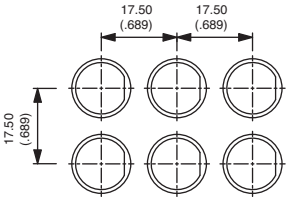

Back of panel space requirement

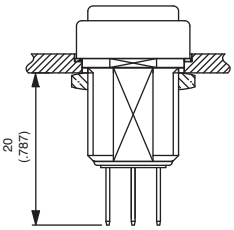

IM series

Sealed snap-action pushbutton switches - bushing Ø 12 mm - momentary

Overview

MODEL STRUCTURE

IM				
SERIES	Actuator shape	Electrical function	Terminals	Contacts

Actuator shape

R	Round, curved
P	Round, flat

Electrical function

7	NC + NO

Terminals

P	Straight PC
Z	Quick-connect

Contacts

4	Silver, gold plated (standard)

B1

OPTIONS

Actuator colours

1	Blue
B	Dark blue
2	Black
3	Green
4	Grey
5	Yellow
6	Red
7	White
9	Orange

Bushing & bezel finish

2	Black

Other : on request

Bezel options

Blank	Standard bezel
075	Dia. 15 (.590) reduced bezel, frontal mounting
234	Dia. 15 (.590) reduced bezel, std mounting

Actuator option

Blank	Std actuator
104	High actuator

Approval

UL

Consult factory for detail of approved models.

ABOUT THIS SERIES

On the following pages, you will find successively :
model structure of switches and options in the same order as in above chart

Dimensions : first dimensions are in mm while inches are shown as bracketed numbers.

NOTICE : please note that not all combinations of above numbers are available.
Refer to the following pages for further information.

A sealing boot is available to protect the switches against frost and sand (P/N U5125).
It is presented after the IA series and in section H.

Mounting accessories : Standard hardware supplied : 1 flat seal (standard bezel) or 1 O-ring (reduced bezel) and 1 hex nut 14 mm (.551) acrosss flats. Hex nut part number U166.

Packaging unit : 50 pieces

The company reserves the right to change specifications without notice.

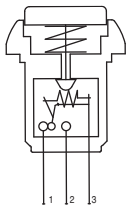

Function 7 (NC + NO)

Straight **P**

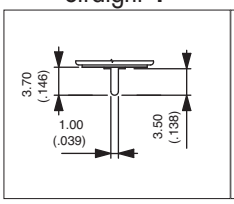

Quick-connect **Z**

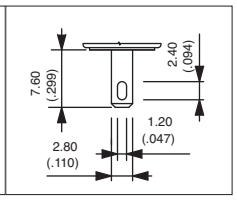

MODEL STRUCTURE

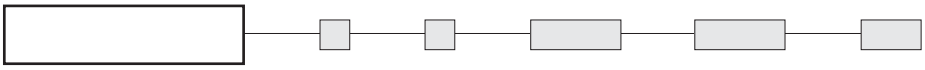

Common terminal identified by a horizontal dash

Standard bezel - straight PC terminals

Curved actuator
IMR7P4 NC+NO

Flat actuator
IMP7P4 NC+NO

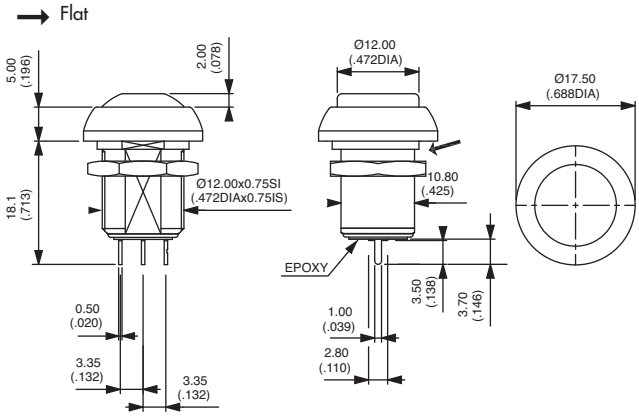

Standard bezel - quick-connect terminals

Curved actuator
IMR7Z4 NC+NO

Flat actuator
IMP7Z4 NC+NO

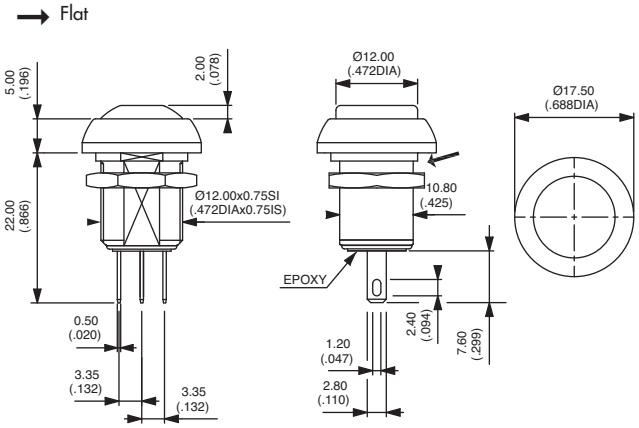

ACTUATOR COLOURS

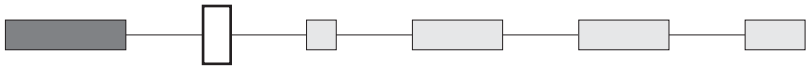

1 : blue - **B** : dark blue - **2** : black - **3** : green - **4** : grey - **5** : yellow - **6** : red - **7** : white - **9** : orange

BUSHING AND BEZEL COLOURS

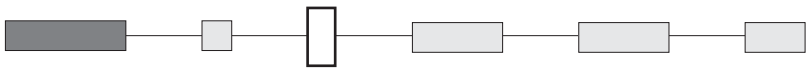

2 : black (standard)
Other : on request

BEZEL OPTIONS

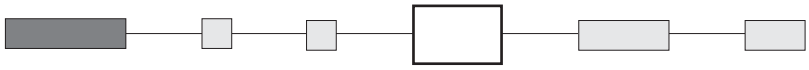

Blank Standard bezel

075 Dia. 15 (.590) reduced bezel, mounting of the switch from the front into a threaded panel cut-out

234 Dia. 15 (.590) reduced bezel, standard mounting

② O-ring

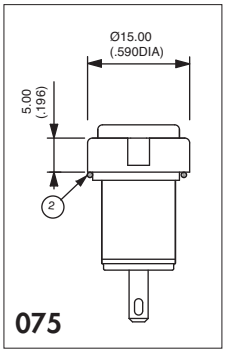

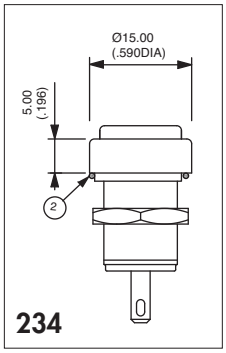

ACTUATOR OPTION

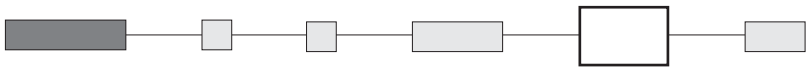

Blank Standard actuator

104 High actuator

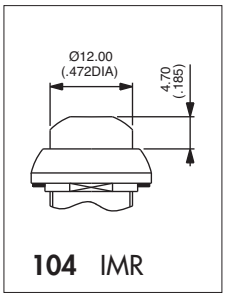

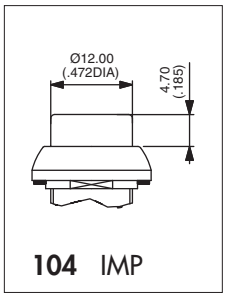

AGENCY APPROVAL

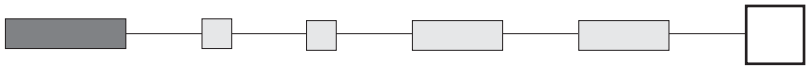

UL

Availability : consult factory for details of approved models.
Marking : to order switches marked UL, complete above box with "UL".

IP series

Pushbutton switches for harsh environments - bushing Ø 12 mm - momentary

Distinctive features and specifications

- ❑ **Illuminated or non-illuminated**
- ❑ **Tactile feedback**
- ❑ **Wide variety of configurations**
- ❑ **Flat round actuator for optional marking**
- ❑ **Sealed to IP67**

B1

ENVIRONMENTAL SPECIFICATIONS

- Front panel sealing : IP67 according to IEC 60529
  IP69K according to DIN 40050-9 (non-illuminated) with cap U5125
- Shock resistance : 100 g according to IEC 512-4, test 6c
- Vibration resistance : 10-500Hz - 10 g according to IEC 512-4, test 6d
- Salt spray : IEC 512-6, test 11f
- Robustness (non-illuminated) : IK06 according to EN 50102 (1 joule)
- Operating temperature : -40°C to +85°C

ELECTRICAL SPECIFICATIONS

- Max. current/voltage rating with resistive load (gold plated silver contacts):
  5A 28VDC, 70.000 cycles
  0,2A 48VDC, 500.000 cycles
  0,5A 48VAC, 500.000 cycles
- Initial contact resistance : 100 mΩ max.
- Insulation resistance : 1 GΩ min. at 500VDC
- Dielectric strength : 1.500 Vrms
- Contact bounce : 10 ms

For W terminals, current has to be limited to 400mA.

LED COMPONENT SPECIFICATIONS			
LED colour	Forward current	Typ. forward voltage	Max. forward voltage
Super red (L0S)	20mA	2,1V	2,3V
Yellow (L0Y)	20mA	2,1V	2,3V
Green (L0G)	20mA	2,1V	2,3V
Blue (L0B)	20mA	3,2V	3,8V
White (L0W)	20mA	3,35V	4,25V

A resistor must be series-connected by the user.

$$\text{Resistor value} = \frac{\text{supply voltage - LED forward voltage}}{\text{LED forward current}}$$

GENERAL SPECIFICATIONS

- Panel thickness : 1,5 mm (.059) min.
  4 mm (.157 max.)
- Total travel :
  Funct. 3 : 1,7 mm (.067) +/- 0,3 mm
  Funct. 5 : 1,3 mm (.051) +/- 0,3 mm
- Typical operating force : 6N +/- 2N
- Low level/mech. life : 1.000.000 cycles
- Torque : 1,5 Nm max. applied to nut
- Soldering : 320°C max. for 3 sec.

MATERIALS

- Case : thermoplastic UL94-V0
- Actuator : polyamide 6/6
- Bushing/bezel : zinc die-cast (zamac), black painted
- Contacts : silver, gold plated (std)
  brass, gold plated (for option 104)
- Output wires (flying lead terminals) :
  F version : AWG20, section 0,6 mm²
  W version : AWG24, section 0,23 mm²
- LED wires :
  F version : AWG26, section 0,12 mm²
  W version : AWG24, section 0,23 mm²
- Lens : polycarbonate
- Terminal seal : epoxy

AGENCY APPROVAL

2A 125VAC/250VAC
File E83438

See following pages.

MOUNTING

Panel cut-out

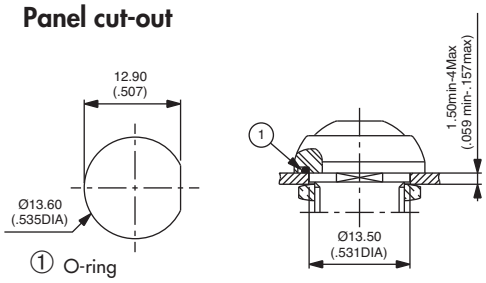

Matrix mounting

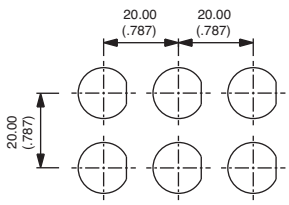

Back of panel space requirement

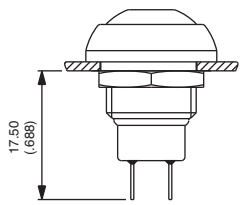

IP series

Pushbutton switches for harsh environments - bushing Ø 12 mm - momentary

Overview

MODEL STRUCTURE

IP

SERIES

Actuator shapes

C	Square
R	Round, curved
P	Round, flat

Electrical functions

3	Normally open (NO)
5	NC/NO combined (non-illuminated)

Terminals

S	Solder lugs
F	Flying leads, standard
W	Flying leads, thin NEW!
P	Straight PC
Z1	Quick-connect (non-ill., NO only)

Contacts

AD	Silver, gold plated (standard)
CD	Brass, gold plated (option 104)

B1

OPTIONS

Actuator colours

1	Blue
B	Dark blue
2	Black
3	Green
4	Grey
5	Yellow
6	Red
7/1	White
8	Bright chrome
9	Orange
A	Satin chrome

LED colours

Blank	Non-illum.
L0S	Super red
L0Y	Yellow
L0G	Green
L0B	Blue
L0W	White

Options

100	Satin chrome bezel
101	Bright chrome bezel
104	High actuator (non-illum. round models only)

Option 104
If combined with electrical function 5 (NC/NO), this option should be ordered with **CD** contacts (brass, gold plated). Current/voltage rating : 100mA 30VDC

Approval

UL
Consult factory for detail of approved models.

ABOUT THIS SERIES
On the following pages, you will find successively :
model structure of switches and options in the same order as in above chart

Dimensions : first dimensions are in mm while inches are shown as bracketed numbers.

NOTICE : please note that not all combinations of above numbers are available.
Refer to the following pages for further information.

A sealing boot is available to protect the switches against frost and sand. It is presented after the IA series and in section H.

Mounting accessories : Standard hardware supplied : 1 hex nut 14 mm (.551) across flats and 1 O-ring.
Hex nut part number U166.

Packaging unit : 25 pieces

The company reserves the right to change specifications without notice.

Pushbutton switches for harsh environments - bushing Ø 12 mm - momentary

Square - illuminated

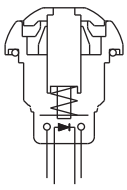

Function 3 (NO)

- High brightness illumination
- Five LED colours
- Tin plated LED terminals

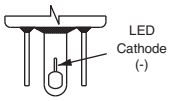

MODEL STRUCTURE

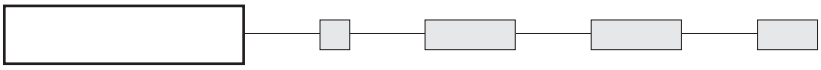

Shown with standard flying lead terminals.

Solder lug terminals

IPC3SAD Normally Open

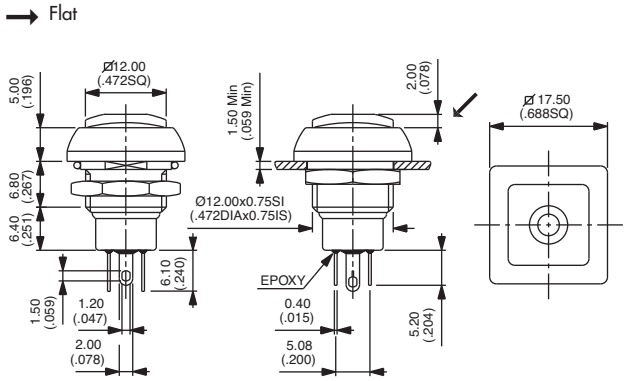

Also available with straight PC terminals : **IPC3PAD**
LED colour is indicated by the bottom of the switch.

Sealed flying lead terminals

IPC3FAD Normally Open

For THIN flying leads, replace F with W.

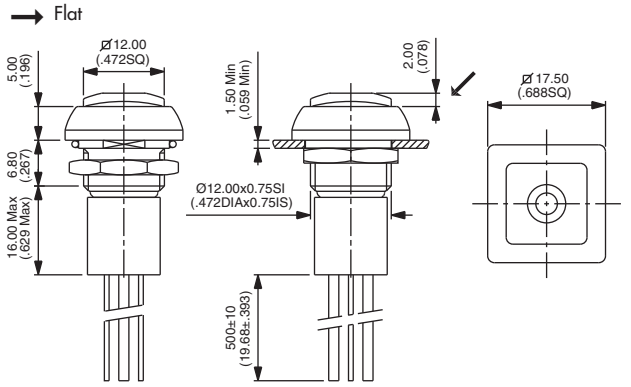

Wire colours : black : NO contact, red : LED anode(+), blue : LED cathode(-)

ACTUATOR COLOURS

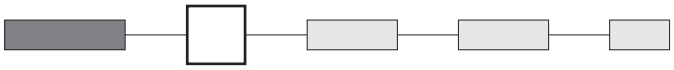

1 : blue - **B** : dark blue - **2** : black - **3** : green - **4** : grey
5 : yellow - **6** : red - **7/1** : white - **8** : bright chrome
9 : orange - **A** : satin chrome

LED COLOURS

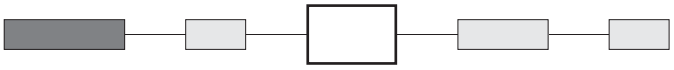

L0S : super red - **L0Y** : yellow - **L0G** : green - **L0B** : blue
L0W : white

OPTIONS

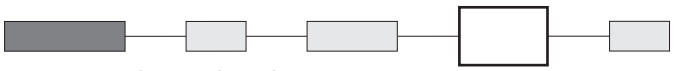

100 : Satin chrome bezel
101 : Bright chrome bezel

APPROVAL

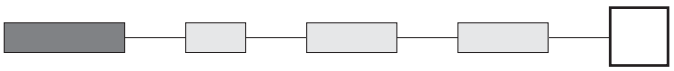

UL
Consult factory for details of approved models. To order switches marked UL, complete above box with "UL".

IP series

Pushbutton switches for harsh environments - bushing Ø 12 mm - momentary

Square - non-illuminated

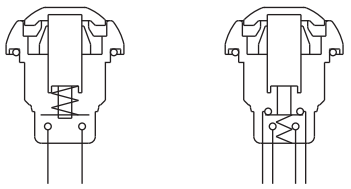

Function 3 (N0) Function 5 (NC/NO)

- Double function (NC/NO combined) with a short behind-panel depth

Straight **P** Quick-connect **Z1**

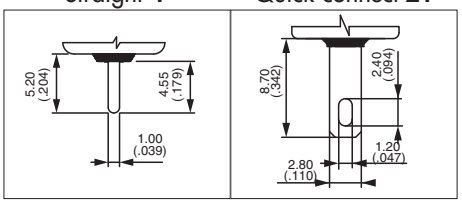

B1

MODEL STRUCTURE

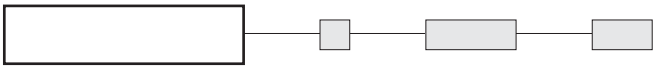

Shown with standard flying lead terminals.

Solder lug terminals

IPC3SAD Normally Open

IPC5SAD NC/NO combined

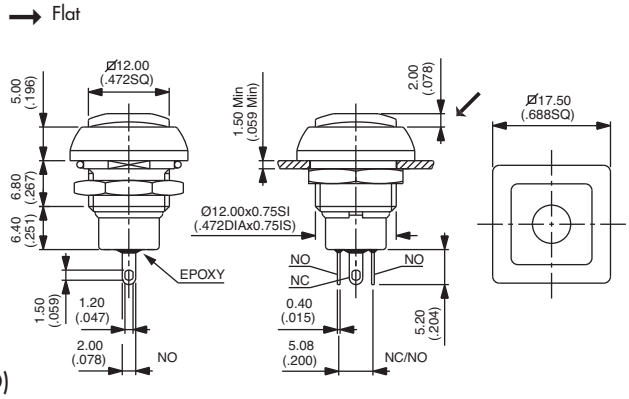

Also available with straight PC terminals : **IPC3PAD** (NO) or **IPC5PAD** (NC/NO) and quick-connect terminals : **IPC3Z1AD** (NO only)

Sealed flying lead terminals

IPC3FAD Normally Open

IPC5FAD NC/NO combined

For THIN flying leads, replace F with W.

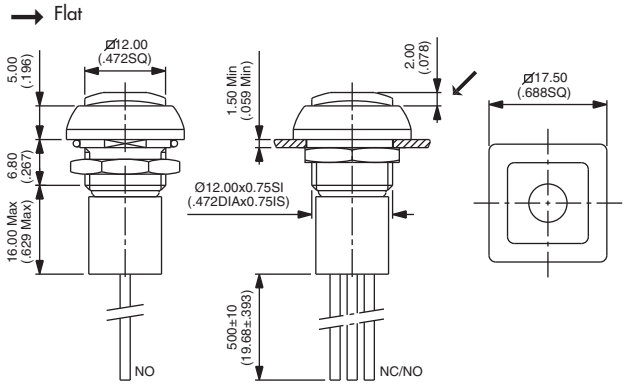

Wire colours (NC/NO) : black : NO, blue : NC

ACTUATOR COLOURS

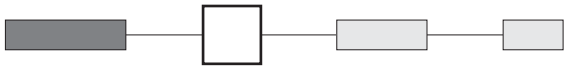

1 : blue - **B** : dark blue -**2** : black - **3** : green - **4** : grey - **5** : yellow - **6** : red - **7/1** : white - **8** : bright chrome
9 : orange - **A** : satin chrome

OPTIONS

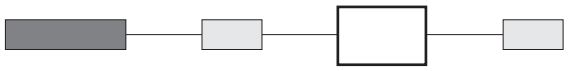

100 : Satin chrome bezel
101 : Bright chrome bezel

APPROVAL

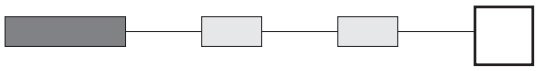

UL
Consult factory for details of approved models. To order switches marked UL, complete above box with "UL".

Pushbutton switches for harsh environments - bushing Ø 12 mm - momentary

Round - illuminated

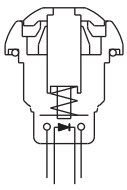

Function 3 (NO)

- High brightness illumination
- Five LED colours
- Tin plated LED terminals

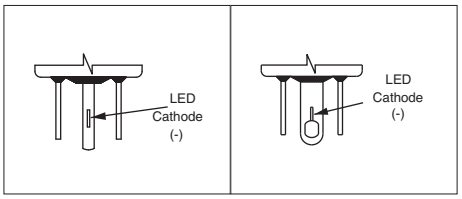

MODEL STRUCTURE

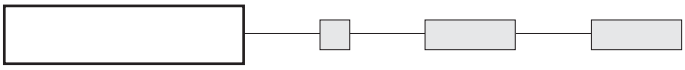

Shown with standard flying lead terminals.

Solder lug terminals

IPR3SAD Normally Open

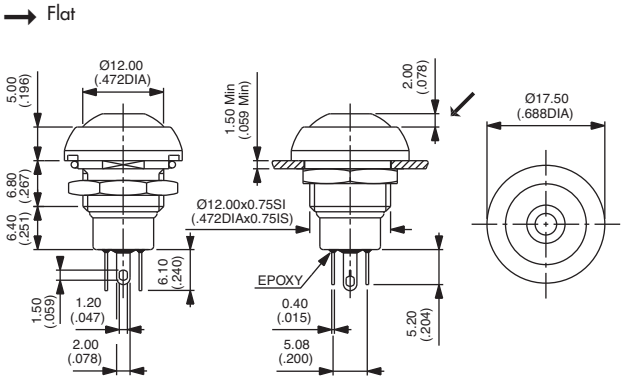

Also available with straight PC terminals : **IPR3PAD**
LED colour is indicated by the bottom of the switch.

Sealed flying lead terminals

IPR3FAD Normally Open

For THIN flying leads, replace F with W.

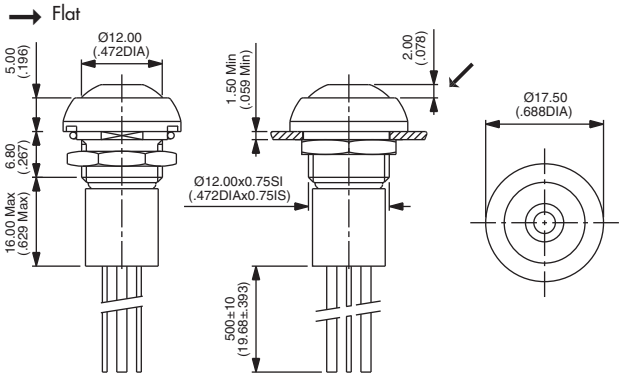

Wire colours : black : NO contact, red : LED anode(+), blue : LED cathode(-)

ACTUATOR COLOURS

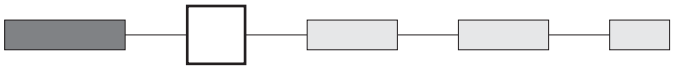

1 : blue - **B** : dark blue - **2** : black - **3** : green - **4** : grey
5 : yellow - **6** : red - **7/1** : white - **8** : bright chrome
9 : orange - **A** : satin chrome

LED COLOURS

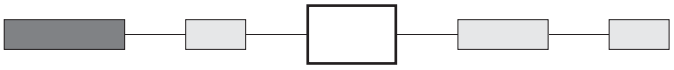

L0S : super red - **L0Y** : yellow - **L0G** : green - **L0B** : blue
L0W : white

OPTIONS

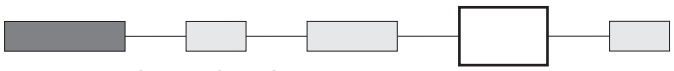

100 : Satin chrome bezel
101 : Bright chrome bezel

APPROVAL

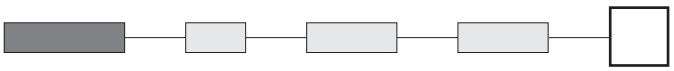

UL
Consult factory for details of approved models. To order switches marked UL, complete above box with "UL".

IP series

Pushbutton switches for harsh environments - bushing Ø 12 mm - momentary

Round - non-illuminated

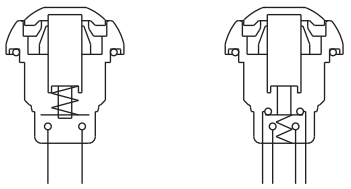

Function 3 (NO) Function 5 (NC/NO)

- Double function (NC/NO combined) with a short behind-panel depth

Straight **P** Quick-connect **Z1**

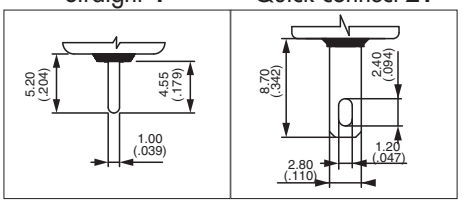

B1

MODEL STRUCTURE

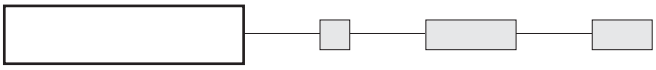

Shown with standard flying lead terminals.
Actuator marking available on IPP models (symbol 10 mm max.). On request.

Solder lug terminals

Curved actuator, NO
IPR3SAD
Curved actuator, NC/NO
IPR5SAD

Flat actuator, NO
IPP3SAD
Flat actuator, NC/NO
IPP5SAD

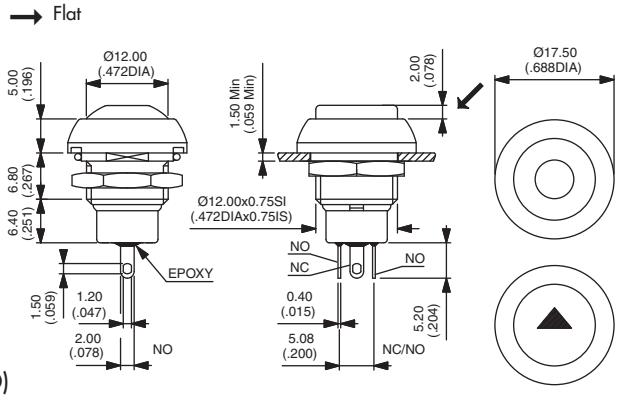

Also available with straight PC terminals : **IP•3PAD** (NO) or **IP•5PAD** (NC/NO) and quick-connect terminals : **IP•3Z1AD** (NO only)

Sealed flying lead terminals

Curved actuator, NO
IPR3FAD
Curved actuator, NC/NO
IPR5FAD

Flat actuator, NO
IPP3FAD
Flat actuator, NC/NO
IPP5FAD

For THIN flying leads, replace F with W.

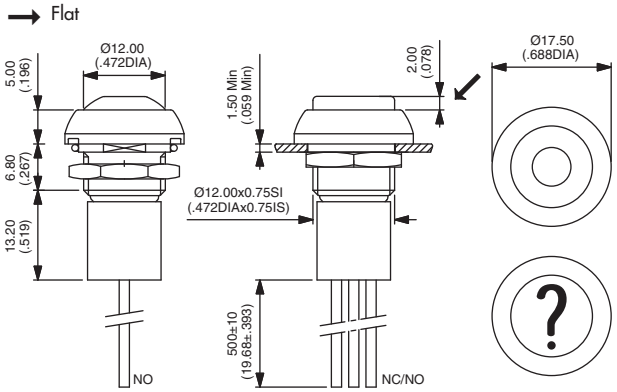

Wire colours (NC/NO) : black : NO, blue : NC

ACTUATOR COLOURS

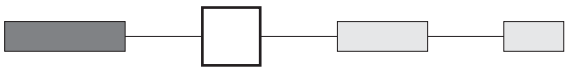

1 : blue - **B** : dark blue - **2** : black - **3** : green - **4** : grey
5 : yellow - **6** : red - **7/1** : white - **8** : bright chrome
9 : orange - **A** : satin chrome

OPTIONS

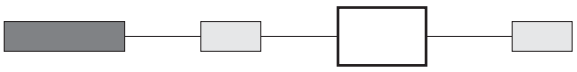

100 : Satin chrome bezel
101 : Bright chrome bezel
104 : High actuator - If combined with function 5 (NC/NO), order with CD contacts (instead of AD contacts).

APPROVAL

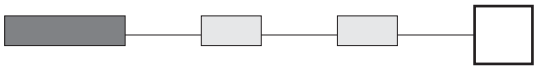

UL
Consult factory for details of approved models. To order switches marked UL, complete above box with "UL".

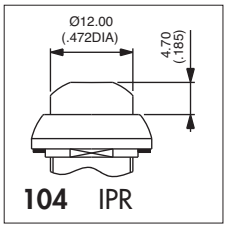

104 IPR

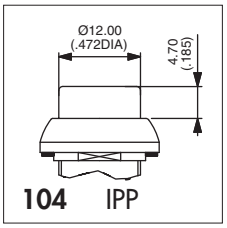

104 IPP

IP series

Pushbutton switches for harsh environments - bushing Ø 12 mm - latching

Distinctive features and specifications

- **Latching action**
  Actuator remains in the low position when "ON".
- **Illuminated or non-illuminated**
- **Compact**
  Behind-panel depth less than 20 mm (.787)
- **Flat round actuator for optional marking**
- **Sealed to IP67**

B1

ENVIRONMENTAL SPECIFICATIONS

- Front panel sealing : IP67 according to IEC 60529
- Shock resistance : 100 g according to IEC 512-4, test 6c
- Vibration resistance : 10-500Hz - 10 g according to IEC 512-4, test 6d
- Salt spray : IEC 512-6, test 11f
- Robustness (non-illuminated) : IK06 according to EN 50102 (1 joule)
- Operating temperature : -40°C to +85°C

GENERAL SPECIFICATIONS

- Panel thickness : 1,5 mm (.059) min. 5,5 mm (.217) max.
- Total travel : 2,5 mm (.098) +/- 0,3 mm
- Typical operating force : 5 N +/- 2N
- Low level/mech. life : 200.000 cycles
- Torque : 1,5 Nm max. applied to nut
- Soldering : 320°C max. for 3 sec.

ELECTRICAL SPECIFICATIONS

- Max. current/voltage rating with resistive load :
  4A 12VDC, 200.000 cycles
  1A 48VDC, 200.000 cycles
  2A 48VDC, 100.000 cycles
  3A 48VDC, 75.000 cycles
  1A 72VDC, 15.000 cycles
- Initial contact resistance : 100 mΩ max.
- Insulation resistance : 1 GΩ min. at 500VDC
- Dielectric strength : 1.500 Vrms between terminals
  1.000 Vrms between terminals and frame

For W terminals, current has to be limited to 400mA.

LED COMPONENT SPECIFICATIONS			
LED colour	Forward current	Typ. forward voltage	Max. forward voltage
Super red (L0S)	20mA	1,95V	1,95V
Yellow (L0Y)	20mA	2V	2,05V
Green (L0G)	20mA	2,1V	2,5V
Blue (L0B)	20mA	3,2V	4V

A resistor must be series-connected by the user.

$$\text{Resistor value} = \frac{\text{supply voltage - LED forward voltage}}{\text{LED forward current}}$$

MATERIALS

- Case : thermoplastic, UL 94-V0
- Actuator : polyamide 6/6
- Bushing/bezel : zinc die-cast (zamak), black painted
- Contacts : silver, gold plated
- Output wires (flying lead terminals) :
  F version : AWG20, section 0,6 mm²
  W version : AWG24, section 0,23 mm²
- LED wires :
  F version : AWG26, section 0,12 mm²
  W version : AWG24, section 0,23 mm²
- Lens : polycarbonate
- Terminal seal : epoxy

AGENCY APPROVAL

2A 125VAC/250VAC
File E83438

See following pages.

MOUNTING

Panel cut-out

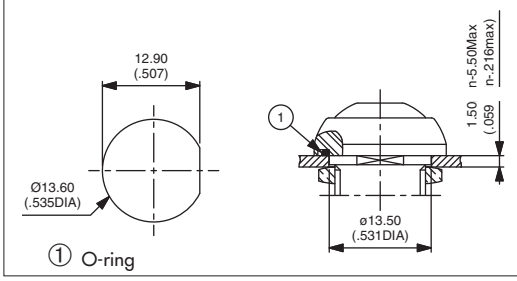

Matrix mounting

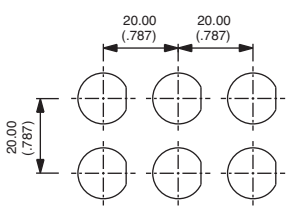

Back of panel space requirement

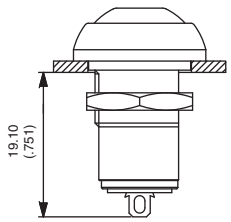

IP series

Pushbutton switches for harsh environments - bushing Ø 12 mm - latching

Overview

MODEL STRUCTURE

IP				
SERIES	Actuator shapes	Electrical function	Terminals	Contacts

Actuator shapes

C	Square
R	Round, curved
P	Round, flat

Electrical function

1	OFF - ON

Terminals

S	Solder lug
F	Flying leads, standard
W	Flying leads, thin NEW!
Z1	Quick-connect
P	Straight PC

Contacts

AD	Silver, gold plated

B1

OPTIONS

Actuator colours

1	Blue
B	Dark blue
2	Black
3	Green
4	Grey
5	Yellow
6	Red
7/1	White
8	Bright chrome
9	Orange
A	Satin chrome

LED colours

Blank	Non-illum.
L0S	Super red
L0Y	Yellow
L0G	Green
L0B	Blue

Options

100	Satin chrome bezel
101	Bright chrome bezel
104	High actuator (non-illum. round models only)

Approval

UL

Consult factory for detail of approved models.

ABOUT THIS SERIES

On the following pages, you will find successively :
model structure of switches and options in the same order as in above chart

Dimensions : first dimensions are in mm while inches are shown as bracketed numbers.

NOTICE : please note that not all combinations of above numbers are available.
Refer to the following pages for further information.

A sealing boot is available to protect the switches against frost and sand (P/N U5125).
It is presented after the IA series and in section H.

Mounting accessories : Standard hardware supplied : 1 hex nut 14 mm (.551) across flats and 1 O-Ring.

Packaging unit : 25 pieces

The company reserves the right to change specifications without notice.

IP series

Pushbutton switches for harsh environments - bushing Ø 12 mm - latching

Square or round - illuminated

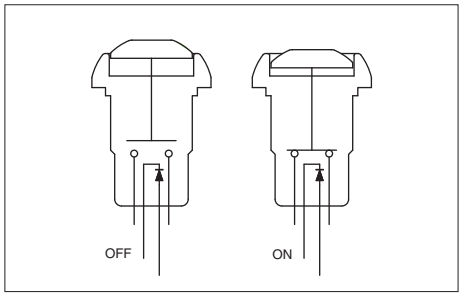

- Four LED colours
- Tin plated LED terminals

Straight **P**

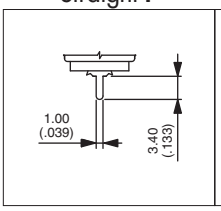

Quick-connect **Z1**

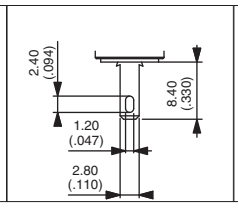

Solder lug **S**

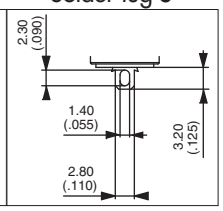

MODEL STRUCTURE

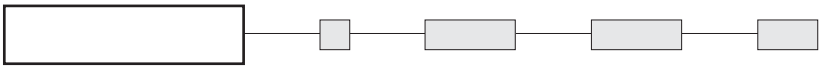

Shown with standard flying lead terminals.

B1

Square models

Solder lug terminals
IPC1SAD OFF - ON

Flying lead terminals
IPC1FAD OFF - ON

For THIN flying leads, replace F with W.

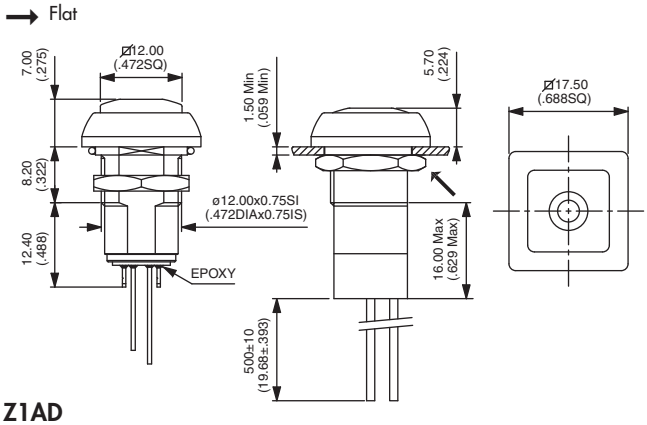

Also available with straight PC : **IPC1PAD** or quick-connect terminals : **IPC1Z1AD**

Round models

Solder lug terminals
IPR1SAD OFF - ON

Flying lead terminals
IPR1FAD OFF - ON

For THIN flying leads, replace F with W.

Wire colours : black : contact, red : LED anode(+), blue : LED cathode(-)

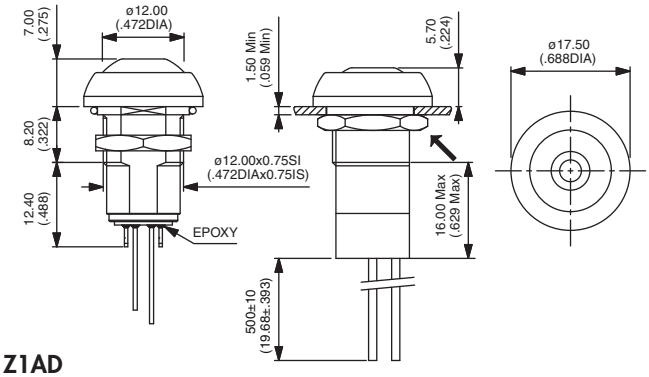

Also available with straight PC : **IPR1PAD** or quick-connect terminals : **IPR1Z1AD**

ACTUATOR COLOURS

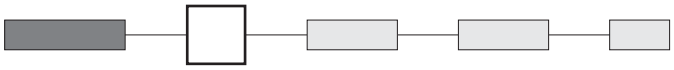

1 : blue - **B** : dark blue - **2** : black - **3** : green - **4** : grey
5 : yellow - **6** : red - **7/1** : white - **8** : bright chrome
9 : orange - **A** : satin chrome

LED COLOURS

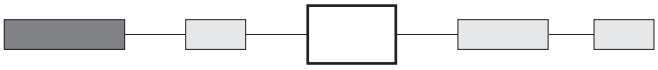

L0S : super red - **L0Y** : yellow - **L0G** : green - **L0B** : blue

OPTIONS

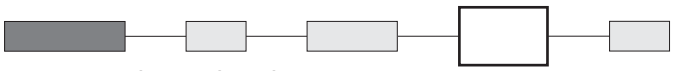

100 : Satin chrome bezel
101 : Bright chrome bezel

APPROVAL

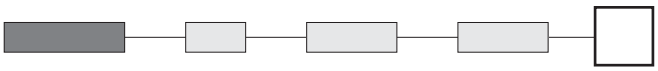

UL
Consult factory for details of approved models. To order switches marked UL, complete above box with "UL".

IP series

Pushbutton switches for harsh environments - bushing Ø 12 mm - latching

Square or round - non-illuminated

B1

MODEL STRUCTURE

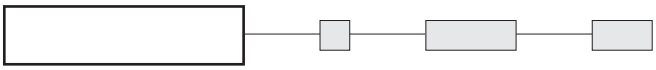

Shown with standard flying lead terminals.
Actuator marking available on IPP models (symbol 10 mm max.). On request.

Square models

Solder lug terminals
IPC1SAD OFF - ON

Flying lead terminals
IPC1FAD OFF - ON

For THIN flying leads, replace F with W.

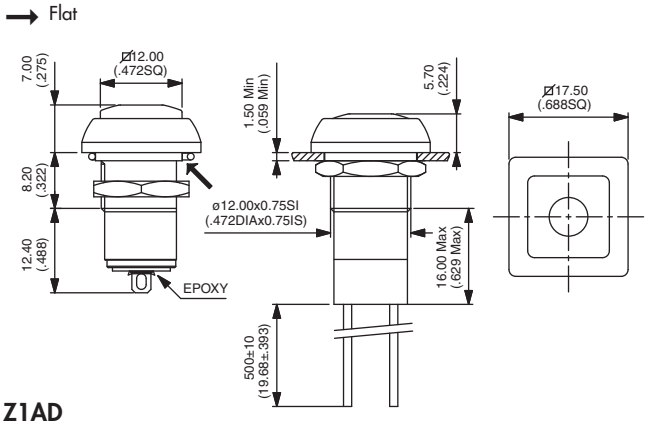

Also available with straight PC : **IPC1PAD** or quick-connect terminals : **IPC1Z1AD**

Round models

CURVED ACTUATOR
Solder lug terminals
IPR1SAD OFF - ON
Flying lead terminals
IPR1FAD OFF - ON

FLAT ACTUATOR
Solder lug terminals
IPP1SAD OFF - ON
Flying lead terminals
IPP1FAD OFF - ON

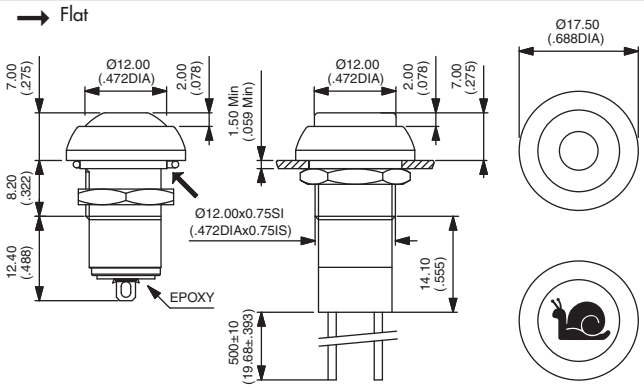

Also available with straight PC : **IP•1PAD** or quick-connect terminals : **IP•1Z1AD** For THIN flying leads, replace F with W.

ACTUATOR COLOURS

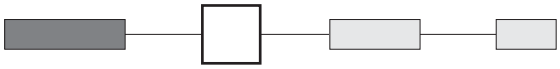

1 : blue - **B** : dark blue -**2** : black - **3** : green - **4** : grey - **5** : yellow - **6** : red - **7/1** : white - **8** : bright chrome
9 : orange - **A** : satin chrome

OPTIONS

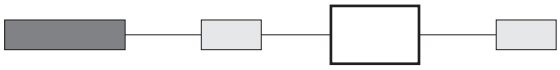

100 : Satin chrome bezel
101 : Bright chrome bezel
104 : High actuator (for round model only)

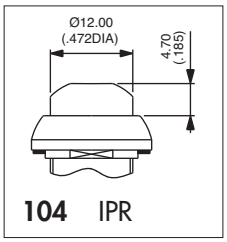

104 IPR

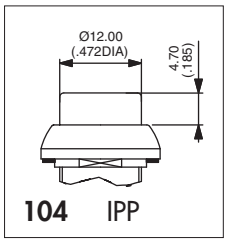

104 IPP

APPROVAL

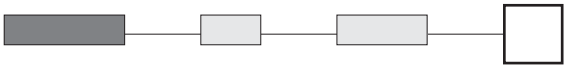

UL
Consult factory for details of approved models. To order switches marked UL, complete above box with "UL".

IB and IS series

Sealed pushbutton switches - bushing Ø 12 mm - momentary

Distinctive features and specifications

- ❑ **Snap-in and threaded bushing models**
- ❑ **Compact, light in weight**
  - Behind-panel depth of 13 mm (.512) only
  - 50 % reduction in weight compared to metallic models
- ❑ **Tactile feedback**
- ❑ **Sealed to IP67 (IS series) or IP54 (IB series)**

B1

ENVIRONMENTAL SPECIFICATIONS

- Front panel sealing according to IEC 60529 : IP67 (IS) or IP54 (IB)
- Shock resistance : 100 g according to IEC 512-4, test 6c
- Vibration resistance : 10-500 Hz - 10 g according to IEC 512-4, test 6d
- Salt spray : IEC 512-6, test 11f
- Operating temperature : -40°C to +85°C

MATERIALS

- Case : thermoplastic UL94-V0
- Actuator : polyamide 6/6
- Bushing/bezel : polyamide 6/6
- Contacts : silver, gold plated
- Terminal seal : epoxy

ELECTRICAL SPECIFICATIONS

- Max. current/voltage rating with resistive load :
  400mA 32VAC - 100mA 48VDC
- Initial contact resistance : 50 mΩ max.
- Insulation resistance : 1 GΩ min. at 500VDC
- Dielectric strength : 1.000 Vrms
- Electrical life at full load : 500.000 cycles

AGENCY APPROVAL

2A 125VAC/250VAC
File E83438

Availability : consult factory for details of approved models.

Marking : to order switches marked UL, complete approrpiate box of ordering format.

GENERAL SPECIFICATIONS

- Panel thickness :
  - IB series : 0,8 mm (.031) min. - 1,8 mm (.071) max.
  - IS series : 1,5 mm (.059) min. - 4 mm (.157) max.
- Total travel : 1,7 mm (.066) +/- 0,3 mm
- Typical operating force : 4N +/- 3N
- Low level or mechanical life : 1.000.000 cycles
- Torque : 1,5 Nm max. applied to nut
- Soldering : 300°C max. for 3 seconds

Example of custom switch: see end of the series.

Panel mounting : see next pages.

The company reserves the right to change specifications without notice.

IB and IS series

Sealed pushbutton switches - bushing Ø 12 mm - momentary

Overview

MODEL STRUCTURE

SERIES

IB	Snap-in
IS	Threaded bushing

Actuator shapes

R	Round, curved
P	Round, flat

Electrical function

3	Normally open (NO)

Terminals

S	Solder lug
P	Straight PC
Z1	Quick-connect 2,8 x 0,5 mm

Contacts

AD	Silver, gold plated

B1

OPTIONS

Actuator colours

1	Blue
B	Dark blue
2	Black
3	Green
4	Grey
5	Yellow
6	Red
7/1	White
8	Bright chrome
9	Orange
A	Satin chrome

Bezel finish

00	Black (std)
08	Bright chrome (IS only)
10	White
20	Satin chrome (IS only)

Option

104	High actuator

Approval

UL

Consult factory for detail of approved models.

ABOUT THIS SERIES

On the following pages, you will find successively :
- model structure of switches and options in the same order as in above chart

Dimensions : first dimensions are in mm while inches are shown as bracketed numbers.

NOTICE : please note that not all combinations of above numbers are available.
Refer to the following pages for further information.

A sealing boot is available to protect the switches against frost and sand. It is presented after the IA series and in section H.

Mounting accessories : Standard hardware supplied : 1 flat seal (IB series)
1 hex nut 14 mm (.551) across flats and 1 flat seal (IS series). Hex nut part number U166.

Packaging unit : 50 pieces

IB and IS series

Sealed pushbutton switches - bushing Ø 12 mm - momentary

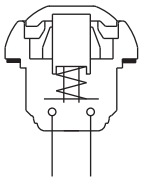

Function 3 (NO)

- Ten actuator colours
- Curved or flat actuator
- Antirotation bushing

Straight **P**

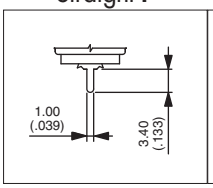

Solder lug **S**

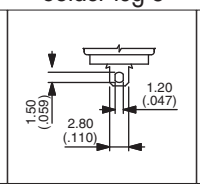

Quick-connect **Z1**

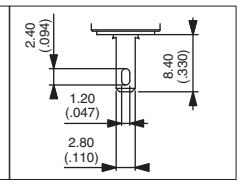

MODEL STRUCTURE

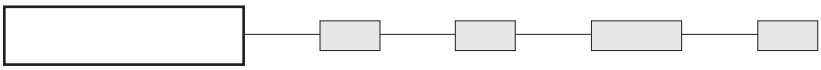

Actuator marking available on IBP and ISP models (symbol 10 mm max.). On request.

B1

Snap-in mounting - solder lug terminals

→ Flat

Panel thickness : 0,8 mm to 1,8 mm

Curved actuator
IBR3SAD — Normally open

Flat actuator
IBP3SAD — Normally open

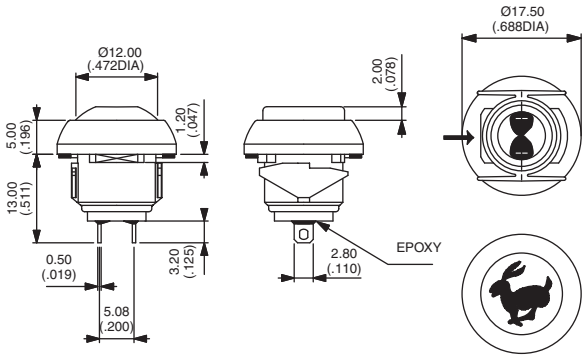

Also available with straight PC : **IB•3PAD** or quick-connect terminals : **IB•3Z1AD**

Mounting by threaded bushing - solder lug terminals

→ Flat

Panel thickness : 1,5 mm to 4 mm

Curved actuator
ISR3SAD — Normally open

Flat actuator
ISP3SAD — Normally open

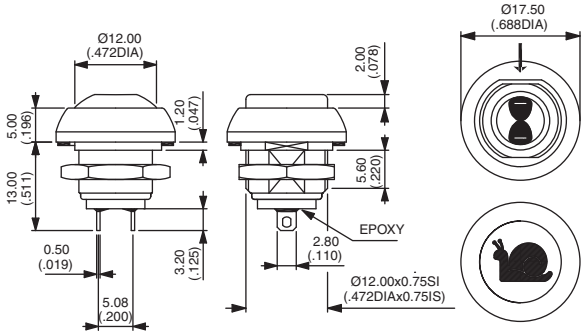

Also available with straight PC : **IS•3PAD** or quick-connect terminals : **IS•3Z1AD**

ACTUATOR COLOURS

Actuator marking available on IBP and ISP models (symbol 10 mm max.). On request.

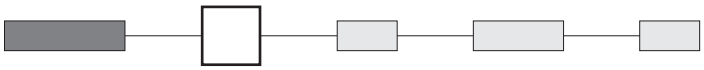

1 : blue - **B** : dark blue - **2** : black - **3** : green - **4** : grey - **5** : yellow - **6** : red - **7/1** : white - **8** : bright chrome
9 : orange - **A** : satin chrome

BUSHING AND BEZEL FINISH

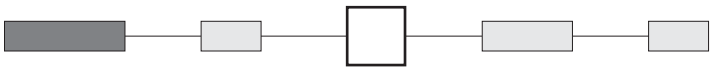

00 : Black (standard)
08 : Bright chrome (IS series only)
10 : White
20 : Satin chrome (IS series only)

IB and IS series

Sealed pushbutton switches - bushing Ø 12 mm - momentary

ACTUATOR OPTION

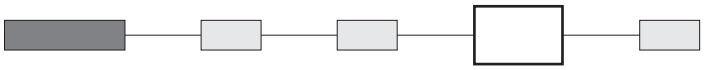

104 : High actuator

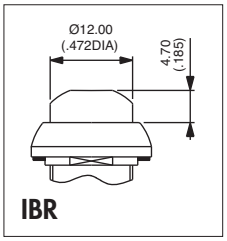

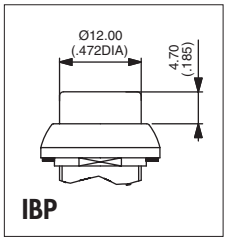

APPROVAL

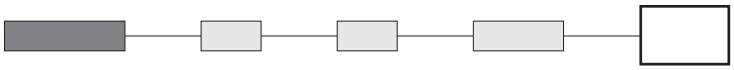

UL

Availability : consult factory for details of approved models.
Marking : to order switches marked UL, complete above box with "UL".

B1

IB SERIES MOUNTING

Panel cut-out

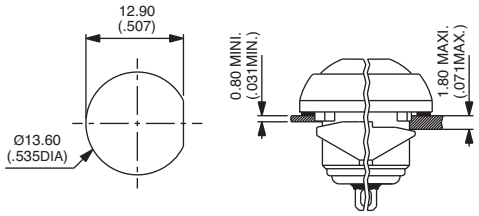

Matrix mounting

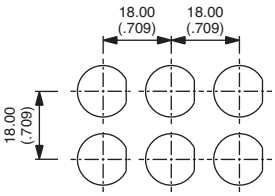

IS SERIES MOUNTING

Panel cut-out

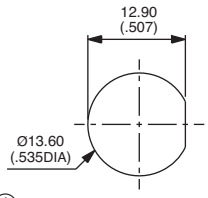

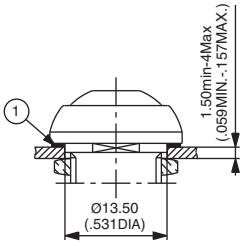

① Flat seal

Matrix mounting

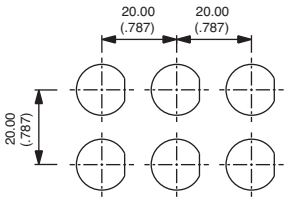

Example of custom switch

ISR3FADB22X1248-01

- Painted bushing and actuator, soft feel
- Flying leads (55 mm) + connector
- Overmolded rear part

IHS series

Hall effect pushbutton switches - bushing Ø 12 mm - momentary

Distinctive features and specifications

- ❑ **Momentary pushbutton (NO)**
- ❑ **5 million cycles**
- ❑ **Low behind-panel depth**
- ❑ **Standard and high actuator**
- ❑ **Sealed to IP67**

B1

ENVIRONMENTAL SPECIFICATIONS

- Front panel sealing : IP67 according to IEC 60529
- Operating temperature : -40°C to +85°C

ELECTRICAL SPECIFICATIONS

- Supply voltage : 3,5VDC to 24VDC
- Supply current : VDC = 12V : 2,5mA Typ. to 5mA max. (current consumption in OFF position)
- Max. output current : 50mA
- Max. output voltage : 24VDC
- Output type : NPN

GENERAL SPECIFICATIONS

- Panel thickness : 1,5 mm (.059) min. 4 mm (.157) max.
- Total travel : 1,80 mm (.070) +/- 0,3 mm
- Typical operating force : 6N +/- 2N
- Mechanical life : 5 million cycles
- Torque : 1,5 Nm max. applied to nut

MATERIALS

- Case : PBT, UL94-V0
- Actuator : polyamide 6/6
- Bushing/bezel : zinc die-cast (zamac), black painted
- Multi-wire lead : AWG26, 150 mm

WIRING DIAGRAM

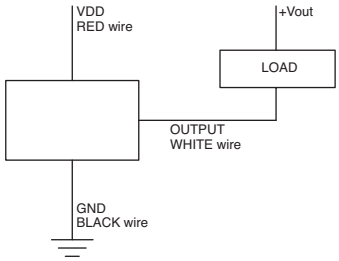

MOUNTING

Panel cut-out

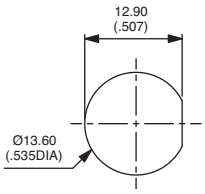

① O-ring

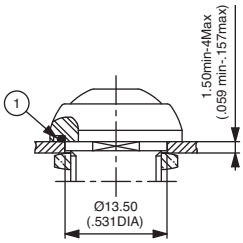

Matrix mounting

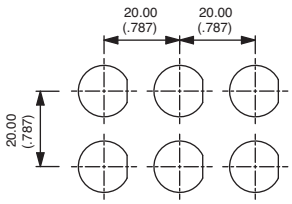

Back of panel space requirement

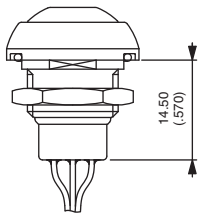

The company reserves the right to change specifications without notice.

IHS series

Hall effect pushbutton switches - bushing Ø 12 mm - momentary

Overview

MODEL STRUCTURE

IHS				
SERIES	Actuator shapes	Electrical function	Operating force	Terminals

Actuator shapes

R	Round
H	Round, high

Electrical function

3	Normally open (NO)

Operating force

6	6N

Terminals

F	Flying leads

B1

OPTIONS

Actuator colours

1	Blue
2	Black
3	Green
4	Grey
5	Yellow
6	Red
7	White
9	Orange
B	Dark blue

Options

Blank	None
100	Satin chrome bezel
101	Bright chrome bezel

ABOUT THIS SERIES
On the following pages, you will find successively :
model structure of switches and options in the same order as in above chart

Dimensions : first dimensions are in mm while inches are shown as bracketed numbers.

NOTICE : please note that not all combinations of above numbers are available.
Refer to the following pages for further information.

A sealing boot is available to protect the switches against frost and sand (P/N U5125). It is presented after the IA series and in section H.

Mounting accessories : Standard hardware supplied : 1 hex nut 14 mm (.551) across flats and 1 O-ring.
Hex nut part number U166.

Packaging unit : 25 pieces

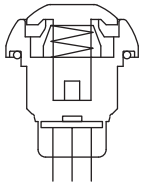

Function 3 (NO)

- Standard or high actuator

MODEL STRUCTURE

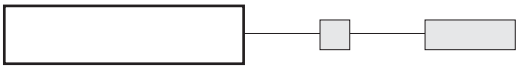

Standard actuator

IHSR36F Normally Open

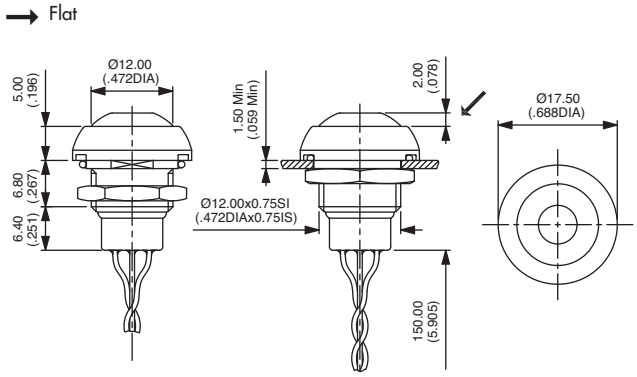

High actuator

IHSH36F Normally Open

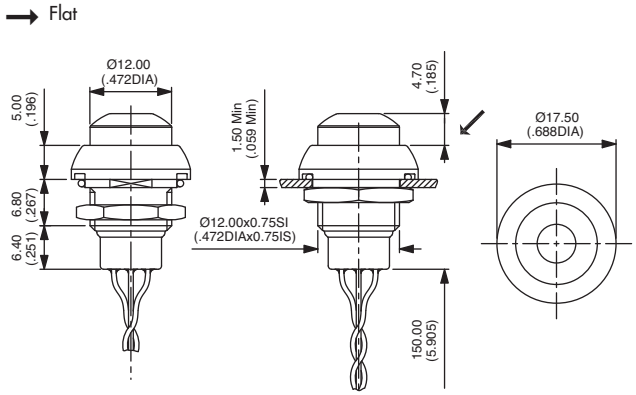

ACTUATOR COLOURS

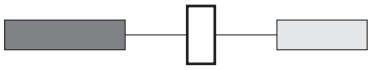

1 : blue - **2** : black - **3** : green - **4** : grey - **5** : yellow - **6** : red - **7** : white - **9** : orange - **B** : dark blue

OPTIONS

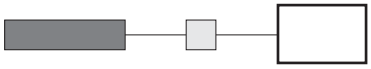

100 : Satin chrome bezel
101 : Bright chrome bezel

IHL series

Hall effect pushbutton switches - bushing Ø 12 mm - linear

Distinctive features and specifications

- ❑ **Linear output pushbutton**
- ❑ **0,5 to 4,5 volt output**
- ❑ **Different operating force**
- ❑ **5 million cycles**
- ❑ **Sealed to IP67**

B1

ENVIRONMENTAL SPECIFICATIONS

- Front panel sealing : IP67 according to IEC 60529
- Operating temperature : -40°C to +85°C
- EMC testing : 10V per meter extend to radiated fields in freq. range of 80 Mhz to 1.000 MHz. 1KHz 80 % sine wave modulation according to IEC/EN 61000-4-3

GENERAL SPECIFICATIONS

- Panel thickness : 1,5 mm (.059) min. 10 mm (.393) max.
- Total travel : 4 mm (.160) +/- 0,3 mm
- Mechanical life : 5 million cycles
- Torque : 1 Nm max. applied to nut

ELECTRICAL SPECIFICATIONS

- Supply voltage : 4,5VDC to 5,5VDC without regulator
  6,5VDC to 24VDC with 5V regulator
- Supply current : 9mA max.
- Max. output current : 1,25mA
- Max. output voltage with or without regulator : see graph below.

MATERIALS

- Case : PA46, UL94-V0
- Actuator : polyamide 6/6
- Bushing : polyamide 6/6
- Multi-wire lead : AWG26, 150 mm

WIRING DIAGRAM

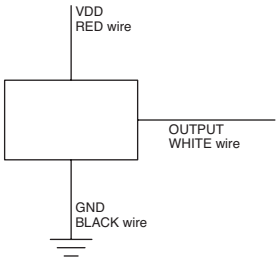

LINEAR OUTPUT GRAPH (VDC = 5V@20°C)

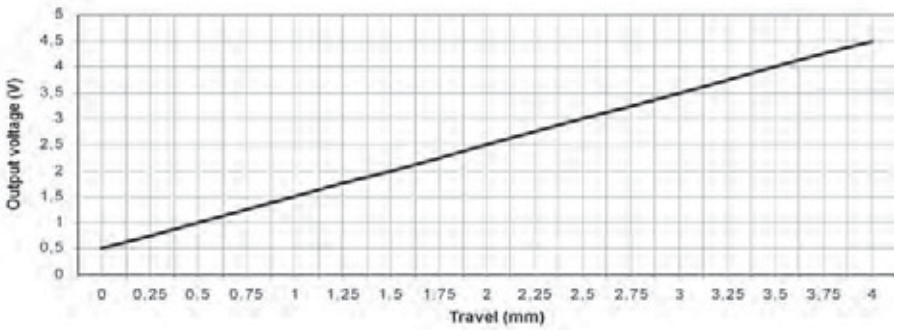

MOUNTING

Panel cut-out ② O-ring

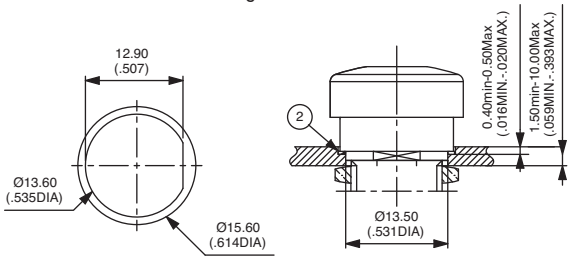

Matrix mounting

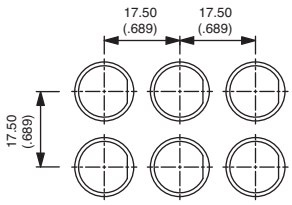

Back of panel space requirement

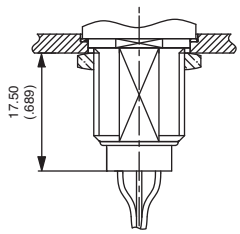

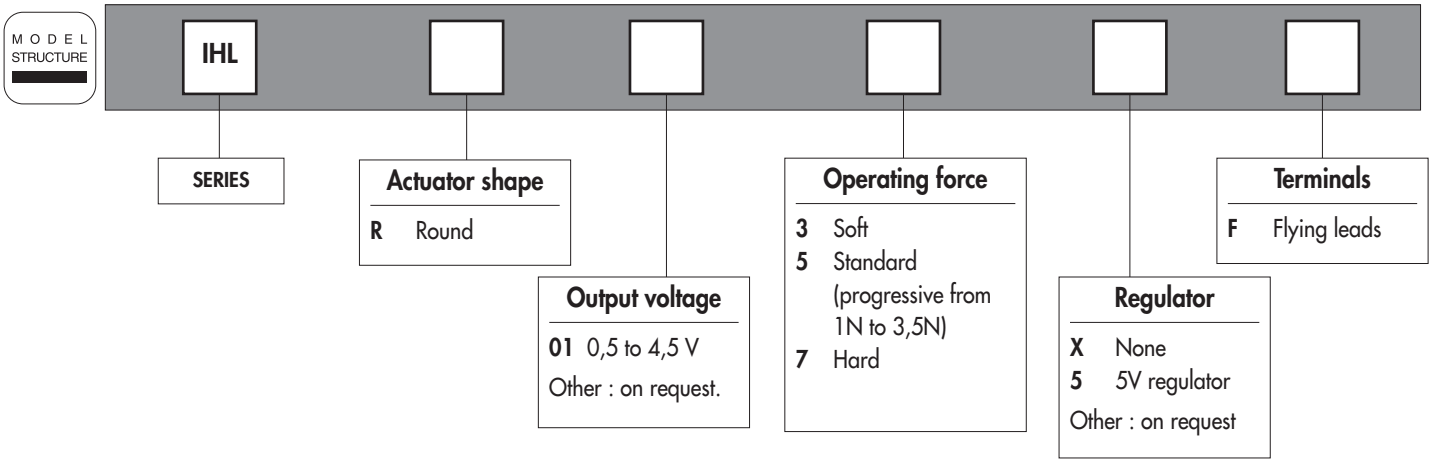

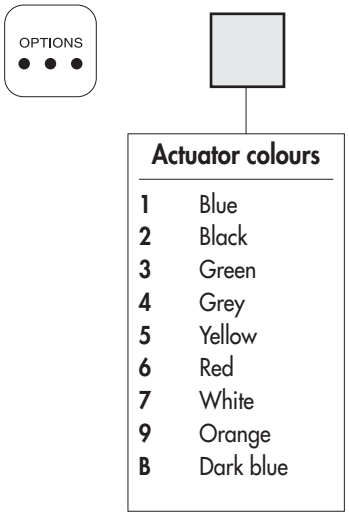

ABOUT THIS SERIES
On the following pages, you will find successively :
model structure of switches and options in the same order as in above chart

Dimensions : first dimensions are in mm while inches are shown as bracketed numbers.

NOTICE : please note that not all combinations of above numbers are available.
Refer to the following pages for further information.

Mounting accessories : Standard hardware supplied : 1 hex nut 14 mm (.551) across flats and 1 O-ring.
Hex nut part number U166.

Packaging unit : 25 pieces

IHL series

Hall effect pushbutton switches - bushing Ø 12 mm - linear

Round - non-illuminated

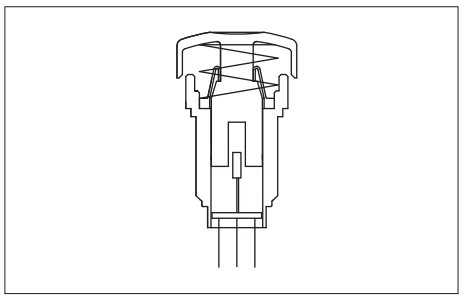

- With or without regulator

MODEL STRUCTURE

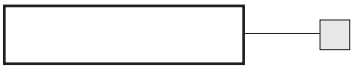

B1

Without regulator

Soft operating force
IHLR013XF

Standard operating force
IHLR015XF

Hard operating force
IHLR017XF

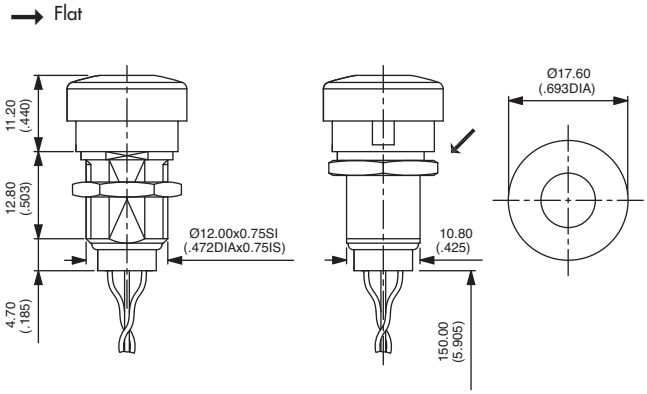

With 5V regulator

Soft operating force
IHLR0135F

Standard operating force
IHLR0155F

Hard operating force
IHLR0175F

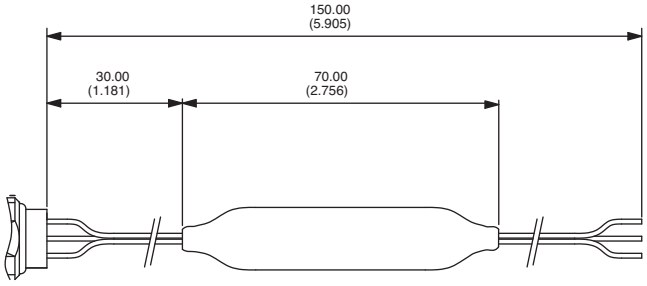

ACTUATOR COLOURS

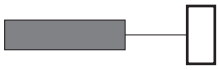

1 : blue - **2** : black - **3** : green - **4** : grey - **5** : yellow - **6** : red - **7** : white - **9** : orange - **B** : dark blue

Like the IR series, the IQ series is a range of sealed pushbutton switches with dia. 16 mm bushing. But IQ pushbuttons feature snap-in mounting for easier and faster installation. Momentary and latching versions are available.

Main features

- **Snap-in mounting for easy installation**
- **Tactile feedback**
- **Sealed to IP54**
- **Illuminated or non-illuminated**
- **Square or round actuator**
- **Wide choice of actuator and illumination colours**
- **Flat round actuator for optional marking**

Momentary versions

- Electrical function : NO
- Five terminal options, including screw terminals
- Silver contacts for screw terminal types
- Gold plated silver contacts for other types

Solder lug terminals

Flying lead terminals

Screw terminals

Latching versions

- Electrical function : OFF-ON
- Four terminal options
- Gold plated silver contacts

Solder lug terminals

Flying lead terminals

The company reserves the right to change specifications without notice.

IQ series

Sealed pushbutton switches - bushing Ø 16 mm - snap-in mounting - momentary

Distinctive features and specifications

- ❑ **Snap-in mounting for easy installation**
- ❑ **Momentary models**
- ❑ **Illuminated or non-illuminated**
- ❑ **Flat round actuator for optional marking**
- ❑ **Sealed to IP54**

B1

ENVIRONMENTAL SPECIFICATIONS

- Front panel sealing : IP54 according to IEC 60529
- Shock resistance : 100 g according to IEC 512-4, test 6c
- Vibration resistance : 10-500Hz - 10 g according to IEC 512-4, test 6d
- Salt spray : IEC 512-6, test 11f
- Operating temperature : -40°C to +85°C

ELECTRICAL SPECIFICATIONS

- Max. current/voltage rating with resistive load :
  - Gold plated contacts :
    Code 4 : 200mA 48VDC, 500.000 cycles
    Code 7 : 5A 28VDC, 70.000 cycles
  - Silver contacts (code 2) - screw terminals : 4A 48VDC, 500.000 cycles
- Initial contact resistance : 100 mΩ max.
- Insulation resistance : 1 GΩ min. at 500VDC
- Dielectric strength : 1.500 Vrms

LED COMPONENT SPECIFICATIONS			
LED colour	Forward current	Typ. forward voltage	Max. forward voltage
Super red (L0S)	20mA	2,1V	2,3V
Yellow (L0Y)	20mA	2,1V	2,3V
Green (L0G)	20mA	2,1V	2,3V
Blue (L0B)	20mA	3,2V	3,8V
White (L0W)	20mA	3,35V	4,25V

A resistor must be series-connected by the user.

$$\text{Resistor value} = \frac{\text{supply voltage - LED forward voltage}}{\text{LED forward current}}$$

On flying lead versions, the LED resistor can be integrated by APEM on request.

GENERAL SPECIFICATIONS

- Panel thickness :
  with flat seal : 2,20 mm (.088) max.
  without flat seal : 3 mm (.118) max.
- Total travel : 1,6 mm (.062) +/- 0,3 mm
- Typical operating force : 4N +/- 2N
- Low level or mechanical life :
  1.000.000 cycles
- Soldering : 320°C max. for 3 sec.

MATERIALS

- Case : thermoplastic UL94-V0
- Actuator : polyamide 6/6
- Bushing/bezel : polyamide 6/6
- Contacts :
  4 and **7** : silver, gold plated
  2 : silver (screw terminals)
- Multi-wire lead AWG20,
  section 0,6 mm²
- LED wire : AWG26,
  section 0,12 mm²
- Lens : polycarbonate
- Terminal seal : epoxy

MOUNTING

Panel cut-out

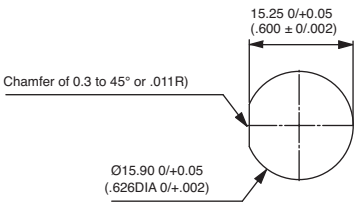

① Flat seal

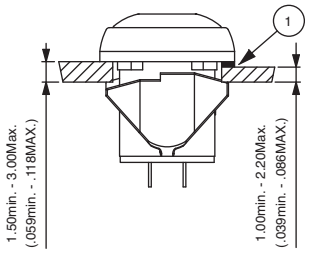

Back of panel space requirement

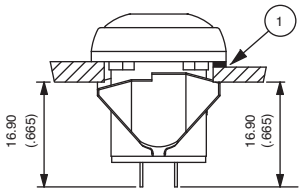

Matrix mounting

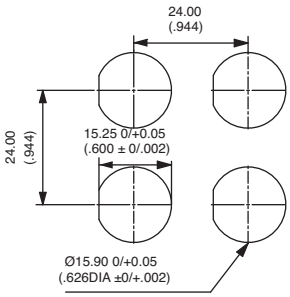

Sealed pushbutton switches - bushing Ø 16 mm - snap-in mounting - momentary

Overview

MODEL STRUCTURE

IQ

SERIES

Actuator shape

- **C** Square
- **R** Round, curved
- **P** Round, flat

Electrical function

- **3** Normally open (NO)

Terminals

- **S** Solder lugs
- **F** Flying leads
- **P** Straight PC
- **Z** Quick-connect (non-illuminated)
- **V** Screw (non-illuminated)

Contacts

- **4** Silver, gold plated
- **2** Silver (screw terminals only)

OPTIONS

Actuator colour

- **1** Blue
- **2** Black
- **3** Green
- **4** Grey
- **5** Yellow
- **6** Red
- **7** White
- **9** Orange
- **A** Satin chrome
- **B** Dark blue

Bushing & bezel finish

- **2** Black (std)

Other : on request.

LED colour

- **Blank** Non-illum.
- **L0S** Super red
- **L0Y** Yellow
- **L0G** Green
- **L0B** Blue
- **L0W** White

ABOUT THIS SERIES

On the following pages, you will find successively :
model structure of switches and options in the same order as in above chart

Dimensions : first dimensions are in mm while inches are shown as bracketed numbers.

NOTICE : please note that not all combinations of above numbers are available.
Refer to the following pages for further information.

Mounting accessories : Standard hardware supplied : 1 flat seal

Packaging unit : 25 pieces for flying lead models - 40 pieces for other models

IQ series

Sealed pushbutton switches - bushing Ø 16 mm - snap-in mounting - momentary

Round - illuminated

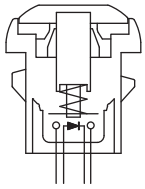

Function 3 (NO)

- Five LED colours
- Tin plated LED terminals
- Gold plated contacts

Solder lug **S** | Straight **P**

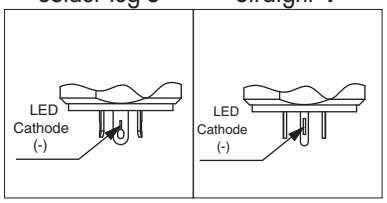

B1

MODEL STRUCTURE

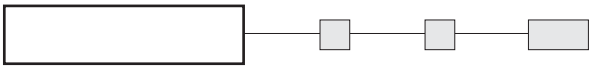

Actuator marking available on IQP models (symbol 12 mm max.). On request.

Solder lug terminals

Curved actuator **IQR3S4** — Normally Open

Flat actuator **IQP3S4** — Normally Open

Also available with straight PC terminals : **IQ•3P4**.
LED colour is indicated by the bottom of the switch.

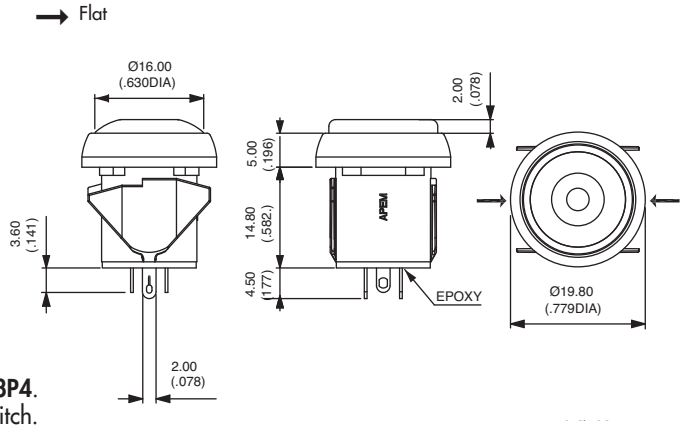

Sealed flying lead terminals

Curved actuator **IQR3F4** — Normally Open

Flat actuator **IQP3F4** — Normally Open

Wire colours : black : NO contact,
red : LED anode (+), blue : LED cathode (-)

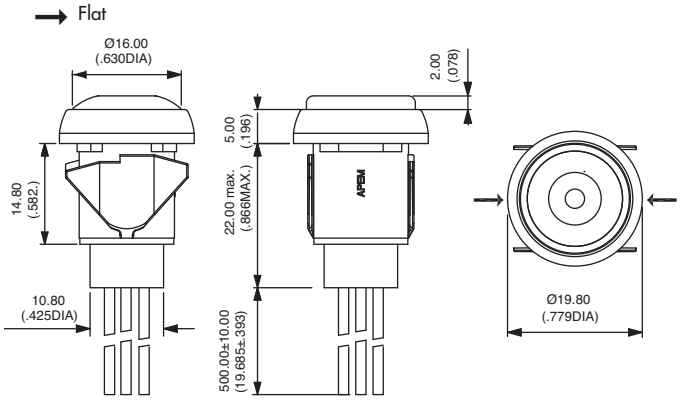

ACTUATOR COLOUR

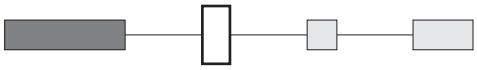

1 : blue - **2** : black - **3** : green - **4** : grey - **5** : yellow - **6** : red - **7** : white - **9** : orange - **A** : satin chrome - **B** : dark blue

BUSHING AND BEZEL FINISH

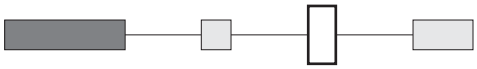

2 : black (standard)

LED COLOUR

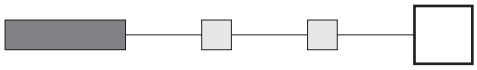

L0S : super red - **L0Y** : yellow - **L0G** : green - **L0B** : blue
L0W : white

Sealed pushbutton switches - bushing Ø 16 mm - snap-in mounting - momentary

Round - non-illuminated

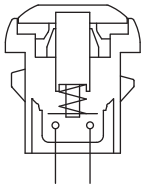

Function 3 (NO)

- Gold plated or silver contacts depending on terminal type

Straight **P**

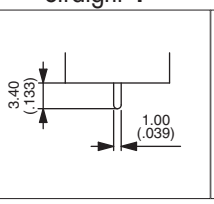

Quick-connect **Z**

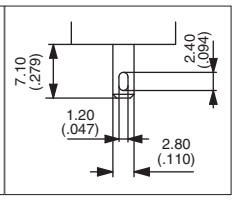

MODEL STRUCTURE

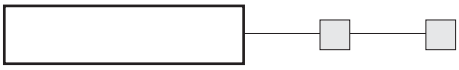

Actuator marking available on IQP models (symbol 12 mm max.). On request.

B1

Solder lug terminals - gold plated contacts

Curved actuator
IQR3S4 Normally open

Flat actuator
IQP3S4 Normally open

→ Flat

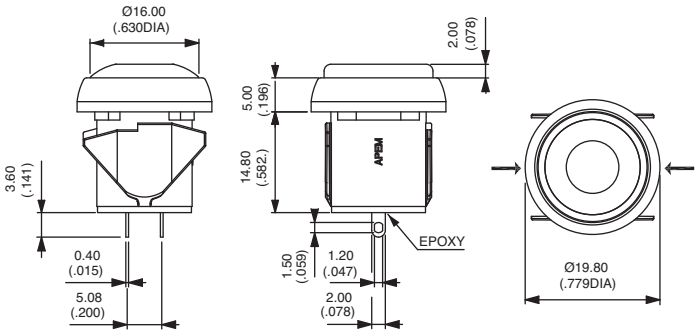

Also available with straight PC terminals : **IQ•3P4** and quick-connect terminals : **IQ•3Z4**.

Sealed flying lead terminals - gold plated contacts

Curved actuator
IQR3F4 Normally open

Flat actuator
IQP3F4 Normally open

→ Flat

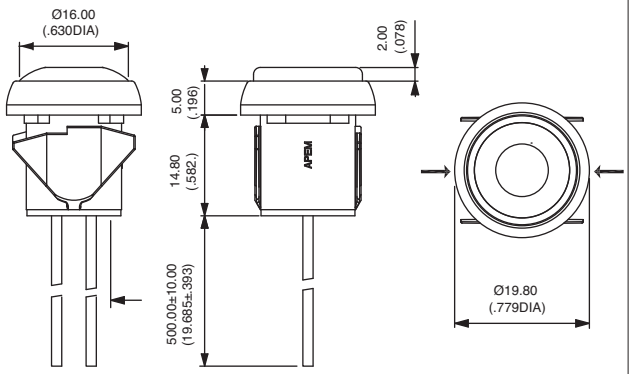

Screw terminals - silver contacts

Curved actuator
IQR3V2 Normally open

Flat actuator
IQP3V2 Normally open

→ Flat

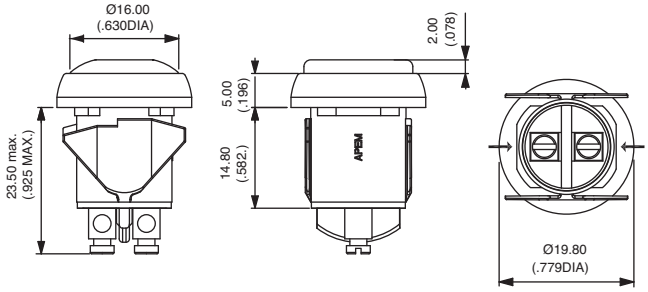

Actuator colour and bushing/bezel finish : select the desired codes on previous page.

IQ series

Sealed pushbutton switches - bushing Ø 16 mm - snap-in mounting - momentary

Square - illuminated

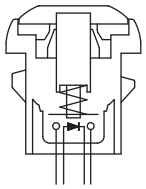

Function 3 (NO)

- Five LED colours
- Tin plated LED terminals
- Gold plated contacts

Solder lug **S** | Straight **P**

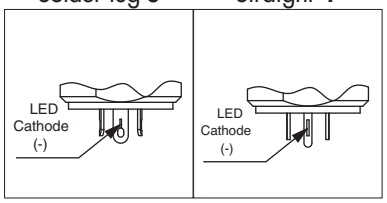

MODEL STRUCTURE

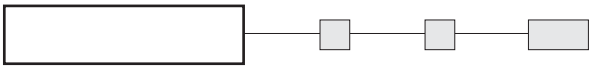

B1

Solder lug terminals

IQC3S4

Normally Open

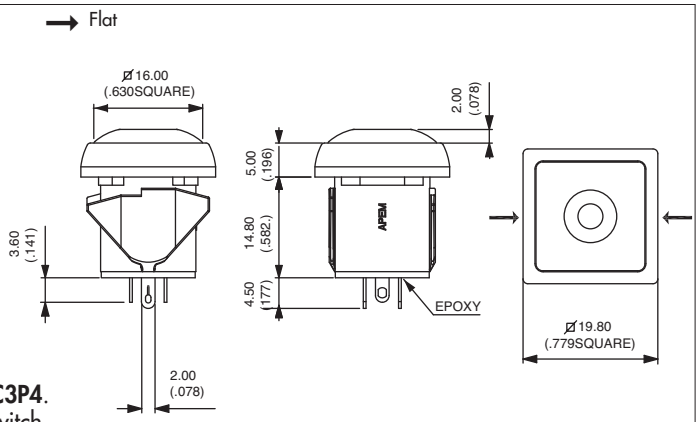

Also available with straight PC terminals : **IQC3P4**.
LED colour is indicated by the bottom of the switch.

Sealed flying lead terminals

IQC3F4

Normally Open

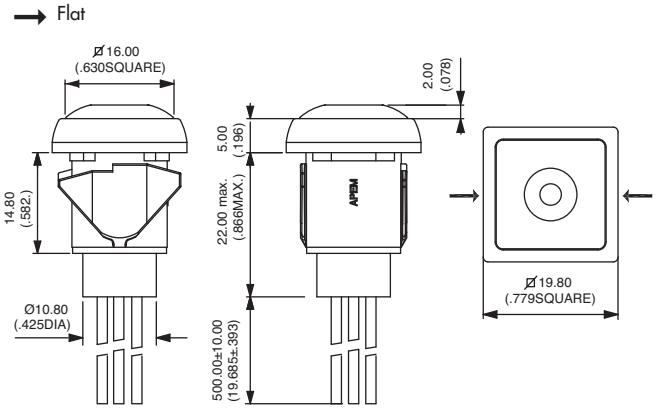

Wire colours : black : NO contact,
red : LED anode (+), blue : LED cathode (-)

ACTUATOR COLOUR

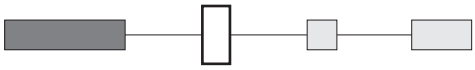

1 : blue - **2** : black - **3** : green - **4** : grey - **5** : yellow - **6** : red - **7** : white - **9** : orange - **A** : satin chrome - **B** : dark blue

BUSHING AND BEZEL FINISH

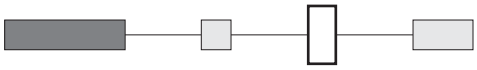

2 : black (standard)

LED COLOUR

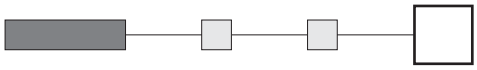

L0S : super red - **L0Y** : yellow - **L0G** : green - **L0B** : blue
L0W : white

Sealed pushbutton switches - bushing Ø 16 mm - snap-in mounting - momentary

Square - non-illuminated

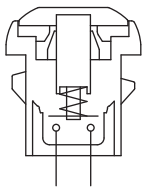

Function 3 (NO)

- Gold plated or silver contacts depending on terminal type

Straight **P**

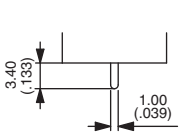

Quick-connect **Z**

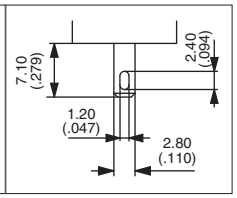

MODEL STRUCTURE

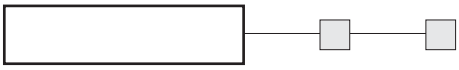

B1

Solder lug terminals - gold plated contacts

IQC3S4 Normally Open

→ Flat

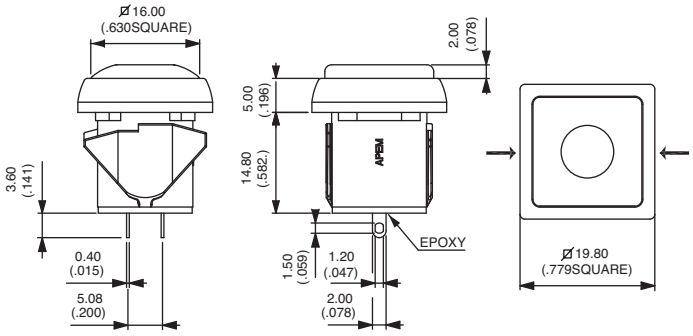

Also available with straight PC terminals : **IQC3P4** or quick-connect terminals : **IQC3Z4**.

Sealed flying lead terminals - gold plated contacts

IQC3F4 Normally Open

→ Flat

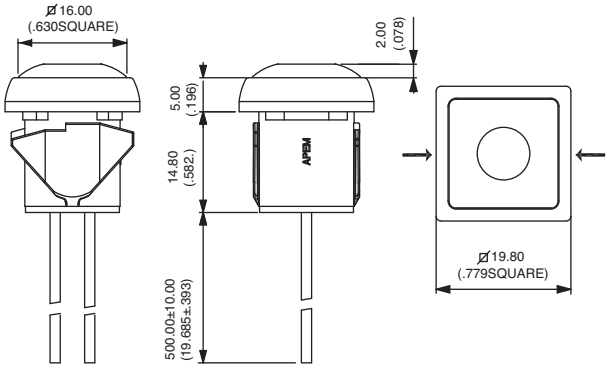

Screw terminals - silver contacts

IQC3V2 Normally Open

→ Flat

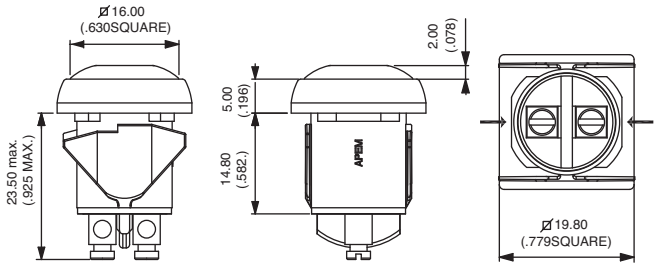

Actuator colour and bushing/bezel finish : select the desired codes on previous page.

IQ series

Sealed pushbutton switches - bushing Ø 16 mm - snap-in mounting - latching

Distinctive features and specifications

- ❑ **Snap-in mounting for easy installation**
- ❑ **Latching action models**
- ❑ **Illuminated or non-illuminated**
- ❑ **Flat round actuator for optional marking**
- ❑ **Sealed to IP54**

B1

ENVIRONMENTAL SPECIFICATIONS

- Front panel sealing : IP54 according to IEC 60529
- Shock resistance : 100 g according to IEC 512-4, test 6c
- Vibration resistance : 10-500Hz - 10 g according to IEC 512-4, test 6d
- Salt spray : IEC 512-6, test 11f
- Operating temperature : -40°C to +85°C

ELECTRICAL SPECIFICATIONS

- Max. current/voltage rating with resistive load (gold plated contacts) :
  - Code 4 : 100mA 24VDC, 200.000 cycles
  - Code 7 : 4A 12VDC, 200.000 cycles
    1A 48VDC, 200.000 cycles
    3A 48VDC, 75.000 cycles
- Initial contact resistance : 100 mΩ max.
- Insulation resistance : 1 GΩ min. at 500VDC
- Dielectric strength : 1.500 Vrms between terminals

LED COMPONENT SPECIFICATIONS

LED colour	Forward current	Typ. forward voltage	Max. forward voltage
Super red (L0S)	20mA	1,95V	1,95V
Yellow (L0Y)	20mA	2V	2,05V
Green (L0G)	20mA	2,1V	2,5V
Blue (L0B)	20mA	3,2V	4V

A resistor must be series-connected by the user.

$$\text{Resistor value} = \frac{\text{supply voltage - LED forward voltage}}{\text{LED forward current}}$$

On flying lead versions, the LED resistor can be integrated by APEM on request.

GENERAL SPECIFICATIONS

- Panel thickness :
  with flat seal : 2,20 mm (.088) max.
  without flat seal : 3 mm (.118) max.
- Total travel : 2,5 mm (.098) +/- 0,3 mm
- Typical operating force : 5N +/- 2N
- Low level or mechanical life :
  200.000 cycles
- Soldering : 320°C max. for 3 sec.

MATERIALS

- Case : thermoplastic UL94-V0
- Plunger : polyamide
- Bushing/bezel : polyamide
- Contacts : silver, gold plated (codes **4** and **7**)
- Multi-wire lead AWG20, section 0,6 mm²
- LED wire : AWG26, section 0,12 mm²
- Lens : polycarbonate
- Terminal seal : epoxy

MOUNTING

Panel cut-out

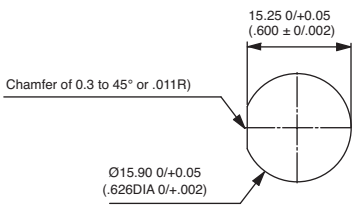

① Flat seal

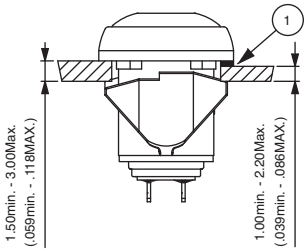

Back of panel space requirement

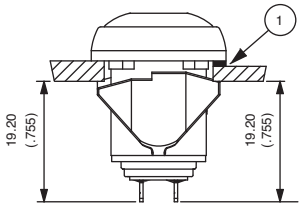

Matrix mounting

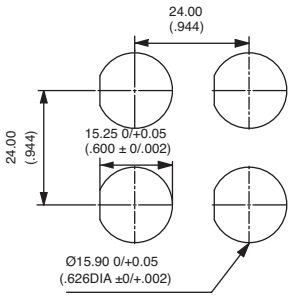

MODEL STRUCTURE

IQ

SERIES

Actuator shape

C	Square
R	Round, curved
P	Round, flat

Electrical function

1	OFF - ON

Terminals

S	Solder lugs
F	Flying leads
P	Straight PC
Z	Quick-connect

Contacts

4	Silver, gold plated

OPTIONS

Actuator colour

1	Blue
2	Black
3	Green
4	Grey
5	Yellow
6	Red
7	White
9	Orange
A	Satin chrome
B	Dark blue

Bushing & bezel finish

2	Black (standard)

Other : on request.

LED colour

Blank	Non-illum.
L0S	Super red
L0Y	Yellow
L0G	Green
L0B	Blue

ABOUT THIS SERIES
On the following pages, you will find successively :
model structure of switches and options in the same order as in above chart

Dimensions : first dimensions are in mm while inches are shown as bracketed numbers.

NOTICE : please note that not all combinations of above numbers are available.
Refer to the following pages for further information.

Mounting accessories : Standard hardware supplied : 1 flat seal

Packaging unit : 25 pieces for flying lead models - 40 pieces for other models

IQ series

Sealed pushbutton switches - bushing Ø 16 mm - snap-in mounting - latching

Round - illuminated

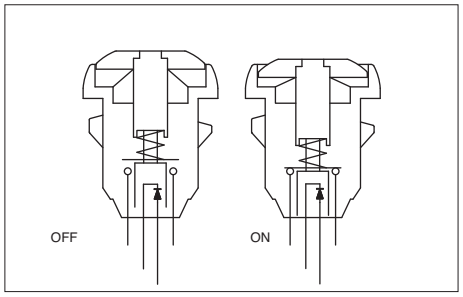

- Four LED colours
- Tin plated LED terminals
- Gold plated contacts

Solder lug **S**

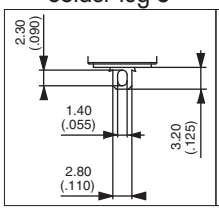

Straight **P**

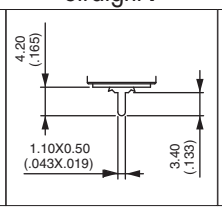

Quick-connect **Z**

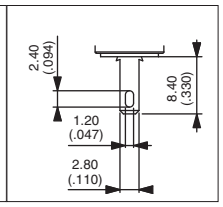

B1

MODEL STRUCTURE

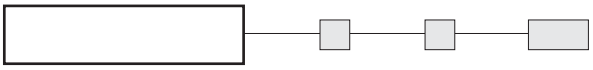

Plunger marking available on IQP models (symbol 12 mm max.). On request.

Solder lug terminals

Curved actuator
IQR1S4 OFF - ON

Flat actuator
IQP1S4 OFF - ON

Also available with straight PC terminals : **IQ•1P4**
& quick-connect terminals : **IQ•1Z4**.

→ Flat

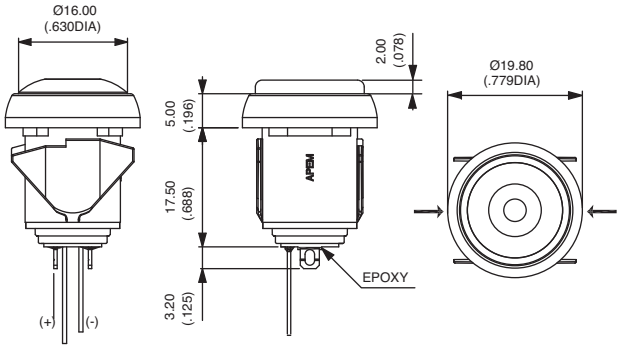

Sealed flying lead terminals

Curved actuator
IQR1F4 OFF - ON

Flat actuator
IQP1F4 OFF - ON

Wire colours : black : contact,
red : LED anode (+), blue : LED cathode (-)

→ Flat

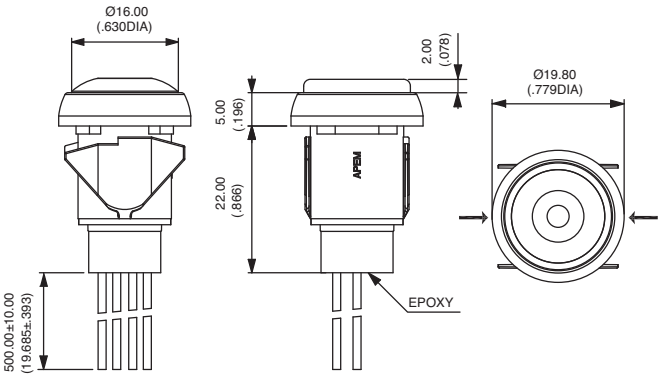

ACTUATOR COLOUR

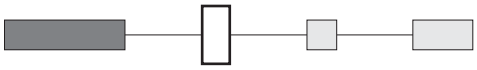

1 : blue - **2** : black - **3** : green - **4** : grey - **5** : yellow - **6** : red - **7** : white - **9** : orange - **A** : satin chrome - **B** : dark blue

BUSHING AND BEZEL FINISH

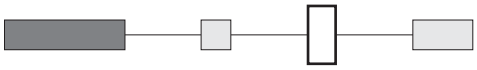

2 : black (standard)

LED COLOUR

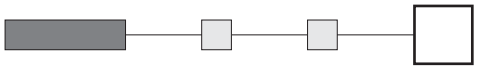

L0S : super red - **L0Y** : yellow - **L0G** : green - **L0B** : blue

Sealed pushbutton switches - bushing Ø 16 mm - snap-in mounting - latching

Round - non-illuminated

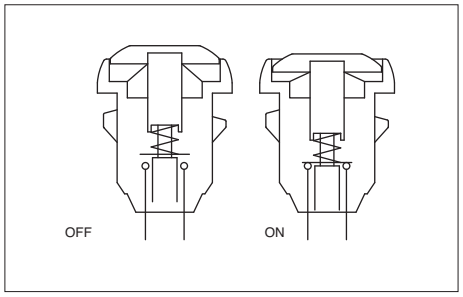

• Gold plated contacts

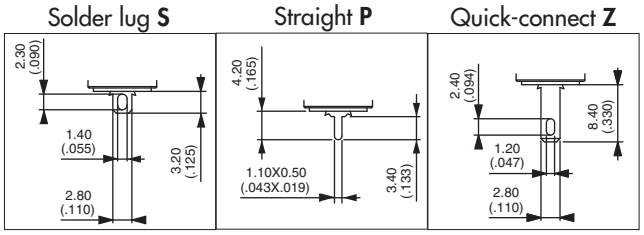

MODEL STRUCTURE

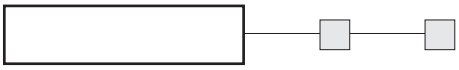

Plunger marking available on IQP models (symbol 12 mm max.). On request.

B1

Solder lug terminals

Curved actuator
IQR1S4 OFF - ON

Flat actuator
IQP1S4 OFF - ON

Also available with straight PC terminals : **IQ•1P4**
& quick-connect terminals : **IQ•1Z4**.

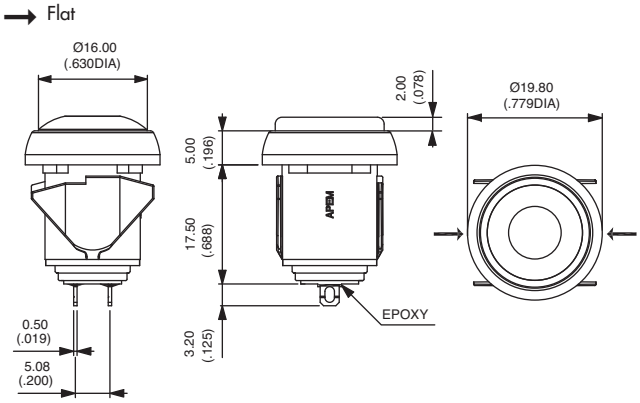

Sealed flying lead terminals

Curved actuator
IQR1F4 OFF - ON

Flat actuator
IQP1F4 OFF - ON

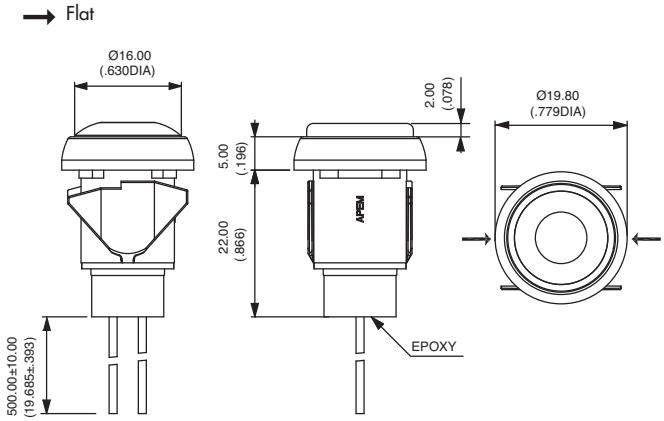

ACTUATOR COLOUR

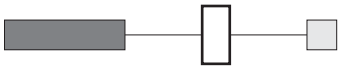

1 : blue - **2** : black - **3** : green - **4** : grey - **5** : yellow - **6** : red - **7** : white - **9** : orange - **A** : satin chrome - **B** : dark blue

BUSHING AND BEZEL FINISH

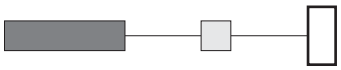

2 : black (standard)

IQ series

Sealed pushbutton switches - bushing Ø 16 mm - snap-in mounting - latching

Square - illuminated

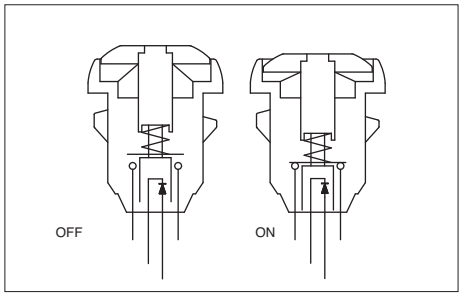

- Four LED colours
- Tin plated LED terminals
- Gold plated contacts

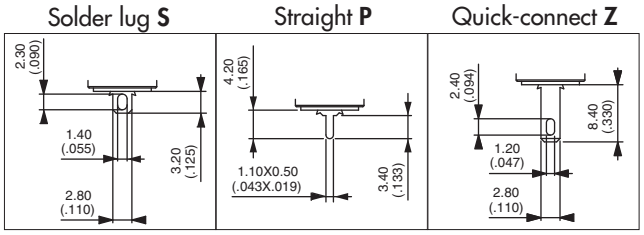

MODEL STRUCTURE

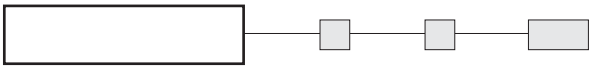

B1

Solder lug terminals

Curved actuator
IQC1S4 OFF - ON

Also available with straight PC terminals : **IQC1P4**
& quick-connect terminals : **IQC1Z4**.

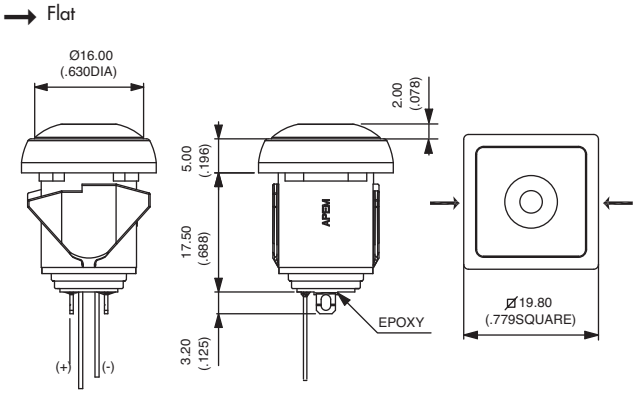

Sealed flying lead terminals

Curved actuator
IQC1F4 OFF - ON

Wire colours : black : contact,
red : LED anode(+), blue : LED cathode (-)

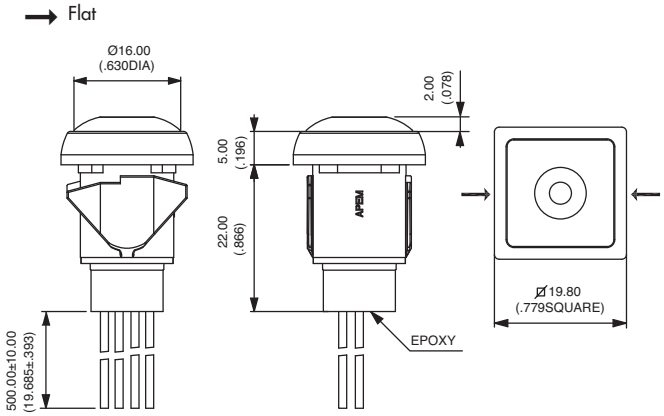

ACTUATOR COLOUR

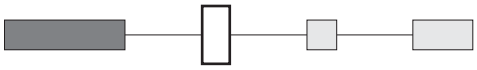

1 : blue - **2** : black - **3** : green - **4** : grey - **5** : yellow - **6** : red - **7** : white - **9** : orange - **A** : satin chrome - **B** : dark blue

BUSHING AND BEZEL FINISH

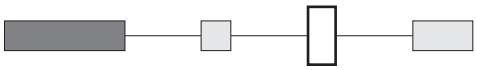

2 : black (standard)

LED COLOUR

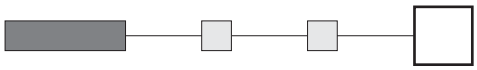

L0S : super red - **L0Y** : yellow - **L0G** : green - **L0B** : blue

Sealed pushbutton switches - bushing Ø 16 mm - snap-in mounting - latching

Square - non-illuminated

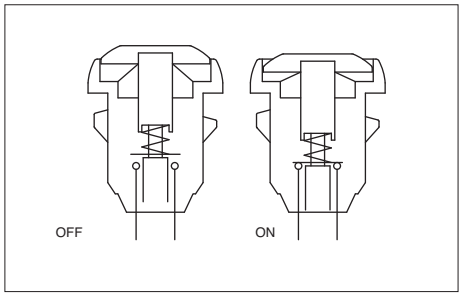

• Gold plated contacts

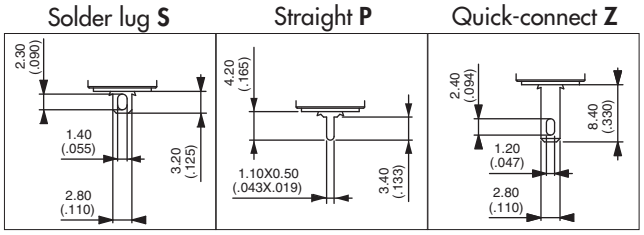

MODEL STRUCTURE

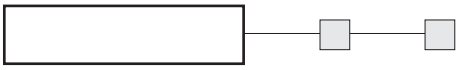

B1

Solder lug terminals

Curved actuator
IQC1S4 OFF - ON

Also available with straight PC terminals : **IQC1P4** & quick-connect terminals : **IQC1Z4**.

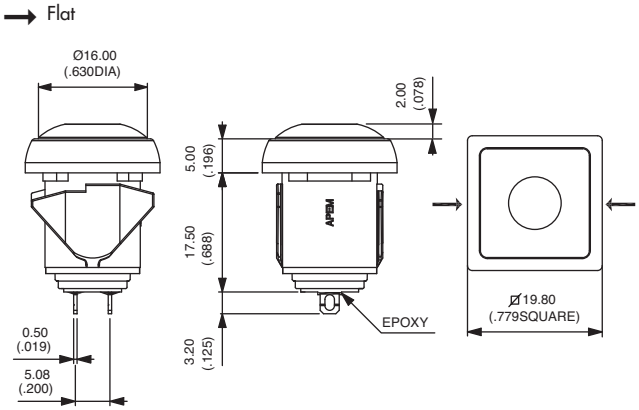

Sealed flying lead terminals

Curved actuator
IQC1F4 OFF - ON

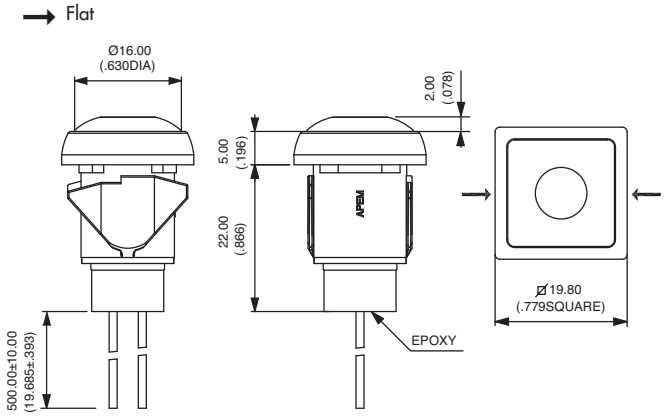

ACTUATOR COLOUR

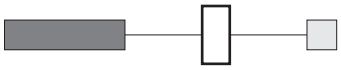

1 : blue - **2** : black - **3** : green - **4** : grey - **5** : yellow - **6** : red - **7** : white - **9** : orange - **A** : satin chrome - **B** : dark blue

BUSHING AND BEZEL FINISH

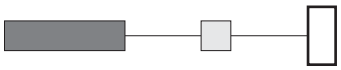

2 : black (standard)

IZ series

Rear mounted sealed pushbutton switches - bushing Ø 16 mm - metal - momentary

Distinctive features and specifications

- ❑ **Rear mounting for easier installation**
- ❑ **Momentary metal models**
- ❑ **Fixed or variable panel thickness**
- ❑ **Screw version available up to 4A**
- ❑ **Sealed to IP67**
- ❑ **Illuminated or non-illuminated**
- ❑ **Flat actuator for optional marking**

B1

ENVIRONMENTAL SPECIFICATIONS

- Front panel sealing : IP67 according to IEC 60529
- Shock resistance : 100 g according to IEC 512-4, test 6c
- Vibration resistance : 10-500Hz - 10 g according to IEC 512-4, test 6d
- Salt spray : IEC 512-6, test 11f
- Operating temperature : -40°C to +85°C

ELECTRICAL SPECIFICATIONS

- Max. current/voltage rating with resistive load :
  - Gold plated silver contacts (code 4) : 200mA 48VDC
  - Silver contacts (code 2) - screw terminals : 4A 48VDC
- Electrical life at full load : 500.000 cycles
- Initial contact resistance : 100 mΩ max.
- Insulation resistance : 1 GΩ min. at 500VDC
- Dielectric strength : 1.000 Vrms 50 Hz

LED COMPONENT SPECIFICATIONS			
LED colour	Forward current	Typ. forward voltage	Max. forward voltage
Super red (L0S)	20mA	2,1V	2,3V
Yellow (L0Y)	20mA	2,1V	2,3V
Green (L0G)	20mA	2,1V	2,3V
Blue (L0B)	20mA	3,2V	3,8V
White (L0W)	20mA	3,35V	4,25V

A resistor must be series-connected by the user.

$$\text{Resistor value} = \frac{\text{supply voltage - LED forward voltage}}{\text{LED forward current}}$$

On flying lead versions, the LED resistor can be integrated by APEM on request.

GENERAL SPECIFICATIONS

- Panel thickness :
  - IZM : 3 mm (.118) max.
  - IZN : 4 mm (.157) max.
- Total travel : 1,8 mm (.070) +/- 0,3 mm
- Typical operating force : 6N +/- 2N
- Low level or mechanical life : 1.000.000 cycles
- Torque : IZN : 1 Nm max.
  IZM : 0,7 Nm max. applied to nut
- Soldering : 320°C max. for 3 sec.

MATERIALS

- Case : thermoplastic UL94-V0
- Plunger : polyamide
- Bushing/bezel : brass, nickel plated
- Contacts :
  4 : silver, gold plated
  2 : silver (screw terminals)
- Multi-wire lead AWG20, section 0,6 mm²
- LED wire : AWG26, section 0,12 mm²
- Lens : polycarbonate
- Terminal seal : epoxy (except screw terminals)

PANEL CUT-OUT

① Flat seal ② O-ring

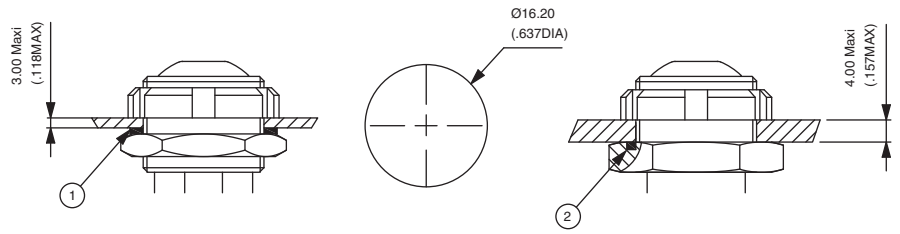

IZM (adjustable hex nut) IZN (fixed hex nut)

MATRIX MOUNTING

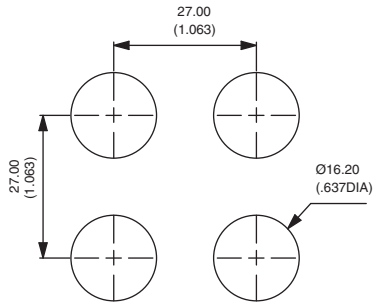

MODEL STRUCTURE

IZ

SERIES

Models

- **M** Metal, **variable** panel thickness
- **N** Metal, **fixed** panel thickness

Actuator shapes

- **R** Round, curved
- **P** Round, flat

Electrical function

- **3** Normally open (NO)

Terminals

- **S** Solder lugs
- **F** Flying leads
- **P** Straight PC
- **Z** Quick-connect (non-illuminated)
- **V** Screw (non-illuminated & N model only)

Contacts

- **4** Silver, gold plated
- **2** Silver (screw term.)

OPTIONS

Actuator colours

- **1** Blue
- **B** Dark blue
- **2** Black
- **3** Green
- **4** Grey
- **5** Yellow
- **6** Red
- **7** White
- **8** Bright chrome
- **9** Orange
- **A** Satin chrome

Bushing & bezel finish

- **N** Nickel plated

Other : on request.

LED colours

- **Blank** Non-illum.
- **L0S** Super red
- **L0Y** Yellow
- **L0G** Green
- **L0B** Blue
- **L0W** White

ABOUT THIS SERIES

On the following pages, you will find successively :
model structure of switches and options in the same order as in above chart

Dimensions : first dimensions are in mm while inches are shown as bracketed numbers.

NOTICE : please note that not all combinations of above numbers are available.
Refer to the following pages for further information.

Mounting accessories : Standard hardware supplied :
- IZM : 1 castellated nickel plated brass nut U6915 + 1 silicone flat seal + 1 hex nut 19 mm (.748) across flats U4116.
- IZN : 1 castellated nickel plated brass nut U6915 + 1 O-ring

Packaging unit : 25 pieces for flying lead models - 40 pieces for other models

The company reserves the right to change specifications without notice.

IZ series

Rear mounted sealed pushbutton switches - bushing Ø 16 mm - metal - momentary

For variable panel thickness : IZM

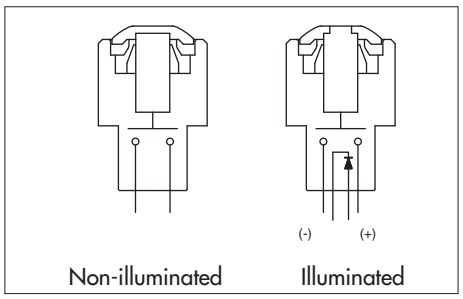

- Five LED colours
- Tin plated LED terminals
- Gold plated contacts

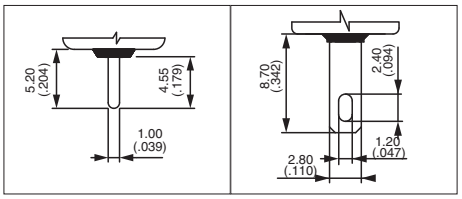

MODEL STRUCTURE

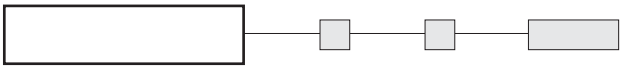

Actuator marking available on IZMP models (symbol 10 mm max.). On request.

B1

Illuminated - solder lug terminals

Curved actuator **IZMR3S4** — Normally Open

Flat actuator **IZMP3S4** — Normally Open

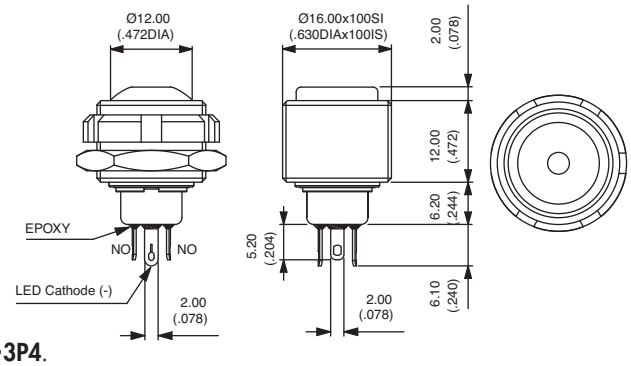

Also available with straight PC terminals : **IZM•3P4**.
LED colour is indicated by the bottom of the switch.

Illuminated - flying lead terminals

Curved actuator **IZMR3F4** — Normally Open

Flat actuator **IZMP3F4** — Normally Open

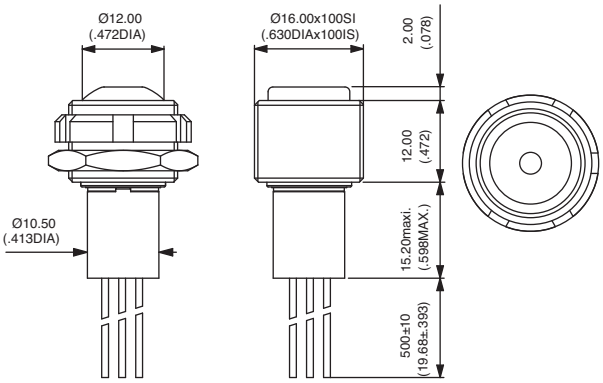

Wire colours : black : NO contact,
red : LED anode (+), blue : LED cathode (-)

Non-illuminated - solder lug terminals

Curved actuator **IZMR3S4** — Normally Open

Flat actuator **IZMP3S4** — Normally Open

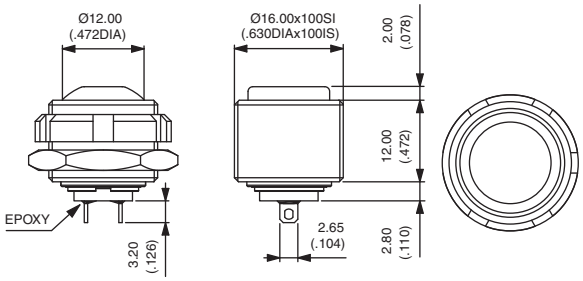

Also available with straight PC terminals :
IZM•3P4 and quick-connect terminals : **IZM•3Z4**.

For non-illuminated FLYING LEAD versions, refer to illuminated models above. Non-illuminated have 2 wires only.

IZ series

Rear mounted sealed pushbutton switches - bushing Ø 16 mm - metal - momentary

For fixed panel thickness : IZN

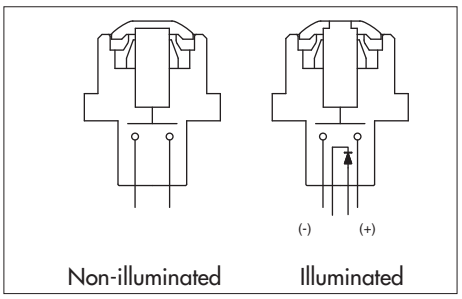

- Five LED colours
- Tin plated LED terminals

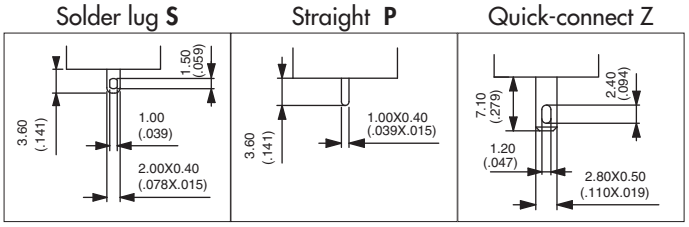

MODEL STRUCTURE

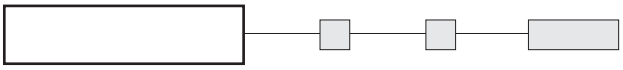

Actuator marking available on IZNP models (symbol 10 mm max.). On request.

B1

Illuminated - solder lug terminals

GOLD PLATED CONTACTS

Curved actuator **IZNR3S4** Normally Open

Flat actuator **IZNP3S4** Normally Open

Also available with straight PC terminals : **IZN•3P4**.
LED colour is indicated by the bottom of the switch.

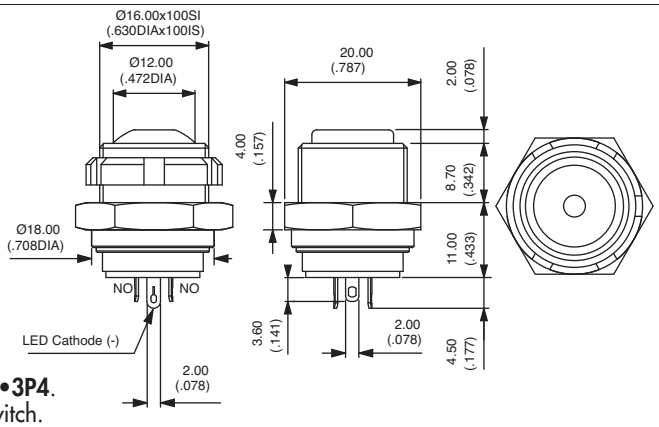

Illuminated - sealed flying lead terminals

GOLD PLATED CONTACTS

Curved actuator **IZNR3F4** Normally Open

Flat actuator **IZNP3F4** Normally Open

Wire colours : black : NO contact,
red : LED anode (+), blue : LED cathode (-)

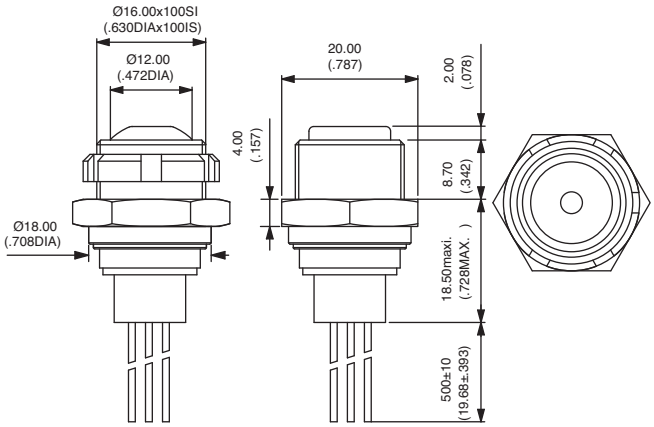

Non-illuminated - solder lug terminals

GOLD PLATED CONTACTS

Curved actuator **IZNR3S4** Normally Open

Flat actuator **IZNP3S4** Normally Open

Also available with straight PC terminals :
IZN•3P4 and quick-connect terminals : **IZN•3Z4**.

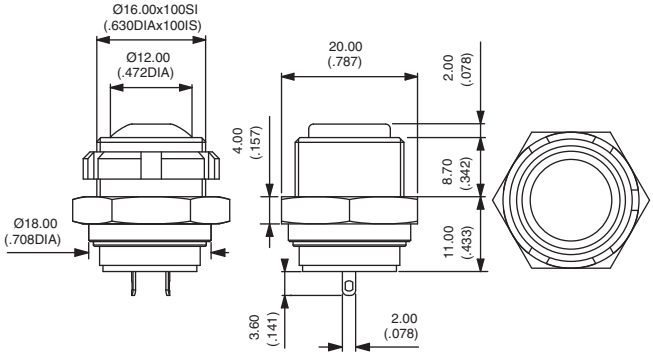

For non-illuminated FLYING LEAD versions, refer to illuminated models above. Non-illuminated have 2 wires only.

IZ series

Rear mounted sealed pushbutton switches - bushing Ø 16 mm - metal - momentary

For fixed panel thickness : IZN - options

Non-illuminated - screw terminals

SILVER CONTACTS

Curved actuator
IZNR3V2 — Normally open

Flat actuator
IZNP3V2 — Normally open

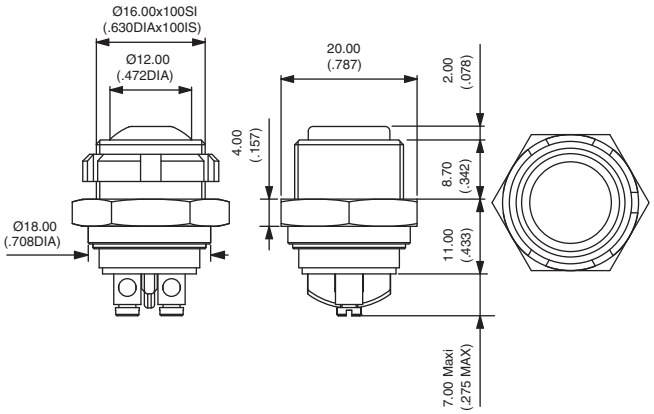

B1

ACTUATOR COLOURS

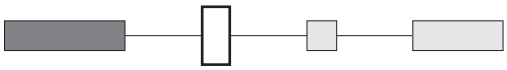

1 : blue - **B** : dark blue - **2** : black - **3** : green - **4** : grey - **5** : yellow - **6** : red - **7** : white - **8** : bright chrome - **9** : orange
A : satin chrome

BUSHING AND BEZEL COLOURS

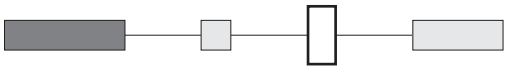

N : nickel plated (standard)
Other : on request.

LED COLOURS

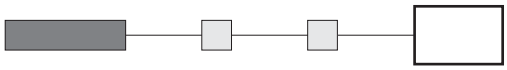

Blank : non-illuminated
L0S : super red - **L0Y** : yellow - **L0G** : green
L0B : blue - **L0W** : white

IZ series

Rear mounted sealed pushbutton switches - bushing Ø 16 mm - metal - latching

Distinctive features and specifications

- ❑ **Rear mounting for easier installation**
- ❑ **Latching action metal models**
- ❑ **Fixed or variable panel thickness**
- ❑ **Sealed to IP67**
- ❑ **Illuminated or non-illuminated**
- ❑ **Flat actuator for optional marking**

B1

ENVIRONMENTAL SPECIFICATIONS

- Front panel sealing : IP67 according to IEC 60529
- Shock resistance : 100 g according to IEC 512-4, test 6c
- Vibration resistance : 10-500Hz - 10 g according to IEC 512-4, test 6d
- Salt spray : IEC 512-6, test 11f
- Robustness (non-illuminated) : IK06 according to EN 50102 (1 joule)
- Operating temperature : -40°C to +85°C

ELECTRICAL SPECIFICATIONS

- Max. current/voltage rating with resistive load : 100mA 24VDC - 200.000 cycles
- Initial contact resistance : 100 mΩ max.
- Insulation resistance : 1 GΩ min. at 500VDC
- Dielectric strength : 1.500 Vrms between terminals
  1.000 Vrms between terminals and frame

LED COMPONENT SPECIFICATIONS			
LED colour	Forward current	Typ. forward voltage	Max. forward voltage
Super red (L0S)	20mA	1,95V	1,95V
Yellow (L0Y)	20mA	2V	2,05V
Green (L0G)	20mA	2,1V	2,5V
Blue (L0B)	20mA	3,2V	4V

A resistor must be series-connected by the user.

$$\text{Resistor value} = \frac{\text{supply voltage - LED forward voltage}}{\text{LED forward current}}$$

On flying lead versions, the LED resistor can be integrated by APEM on request.

GENERAL SPECIFICATIONS

- Panel thickness :
  - IZM : 3 mm (.118) max.
  - IZN : 4 mm (.157) max.
- Total travel : 2,5 mm (.098) +/-0,3 mm
- Typical operating force : 5N +/- 2N
- Low level or mechanical life : 200.000 cycles
- Torque : IZN : 1 Nm max.
  IZM : 0,7 Nm max. applied to nut
- Soldering : 320°C max. for 3 sec.

MATERIALS

- Case : thermoplastic UL94-V0
- Plunger : polyamide
- Bushing/bezel : brass, nickel plated
- Contacts : silver, gold plated
- Multi-wire lead AWG20, section 0,6 mm²
- LED wire : AWG26, section 0,12 mm²
- Lens : polycarbonate
- Terminal seal : epoxy

PANEL CUT-OUT

① Flat seal ② O-ring

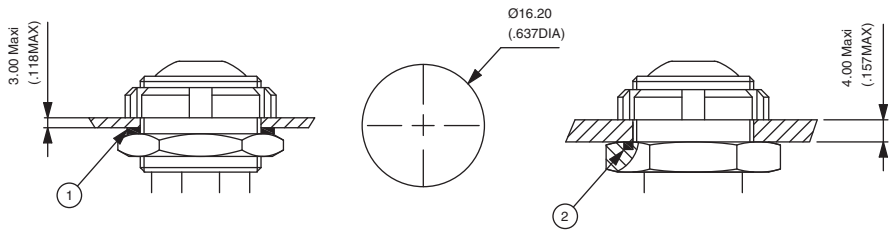

IZM (adjustable hex nut) IZN (fixed hex nut)

MATRIX MOUNTING

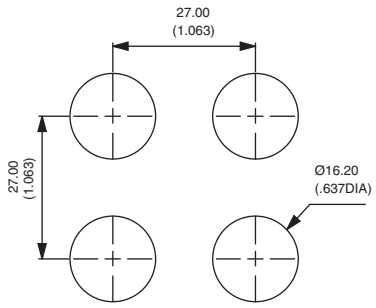

The company reserves the right to change specifications without notice.

IZ series

Rear mounted sealed pushbutton switches - bushing Ø 16 mm - metal - latching

Overview

MODEL STRUCTURE

IZ					
SERIES	Models	Actuator shapes	Electrical function	Terminals	Contacts

Models

- **M** Metal, **variable** panel thickness
- **N** Metal, **fixed** panel thickness

Actuator shapes

- **R** Round, curved
- **P** Round, flat

Electrical function

- **1** OFF - ON

Terminals

- **S** Solder lugs
- **F** Flying leads
- **P** Straight PC
- **Z** Quick-connect

Contacts

- **4** Silver, gold plated

B1

OPTIONS

Actuator colours

- **1** Blue
- **B** Dark blue
- **2** Black
- **3** Green
- **4** Grey
- **5** Yellow
- **6** Red
- **7** White
- **8** Bright chrome
- **9** Orange
- **A** Satin chrome

Bushing & bezel finish

- **N** Nickel plated (standard)

Other : on request.

LED colours

- **Blank** Non-illum.
- **L0S** Super red
- **L0Y** Yellow
- **L0G** Green
- **L0B** Blue

ABOUT THIS SERIES

On the following pages, you will find successively :
model structure of switches and options in the same order as in above chart

Dimensions : first dimensions are in mm while inches are shown as bracketed numbers.

NOTICE : please note that not all combinations of above numbers are available.
Refer to the following pages for further information.

Mounting accessories : Standard hardware supplied :
- IZN : 1 castellated nickel plated brass nut U6915 + 1 O-ring
- IZM : 1 castellated nickel plated brass nut U6915 + 1 silicone flat seal + 1 hex nut 19 mm (.748) across flats U4116.

Packaging unit : 25 pieces for flying lead models - 40 pieces for other models

IZ series

Rear mounted sealed pushbutton switches - bushing Ø 16 mm - metal - latching

For variable panel thickness : IZM

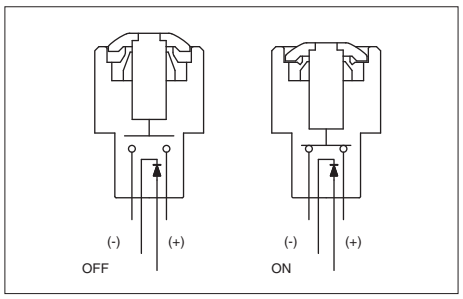

- Four LED colours
- Tin plated LED terminals
- Gold plated contacts

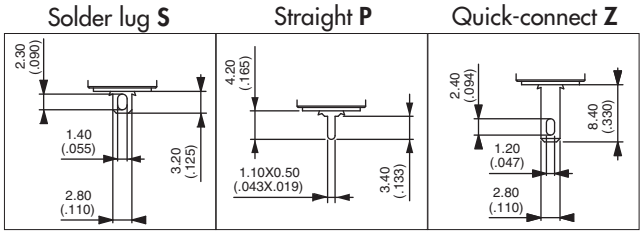

MODEL STRUCTURE

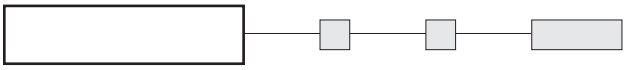

Actuator marking available on IZMP models (symbol 10 mm max.). On request.

B1

Illuminated - solder lug terminals

Curved actuator
IZMR1S4 OFF - ON

Flat actuator
IZMP1S4 OFF - ON

Also available with straight PC terminals :
IZM•1P4 & quick-connect terminals : **IZM•1Z4**.

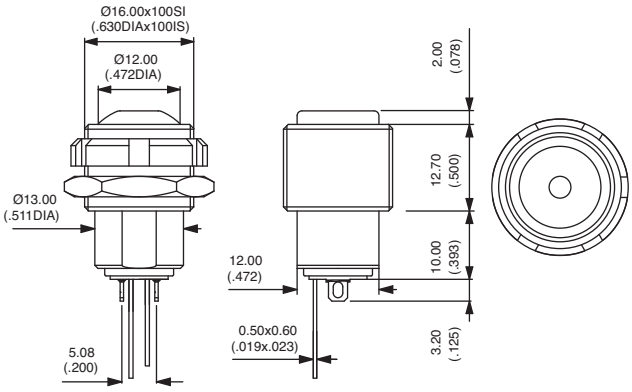

Illuminated - flying lead terminals

Curved actuator
IZMR1F4 OFF - ON

Flat actuator
IZMP1F4 OFF - ON

Wire colours : black : contact,
red : LED anode(+), blue : LED cathode (-)

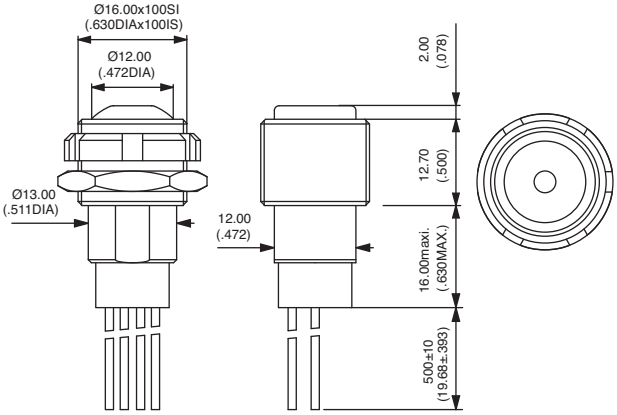

Non-illuminated - solder lug terminals

Curved actuator
IZMR1S4 OFF - ON

Flat actuator
IZMP1S4 OFF - ON

Also available with straight PC terminals :
IZM•1P4 & quick-connect terminals : **IZM•1Z4**.

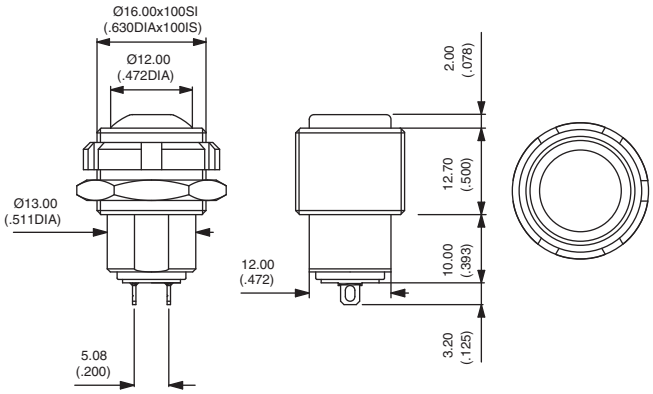

For non-illuminated FLYING LEAD versions, refer to illuminated models above. Non-illuminated have 2 wires only.

IZ series

Rear mounted sealed pushbutton switches - bushing Ø 16 mm - metal - latching

For fixed panel thickness : IZN

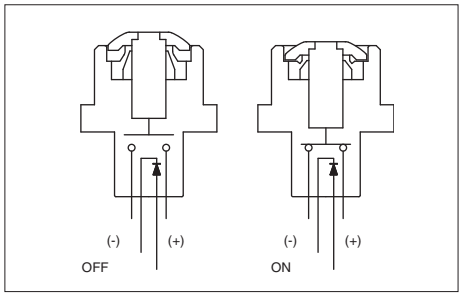

- Four LED colours
- Tin plated LED terminals
- Gold plated contacts

Solder lug **S** | Straight **P** | Quick-connect **Z**

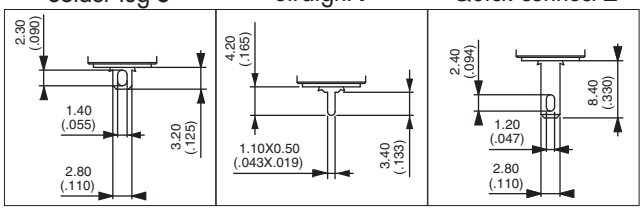

MODEL STRUCTURE

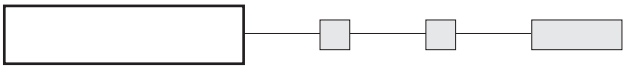

Actuator marking available on IZNP models (symbol 10 mm max.). On request.

B1

Illuminated - solder lug terminals

Curved actuator
IZNR1S4 OFF - ON

Flat actuator
IZNP1S4 OFF - ON

Also available with straight PC terminals :
IZN•1P4 & quick-connect terminals : **IZN•1Z4**.

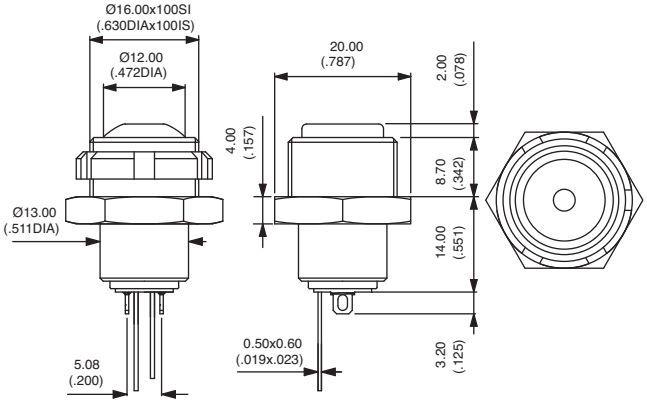

Illuminated - flying lead terminals

Curved actuator
IZNR1F4 OFF - ON

Flat actuator
IZNP1F4 OFF - ON

Wire colours : black : contact,
red : LED anode(+), blue : LED cathode (-)

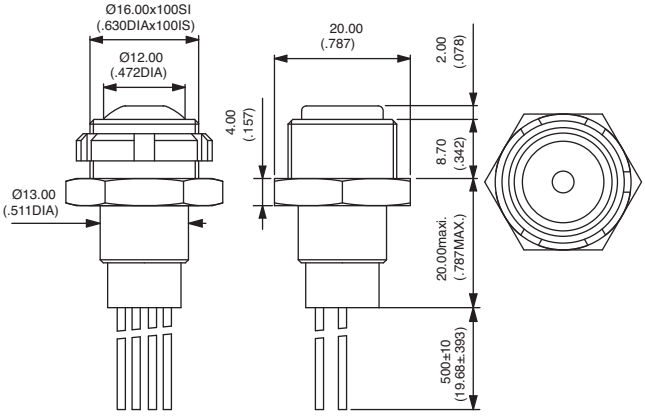

Non-illuminated - solder lug terminals

Curved actuator
IZNR1S4 OFF - ON

Flat actuator
IZNP1S4 OFF - ON

Also available with straight PC terminals :
IZN•1P4 & quick-connect terminals : **IZN•1Z4**.

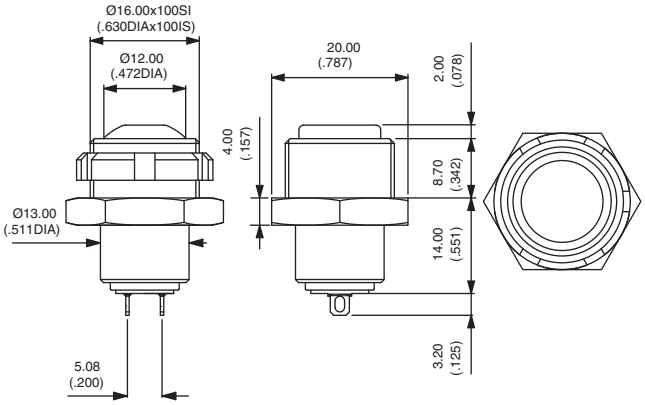

For non-illuminated FLYING LEAD versions, refer to illuminated models above. Non-illuminated have 2 wires only.

ACTUATOR COLOURS

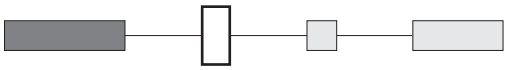

1 : blue - **B** : dark blue - **2** : black - **3** : green - **4** : grey - **5** : yellow - **6** : red - **7** : white - **8** : bright chrome - **9** : orange
A : satin chrome

BUSHING AND BEZEL COLOURS

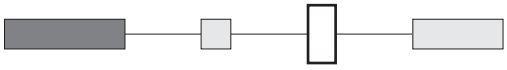

N : nickel plated (standard)
Other : on request.

LED COLOURS

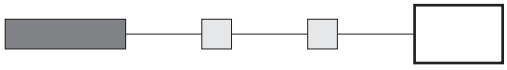

Blank : non-illuminated
L0S : super red - **L0Y** : yellow - **L0G** : green
L0B : blue

IZ series

Rear mounted sealed pushbutton switches - bushing Ø 16 mm - momentary

Distinctive features and specifications

- ❑ **Rear mounting for easier installation**
- ❑ **Momentary models**
- ❑ **Screw version available up to 4A**
- ❑ **Sealed to IP67**
- ❑ **Illuminated or non-illuminated**
- ❑ **Flat actuator for optional marking**

B1

ENVIRONMENTAL SPECIFICATIONS

- Front panel sealing : IP67 according to IEC 60529
- Shock resistance : 100 g according to IEC 512-4, test 6c
- Vibration resistance : 10-500Hz - 10 g according to IEC 512-4, test 6d
- Salt spray : IEC 512-6, test 11f
- Operating temperature : -40°C to +85°C

ELECTRICAL SPECIFICATIONS

- Max. current/voltage rating with resistive load :
  - Gold plated silver contacts (code 4) : 200mA 48VDC
  - Silver contacts (code 2) - screw terminals : 4A 48VDC
- Electrical life at full load : 500.000 cycles
- Initial contact resistance : 100 mΩ max.
- Insulation resistance : 1 GΩ min. at 500VDC
- Dielectric strength : 1.000 Vrms 50 Hz

LED COMPONENT SPECIFICATIONS

LED colour	Forward current	Typ. forward voltage	Max. forward voltage
Super red (L0S)	20mA	2,1V	2,3V
Yellow (L0Y)	20mA	2,1V	2,3V
Green (L0G)	20mA	2,1V	2,3V
Blue (L0B)	20mA	3,2V	3,8V
White (L0W)	20mA	3,35V	4,25V

A resistor must be series-connected by the user.

$$\text{Resistor value} = \frac{\text{supply voltage - LED forward voltage}}{\text{LED forward current}}$$

On flying lead versions, the LED resistor can be integrated by APEM on request.

GENERAL SPECIFICATIONS

- Panel thickness : 3 mm (.118) max.
- Total travel : 1,8 mm (.070) +/- 0,3 mm
- Typical operating force : 6N +/- 2N
- Low level or mechanical life : 1.000.000 cycles
- Torque : 0,7 Nm max. applied to nut
- Soldering : 320°C max. for 3 sec.

MATERIALS

- Case : thermoplastic UL94-V0
- Plunger : polyamide
- Bushing/bezel : polyamide
- Contacts :
  4 : silver, gold plated
  2 : silver (screw terminals)
- Multi-wire lead AWG20, section 0,6 mm²
- LED wire : AWG26, section 0,12 mm²
- Lens : polycarbonate
- Terminal seal : epoxy (except screw terminals)

PANEL CUT-OUT

① Flat seal

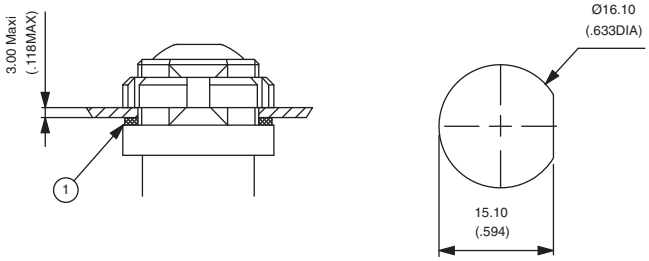

MATRIX MOUNTING

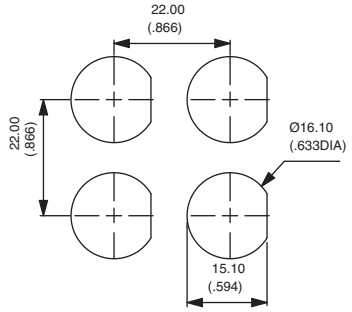

The company reserves the right to change specifications without notice.

MODEL STRUCTURE

IZ

SERIES

Model

P	Thermoplastic

Actuator shapes

R	Round, curved
P	Round, flat

Electrical function

3	Normally open (NO)

Terminals

S	Solder lugs
F	Flying leads
P	Straight PC
Z	Quick-connect (non-illuminated)
V	Screw (non-illuminated)

Contacts

4	Silver, gold plated
2	Silver (screw term.)

OPTIONS

Actuator colours

1	Blue
B	Dark blue
2	Black
3	Green
4	Grey
5	Yellow
6	Red
7	White
8	Bright chrome
9	Orange
A	Satin chrome

Bushing & bezel finish

2	Black (standard)

Other : on request.

LED colours

Blank	Non-illum.
L0S	Super red
L0Y	Yellow
L0G	Green
L0B	Blue
L0W	White

ABOUT THIS SERIES
On the following pages, you will find successively :
model structure of switches and options in the same order as in above chart

Dimensions : first dimensions are in mm while inches are shown as bracketed numbers.

NOTICE : please note that not all combinations of above numbers are available.
Refer to the following pages for further information.

Mounting accessories : Standard hardware supplied : 1 castellated black plastic nut U4249 and 1 silicone flat seal.

Packaging unit : 25 pieces for flying lead models - 40 pieces for other models

IZ series

Rear mounted sealed pushbutton switches - bushing Ø 16 mm - momentary

Illuminated

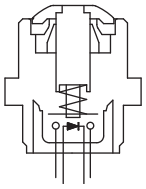

Function 3 (NO)

- Five LED colours
- Tin plated LED terminals
- Gold plated contacts

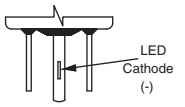

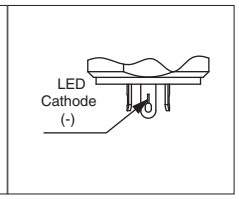

B1

MODEL STRUCTURE

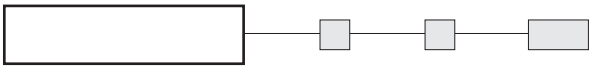

Actuator marking available on IZPP models (symbol 10 mm max.). On request.

Solder lug terminals

Curved actuator **IZPR3S4** Normally Open

Flat actuator **IZPP3S4** Normally Open

Also available with straight PC terminals : **IZP•3P4**.
LED colour is indicated by the bottom of the switch.

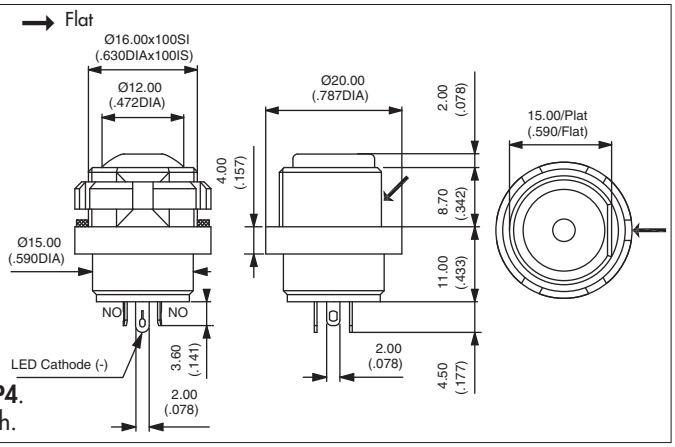

Flying lead terminals - momentary

Curved actuator **IZPR3F4** Normally Open

Flat actuator **IZPP3F4** Normally Open

Wire colours : black : NO contact,
red : LED anode(+), blue : LED cathode (-)

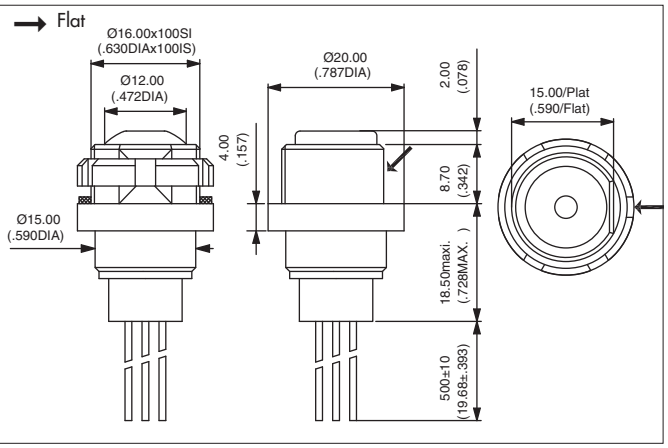

ACTUATOR COLOURS

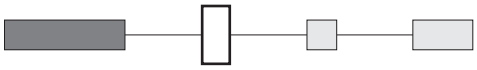

1 : blue - **B** : dark blue - **2** : black - **3** : green - **4** : grey - **5** : yellow - **6** : red - **7** : white - **8** : bright chrome - **9** : orange
A : satin chrome

BUSHING AND BEZEL COLOURS

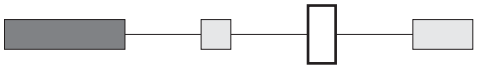

2 : black (standard)
Other : on request.

LED COLOURS

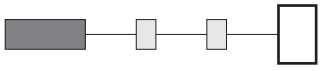

L0S : super red - **L0Y** : yellow - **L0G** : green
L0B : blue - **L0W** : white

Rear mounted sealed pushbutton switches - bushing Ø 16 mm - momentary

Non-illuminated

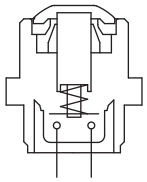

Function 3 (NO)

Solder lug **S**

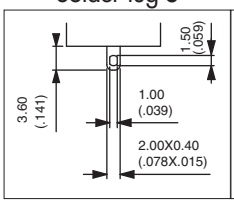

Straight **P**

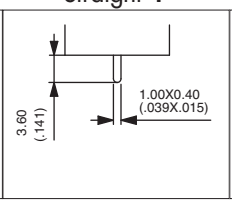

Quick-connect Z

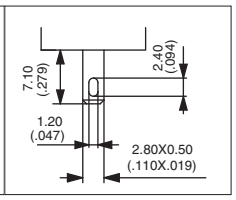

MODEL STRUCTURE

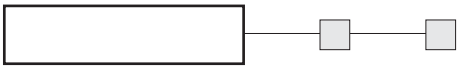

Actuator marking available on IZPP models (symbol 10 mm max.). On request.

B1

Solder lug terminals - gold plated contacts

Curved actuator
IZPR3S4 Normally Open

Flat actuator
IZPP3S4 Normally Open

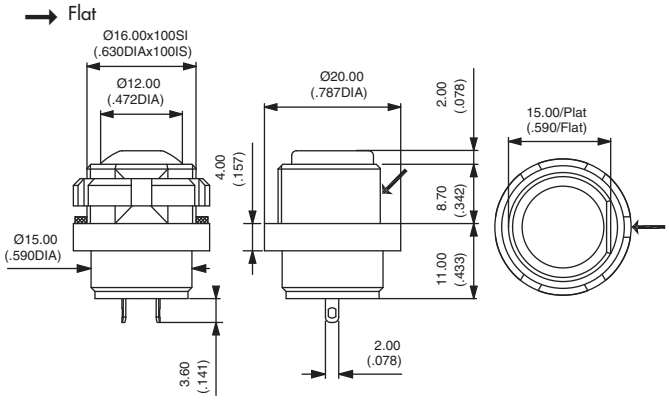

Also available with straight PC terminals :
IZP•3P4 and quick-connect terminals : **IZP•3Z4**.

Sealed flying lead terminals - gold plated contacts

Curved actuator
IZPR3F4 Normally Open

Flat actuator
IZPP3F4 Normally Open

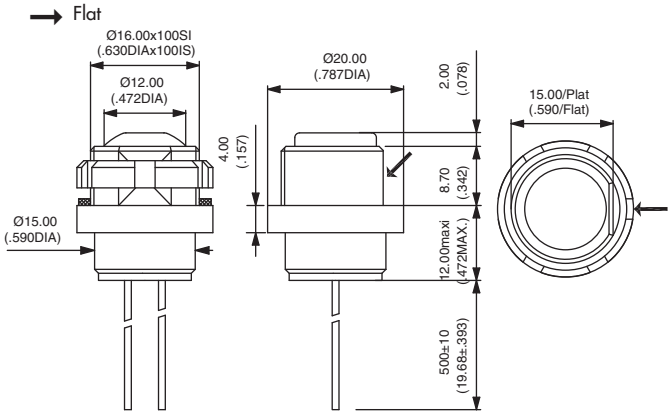

Screw terminals - silver contacts

Curved actuator
IZPR3V2 Normally open

Flat actuator
IZPP3V2 Normally open

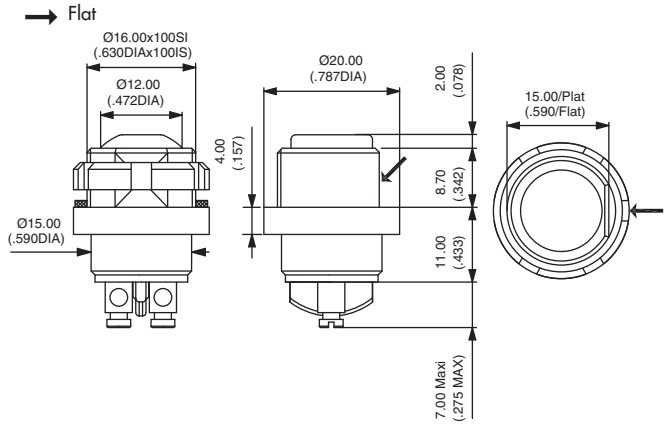

Actuator colour and bushing/bezel colour : select the desired codes on previous page.

IZ series

Rear mounted sealed pushbutton switches - bushing Ø 16 mm - latching

Distinctive features and specifications

- ❑ **Rear mounting for easier installation**
- ❑ **Latching action models**
- ❑ **Sealed to IP67**
- ❑ **Illuminated or non-illuminated**
- ❑ **Flat actuator for optional marking**

B1

ENVIRONMENTAL SPECIFICATIONS

- Front panel sealing : IP67 according to IEC 60529
- Shock resistance : 100 g according to IEC 512-4, test 6c
- Vibration resistance : 10-500Hz - 10 g according to IEC 512-4, test 6d
- Salt spray : IEC 512-6, test 11f
- Operating temperature : -40°C to +85°C

ELECTRICAL SPECIFICATIONS

- Max. current/voltage rating with resistive load : 100mA 24VDC - 200.000 cycles
- Initial contact resistance : 100 mΩ max.
- Insulation resistance : 1 GΩ min. at 500VDC
- Dielectric strength : 1.500 Vrms between terminals

LED COMPONENT SPECIFICATIONS			
LED colour	Forward current	Typ. forward voltage	Max. forward voltage
Super red (L0S)	20mA	1,95V	1,95V
Yellow (L0Y)	20mA	2V	2,05V
Green (L0G)	20mA	2,1V	2,5V
Blue (L0B)	20mA	3,2V	4V

A resistor must be series-connected by the user.

$$\text{Resistor value} = \frac{\text{supply voltage - LED forward voltage}}{\text{LED forward current}}$$

On flying lead versions, the LED resistor can be integrated by APEM on request.

GENERAL SPECIFICATIONS

- Panel thickness : 3 mm (.118) max.
- Total travel : 2,5 mm (.098) +/- 0,3 mm
- Typical operating force : 5N +/- 2N
- Low level or mechanical life : 200.000 cycles
- Torque : 0,7 Nm max. applied to nut
- Soldering : 320°C max. for 3 sec.

MATERIALS

- Case : thermoplastic UL94-V0
- Plunger : polyamide
- Bushing/bezel : polyamide
- Contacts : silver, gold plated
- Multi-wire lead AWG20, section 0,6 mm²
- LED wire : AWG26, section 0,12 mm²
- Lens : polycarbonate
- Terminal seal : epoxy

PANEL CUT-OUT

① Flat seal

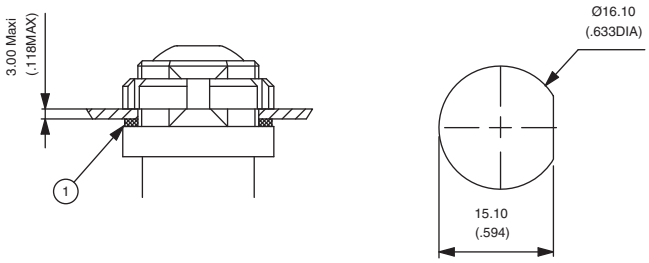

MATRIX MOUNTING

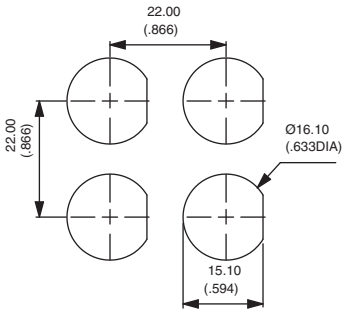

The company reserves the right to change specifications without notice.

IZ series

Rear mounted sealed pushbutton switches - bushing Ø 16 mm - latching

Distinctive features and specifications

MODEL STRUCTURE

IZ					

SERIES

Model

P	Thermoplastic

Actuator shapes

R	Round, curved
P	Round, flat

Electrical function

1	ON - OFF

Terminals

S	Solder lugs
F	Flying leads
P	Straight PC
Z	Quick-connect

Contacts

4	Silver, gold plated

OPTIONS

Actuator colours

1	Blue
B	Dark blue
2	Black
3	Green
4	Grey
5	Yellow
6	Red
7	White
8	Bright chrome
9	Orange
A	Satin chrome

Bushing & bezel finish

2	Black (standard)

Other : on request.

LED colours

Blank	Non-illum.
L0S	Super red
L0Y	Yellow
L0G	Green
L0B	Blue

ABOUT THIS SERIES

On the following pages, you will find successively :
model structure of switches and options in the same order as in above chart

Dimensions : first dimensions are in mm while inches are shown as bracketed numbers.

NOTICE : please note that not all combinations of above numbers are available.
Refer to the following pages for further information.

Mounting accessories : Standard hardware supplied : 1 castellated black plastic nut U4249 and 1 silicone flat seal.

Packaging unit : 25 pieces for flying lead models - 40 pieces for other models

IZ series

Rear mounted sealed pushbutton switches - bushing Ø 16 mm - latching

Illuminated

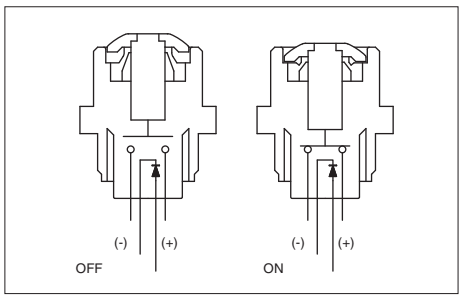

- Four LED colours
- Tin plated LED terminals
- Gold plated contacts

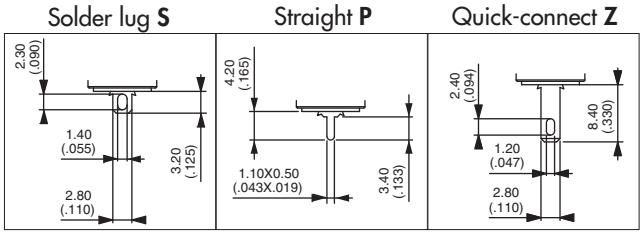

MODEL STRUCTURE

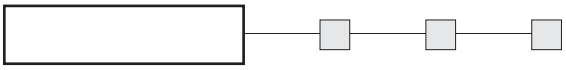

Actuator marking available on IZPP models (symbol 10 mm max.). On request.

B1

Solder lug terminals

Curved actuator
IZPR1S4 ON - OFF

Flat actuator
IZPP1S4 ON - OFF

Also available with straight PC terminals : **IZP•1P4** and quick-connect terminals : **IZP•1Z4**.

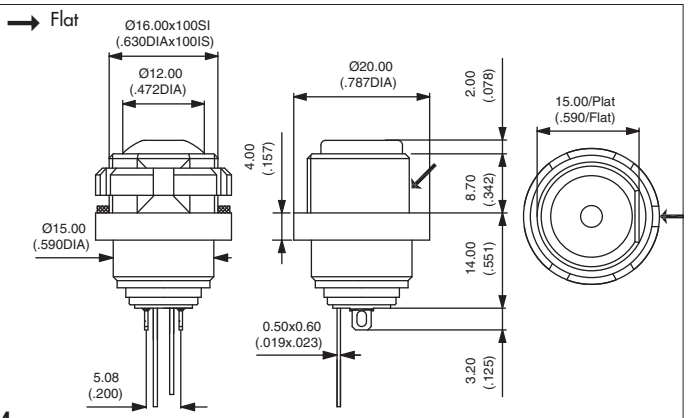

Sealed flying lead terminals

Curved actuator
IZPR1F4 ON - OFF

Flat actuator
IZPP1F4 ON - OFF

Wire colours : black : NO contact,
red : LED anode(+), blue : LED cathode (-)

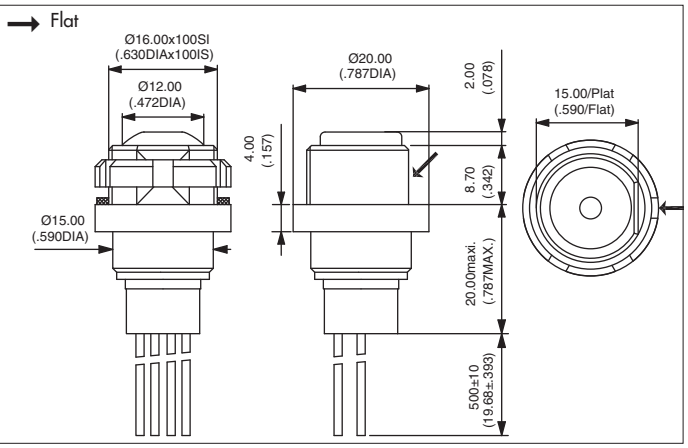

ACTUATOR COLOURS

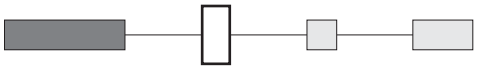

1 : blue - **B** : dark blue - **2** : black - **3** : green - **4** : grey - **5** : yellow - **6** : red - **7** : white - **8** : bright chrome - **9** : orange
A : satin chrome

BUSHING AND BEZEL COLOURS

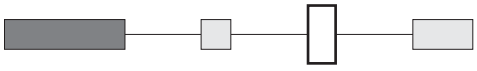

2 : black (standard)
Other : on request.

LED COLOURS

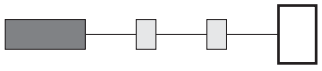

L0S : super red - **L0Y** : yellow - **L0G** : green
L0B : blue

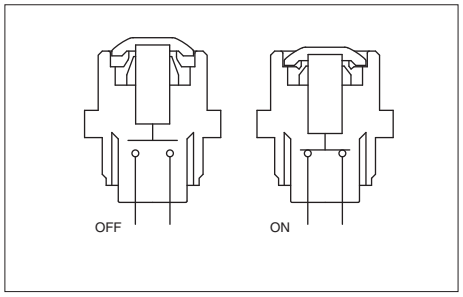

- Gold plated contacts

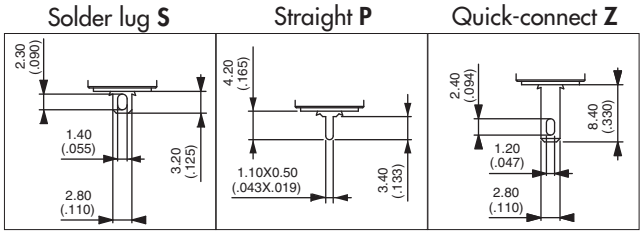

MODEL STRUCTURE

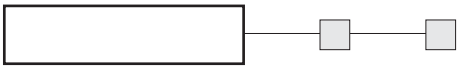

Actuator marking available on IZPP models (symbol 10 mm max.). On request.

B1

Solder lug terminals

Curved actuator
IZPR1S4 ON - OFF

Flat actuator
IZPP1S4 ON - OFF

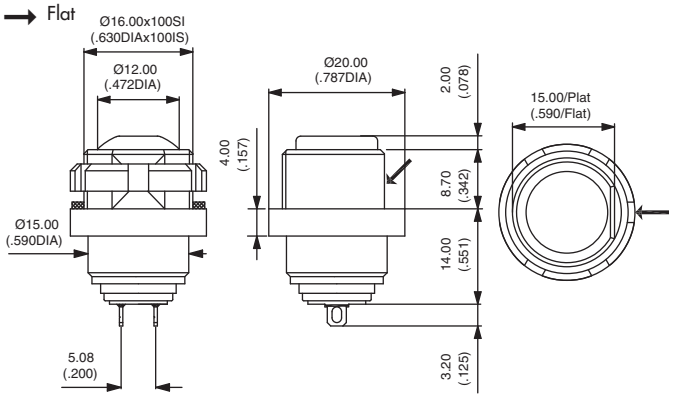

Also available with straight PC terminals : **IZP•1P4** and quick-connect terminals : **IZP•1Z4**.

Sealed flying lead terminals

Curved actuator
IZPR1F4 ON - OFF

Flat actuator
IZPP1F4 ON - OFF

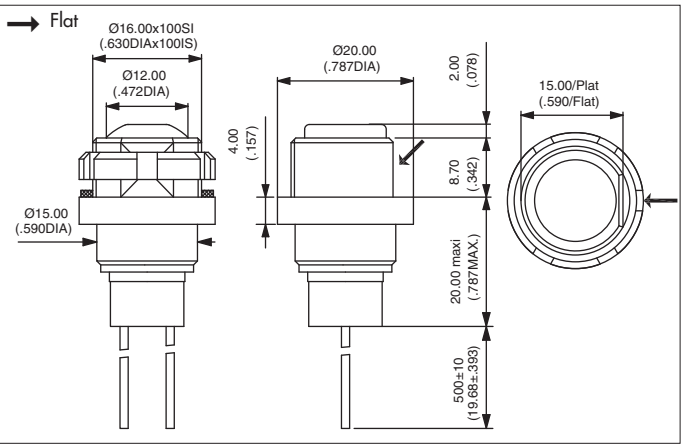

ACTUATOR COLOURS

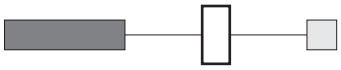

1 : blue - **B** : dark blue - **2** : black - **3** : green - **4** : grey - **5** : yellow - **6** : red - **7** : white - **8** : bright chrome - **9** : orange
A : satin chrome

BUSHING AND BEZEL COLOURS

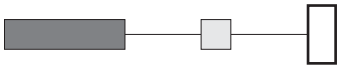

2 : black (standard)
Other : on request.

IR series

Sealed pushbutton switches - bushing Ø 16 mm - momentary

Distinctive features

The IR series is a range of sealed momentary pushbutton switches with dia. 16 mm bushing. This series is divided into 2 families : standard models and microswitch technology models.

Common features

- **Sealed to IP67**
- **Illuminated or non-illuminated**
- **Tactile feedback**
- **Square or round actuator**
- **Wide choice of bezel and actuator colours**
- **Wide choice of illumination colours**

B1

Standard versions

- Numerous terminal options : solder, flying lead, straight PC, quick-connect, screw
- Screw versions withstanding up to 4A
- Electrical function : NO (2 terminals)

NO - Screw terminals

NO - Illuminated Flying lead terminals

NO - Solder lug terminals

Microswitch versions

- Withstanding up to 5A
- Two electrical functions :
  NC+NO (3 terminals)
  NC/NO combined (4 terminals)

NC+NO - 3 terminals

NC/NO - 4 terminals - Illuminated

Optional marking

Actuator marking is available on request for models with flat round actuator.

Standard version

Microswitch version

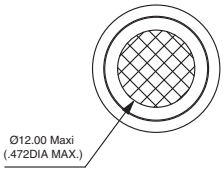

Integrated resistor

On wire lead illuminated versions, the LED resistor can be integrated in the product by APEM. On request.

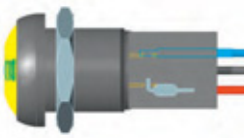

The company reserves the right to change specifications without notice.

IR series

Sealed pushbutton switches - bushing Ø 16 mm - momentary - standard version

Distinctive features and specifications

- ❑ **Screw version up to 4A**
- ❑ **Tactile feedback**
- ❑ **Sealed to IP67**
- ❑ **Illuminated or non-illuminated**
  New : illuminated round bezel now available !
- ❑ **Flat round actuator for optional marking**

B1

ENVIRONMENTAL SPECIFICATIONS

- Front panel sealing : IP67 according to IEC 60529
- Shock resistance : 100 g according to IEC 512-4, test 6c
- Vibration resistance : 10-500Hz - 10 g according to IEC 512-4, test 6d
- Salt spray : IEC 512-6, test 11f
- Operating temperature : -40°C to +85°C

GENERAL SPECIFICATIONS

- Panel thickness : 8 mm (.314) max.
- Total travel : 1,6 mm (.062) +/- 0,3 mm
- Typical operating force : 4N +/- 2N
- Low level or mechanical life : 1.000.000 cycles
- Torque : 0,8 Nm max. applied to nut
- Soldering : 320°C max. for 3 sec.

ELECTRICAL SPECIFICATIONS

- Max. current/voltage rating with resistive load :
  - Gold plated contacts :
    Code 4 : 200mA 48VDC, 500.000 cycles
    Code 7 : 5A 28VDC, 70.000 cycles
  - Silver contacts (code 2) - screw terminals : 4A 48VDC, 500.000 cycles
- Initial contact resistance : 100 mΩ max.
- Insulation resistance : 1 GΩ min. at 500VDC
- Dielectric strength : 1.500 Vrms

LED COMPONENT SPECIFICATIONS

LED colour	Forward current	Typ. forward voltage	Max. forward voltage
Super red (0S)	20mA	2,1V	2,3V
Yellow (0Y)	20mA	2,1V	2,3V
Green (0G)	20mA	2,1V	2,3V
Blue (0B)	20mA	3,2V	3,8V
White (0W)	20mA	3,35V	4,25V

A resistor must be series-connected by the user.

$$\text{Resistor value} = \frac{\text{supply voltage - LED forward voltage}}{\text{LED forward current}}$$

On flying lead versions, the LED resistor can be integrated by APEM on request.

MATERIALS

- Case : thermoplastic UL94-V0
- Actuator : polyamide 6/6
- Bushing/bezel : polyamide 6/6
- Contacts :
  4 and **7** : silver, gold plated
  2 : silver (screw terminals)
- Multi-wire lead AWG20, section 0,6 mm²
- LED wire : AWG26, section 0,12 mm²
- Lens : polycarbonate
- Terminal seal : epoxy

PANEL CUT-OUT

① Flat seal

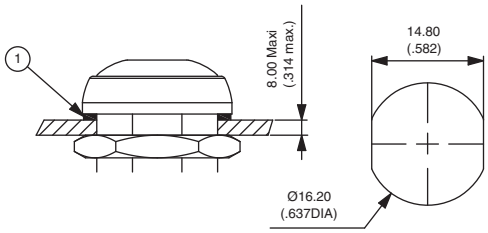

MATRIX MOUNTING

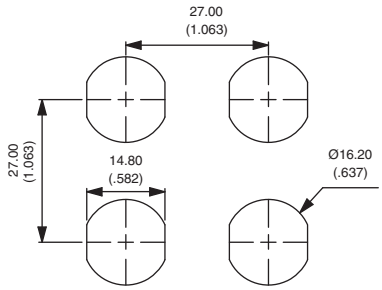

IR series

Sealed pushbutton switches - bushing Ø 16 mm - momentary - standard version

Overview

MODEL STRUCTURE

IR

SERIES

Actuator shapes

- **C** Square
- **R** Round, curved
- **P** Round, flat

Electrical function

- **3** Normally open (NO)

Terminals

- **S** Solder lugs
- **F** Flying leads
- **P** Straight PC
- **Z** Quick-connect (non-illuminated)
- **V** Screw (non-illuminated)

Contacts

- **4** Silver, gold plated
- **2** Silver (screw terminals only)

B1

OPTIONS

Actuator colours

- **1** Blue
- **B** Dark blue
- **2** Black
- **3** Green
- **4** Grey
- **5** Yellow
- **6** Red
- **7** White
- **8** Bright chrome
- **9** Orange
- **A** Satin chrome

Bushing & bezel

- **0** Transparent (round bezel only) New!
- **2** Black (std)
- **7** White

Other : on request.

Illumination

- **Blank** Non-illuminated
- **L** Central lens
- **B** Bezel (round only)

LED colours

- **Blank** Non-illuminated
- **0S** Super red
- **0Y** Yellow
- **0G** Green
- **0B** Blue
- **0W** White

ABOUT THIS SERIES

On the following pages, you will find successively :
model structure of switches and options in the same order as in above chart

Dimensions : first dimensions are in mm while inches are shown as bracketed numbers.

NOTICE : please note that not all combinations of above numbers are available.
Refer to the following pages for further information.

Mounting accessories : Standard hardware supplied : 1 hex nut 19 mm (.748) across flats and 1 flat seal
Hex nut P/N U4116.

Packaging unit : 25 pieces for flying lead models - 40 pieces for other models

Sealed pushbutton switches - bushing Ø 16 mm - momentary - standard version

Round - illuminated

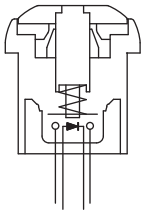

Function 3 (NO)

- Five LED colours
- Tin plated LED terminals
- Gold plated contacts

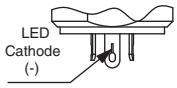

MODEL STRUCTURE

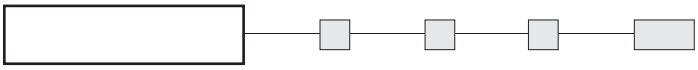

Actuator marking available on IRP models (symbol 12 mm max.). On request.

Solder lug terminals

Curved actuator **IRR3S4** Normally Open

Flat actuator **IRP3S4** Normally Open

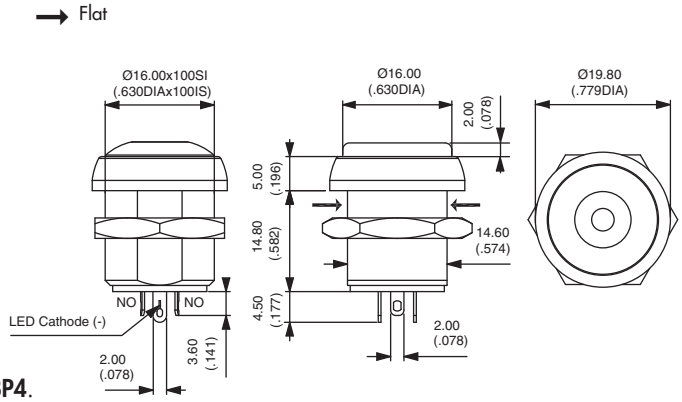

Also available with straight PC terminals : **IR•3P4**.
LED colour is indicated by the bottom of the switch.

Sealed flying lead terminals

Curved actuator **IRR3F4** Normally Open

Flat actuator **IRP3F4** Normally Open

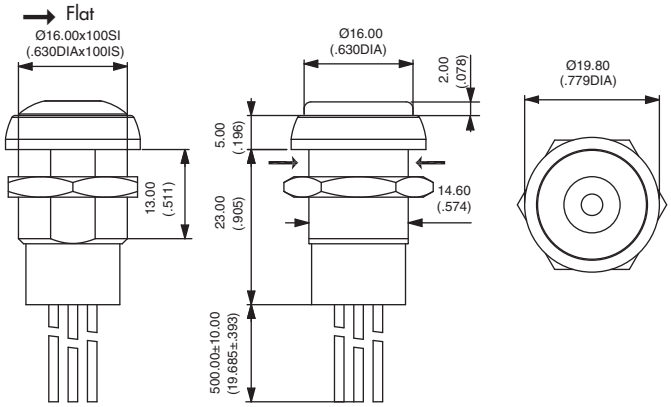

Wire colours : black : NO contact,
red : LED anode (+), blue : LED cathode (-)

1. ACTUATOR COLOURS

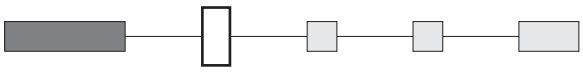

1 : blue - **B** : dark blue - **2** : black - **3** : green - **4** : grey
5 : yellow - **6** : red - **7** : white - **9** : orange
8 : bright chrome - **A** : satin chrome

2. BUSHING AND BEZEL

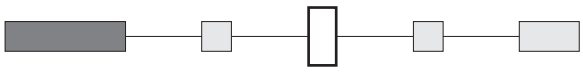

2 : black (standard) - **7** : white
0 : transparent (round bezel only)

3. ILLUMINATION

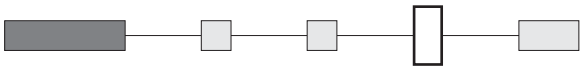

L : central lens
B : bezel (round only)

4. LED COLOURS

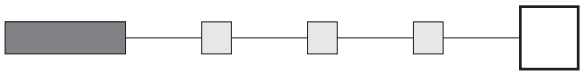

0S : super red - **0Y** : yellow - **0G** : green - **0B** : blue
0W : white

IR series

Sealed pushbutton switches - bushing Ø 16 mm - momentary - standard version

Round - non-illuminated

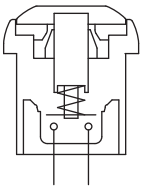

Function 3 (NO)

Straight **P**

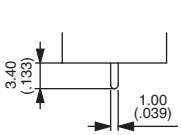

Quick-connect **Z**

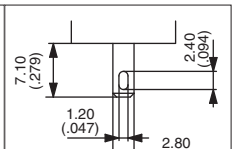

MODEL STRUCTURE

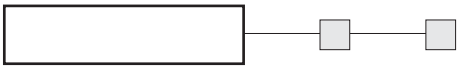

Actuator marking available on IRP models (symbol 12 mm max.). On request.

B1

Solder lug terminals - gold plated contacts

Curved actuator
IRR3S4 — Normally open

Flat actuator
IRP3S4 — Normally open

Also available with straight PC terminals : **IR•3P4** and quick-connect terminals : **IR•3Z4**.

→ Flat

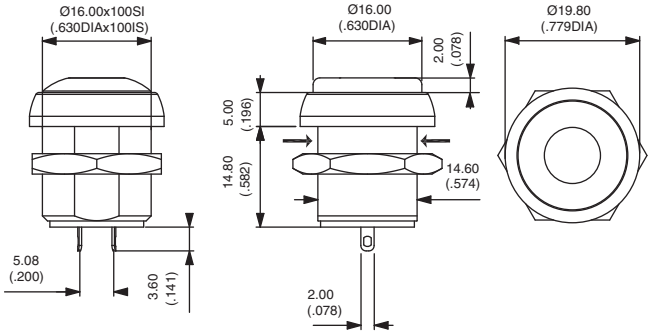

Sealed flying lead terminals - gold plated contacts

Curved actuator
IRR3F4 — Normally open

Flat actuator
IRP3F4 — Normally open

→ Flat

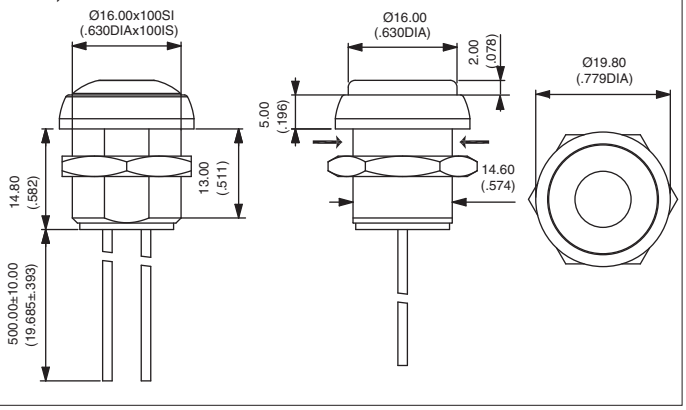

Screw terminals - silver contacts

Curved actuator
IRR3V2 — Normally open

Flat actuator
IRP3V2 — Normally open

→ Flat

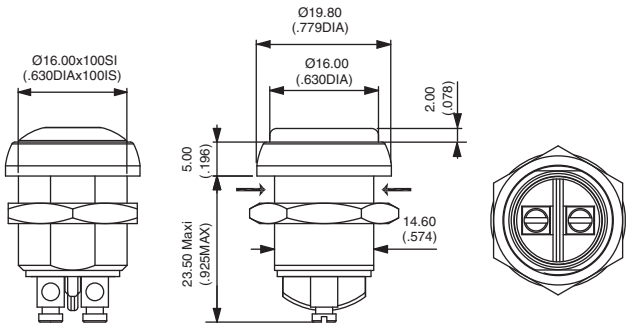

Actuator colour and bushing/bezel : select the desired codes on previous page.

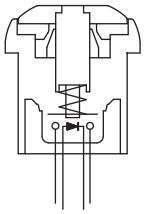

Function 3 (NO)

- Five LED colours
- Tin plated LED terminals
- Gold plated contacts

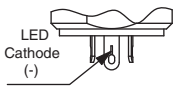

MODEL STRUCTURE

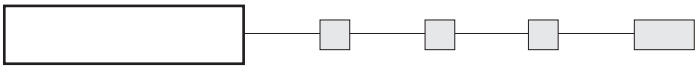

Solder lug terminals

IRC3S4

Normally Open

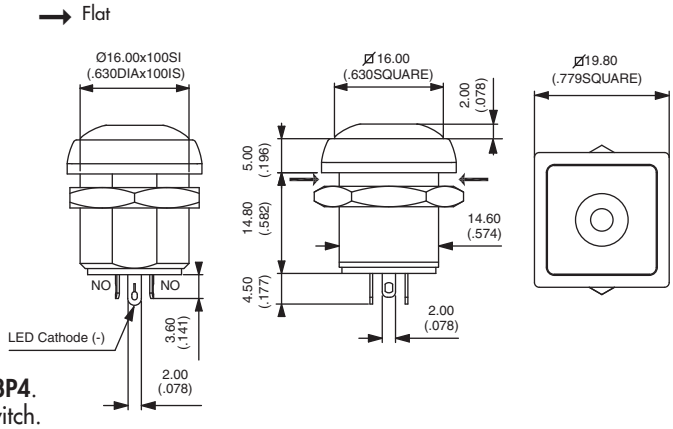

Also available with straight PC terminals : **IRC3P4**.
LED colour is indicated by the bottom of the switch.

Sealed flying lead terminals

IRC3F4

Normally Open

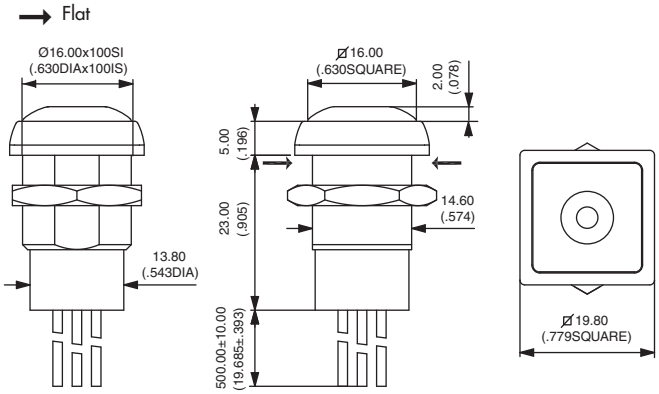

Wire colours : black : NO contact,
red : LED anode (+), blue : LED cathode (-)

1. ACTUATOR COLOURS

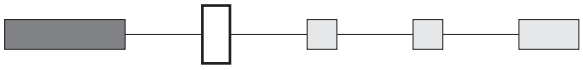

1 : blue - **B** : dark blue - **2** : black - **3** : green - **4** : grey
5 : yellow - **6** : red - **7** : white - **9** : orange
8 : bright chrome - **A** : satin chrome

2. BUSHING AND BEZEL

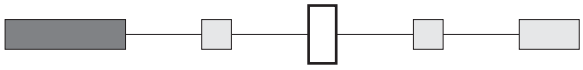

2 : black (standard) - **7** : white

3. ILLUMINATION

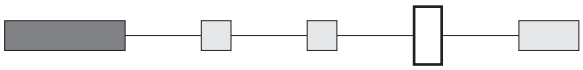

L : central lens

4. LED COLOURS

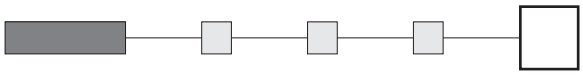

0S : super red - **0Y** : yellow - **0G** : green - **0B** : blue
0W : white

IR series

Sealed pushbutton switches - bushing Ø 16 mm - momentary - standard version

Square - non-illuminated

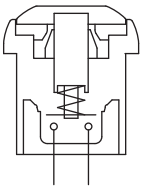

Function 3 (NO)

Straight **P**

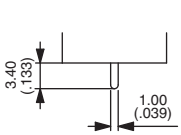

Quick-connect **Z**

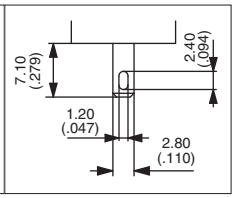

MODEL STRUCTURE

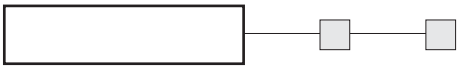

B1

Solder lug terminals - gold plated contacts

→ Flat

IRC3S4 Normally Open

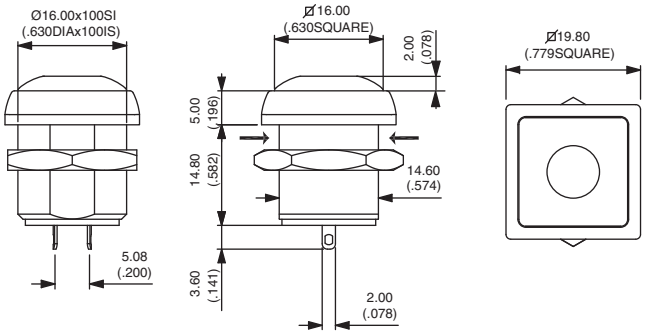

Also available with straight PC terminals : **IRC3P4** or quick-connect terminals : **IRC3Z4**.

Sealed flying lead terminals - gold plated contacts

→ Flat

IRC3F4 Normally Open

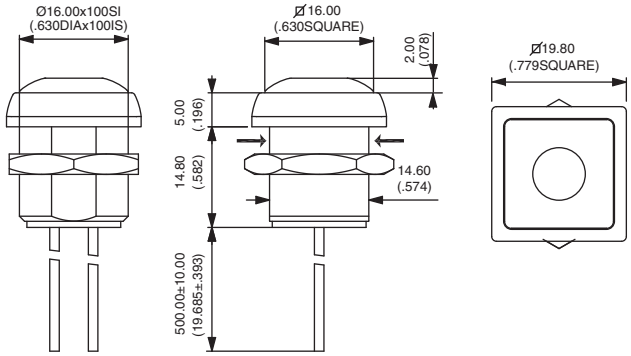

Screw terminals - silver contacts

→ Flat

IRC3V2 Normally Open

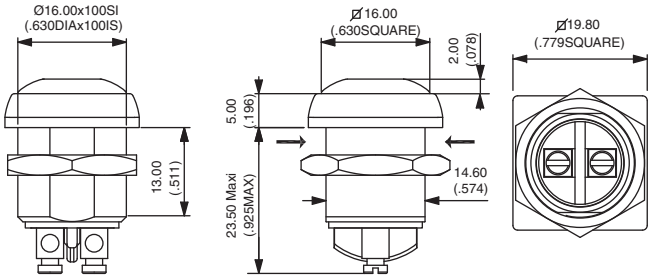

Actuator colour and bushing/bezel : select the desired codes on previous page.

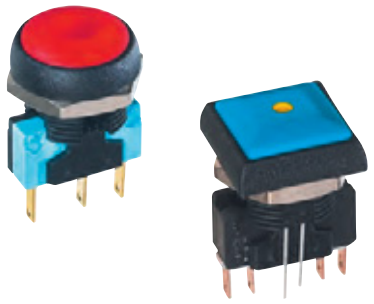

- ❑ **Microswitch technology up to 5A**
- ❑ **Tactile feedback**
- ❑ **Sealed to IP67**
- ❑ **Illuminated or non-illuminated**
  New : illuminated round bezel now available !
- ❑ **Flat round actuator for optional marking**

ENVIRONMENTAL SPECIFICATIONS

- Front panel sealing : IP67 according to IEC 60529
- Salt spray : IEC 512-6, test 11f
- Operating temperature : -20°C to +85°C

ELECTRICAL SPECIFICATIONS

- Max. current/voltage rating with resistive load :
  5A 250VAC, 50.000 cycles (function 7)
  5A 250VAC, 25.000 cycles (function 8)
- Initial contact resistance : 100 mΩ max.
- Insulation resistance : 1 GΩ min. at 500VDC
- Dielectric strength : 750 Vrms between terminals
  2.000 Vrms between terminals and frame

LED COMPONENT SPECIFICATIONS

LED colour	Forward current	Typ. forward voltage	Max. forward voltage
Super red (0S)	20mA	2V	2,5V
Yellow (0Y)	20mA	2V	2,5V
Green (0G)	10mA	2V	2,5V
Blue (0B)	10mA	3,3V	3,8V

A resistor must be series-connected by the user.

$$\text{Resistor value} = \frac{\text{supply voltage - LED forward voltage}}{\text{LED forward current}}$$

GENERAL SPECIFICATIONS

- Panel thickness : 3 mm (.118) max.
- Total travel : 1,6 mm (.062) +/- 0,3 mm
- Typical operating force : 4N +/- 2N
- Mechanical life : 1.000.000 cycles
- Torque : 0,8 Nm max. applied to nut
- Soldering : 320°C max. for 3 sec.

MATERIALS

- Case : thermoplastic UL94-V0
- Actutor : polyamide 6/6
- Bushing/bezel : polyamide 6/6
- Contacts : silver
- Lens : polycarbonate

PANEL CUT-OUT

① Flat seal

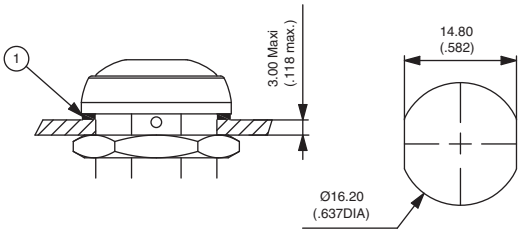

MATRIX MOUNTING

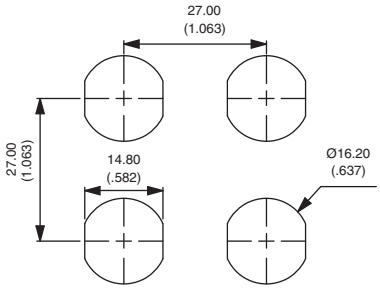

IR series

Sealed pushbutton switches - bushing Ø 16 mm - momentary - microswitch version

Overview

MODEL STRUCTURE

IR				
SERIES	Actuator shapes	Electrical functions	Terminals	Contacts

Actuator shapes

- **C** Square
- **R** Round, curved
- **P** Round, flat

Electrical functions

- **7** NC + NO (3 terminals)
- **8** NC/NO combined (4 terminals)

Terminals

- **Z** Solder lug or quick-connect

Contacts

- **2** Silver

B1

OPTIONS

Actuator colours

- **1** Blue
- **B** Dark blue
- **2** Black
- **3** Green
- **4** Grey
- **5** Yellow
- **6** Red
- **7** White
- **8** Bright chrome
- **9** Orange
- **A** Satin chrome

Bushing & bezel

- **0** Transparent (round bezel only) New!
- **2** Black (std)
- **7** White

Other : on request.

Illumination

- **Blank** Non-illuminated
- **L** Central lens
- **B** Bezel (round only)

LED colours

- **Blank** Non-illum.
- **0S** Super red
- **0Y** Yellow
- **0G** Green
- **0B** Blue

The IR series for high currents is based on a microswitch. Please note that this microswitch is supplied separately.

ABOUT THIS SERIES

On the following pages, you will find successively :
model structure of switches and options in the same order as in above chart

Dimensions : first dimensions are in mm while inches are shown as bracketted numbers.

NOTICE : please note that not all combinations of above numbers are available.
Refer to the following pages for further information.

Mounting accessories : Standard hardware supplied : 1 hex nut 19 mm (.748) across flats and 1 flat seal.
Hex nut P/N : U4116

Packaging unit : 25 pieces for flying lead models - 40 pieces for other models

IR series

Sealed pushbutton switches - bushing Ø 16 mm - momentary - microswitch version

Round - illuminated

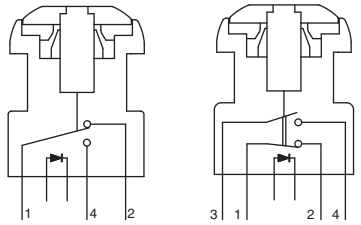

Funct. 7 (NC+NO) Funct. 8 (NC/NO)

- Four LED colours
- Tin plated LED terminals
- Silver contacts

Quick-connect | Solder lug

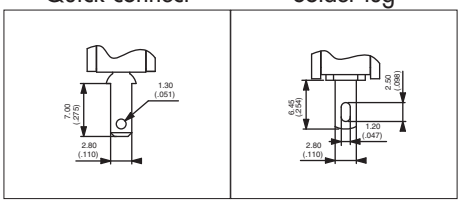

Funct. 7 (3 terminals) Funct. 8 (4 terminals)

MODEL STRUCTURE

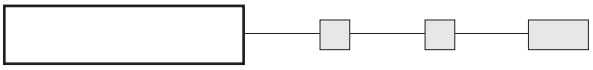

Actuator marking available on IRP models (symbol 12 mm max.). On request.

B1

Quick-connect terminals - NC+NO - 3 terminals

Curved actuator **IRR7Z2** — NC+NO

Flat actuator **IRP7Z2** — NC+NO

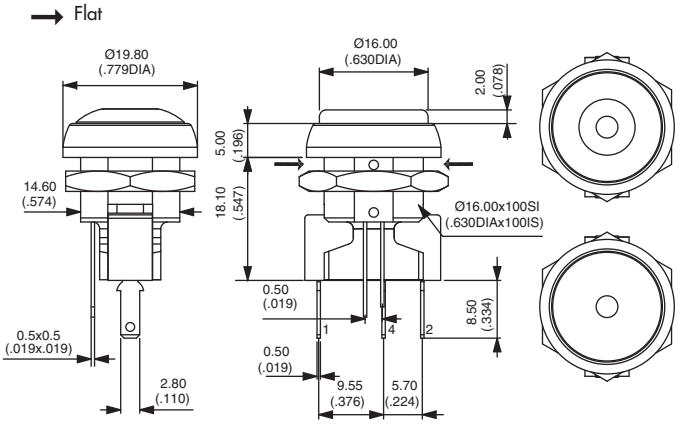

Solder lug terminals - NC/NO - 4 terminals

Curved actuator **IRR8Z2** — NC/NO combined

Flat actuator **IRP8Z2** — NC/NO combined

Terminals should be used as solder lugs only.

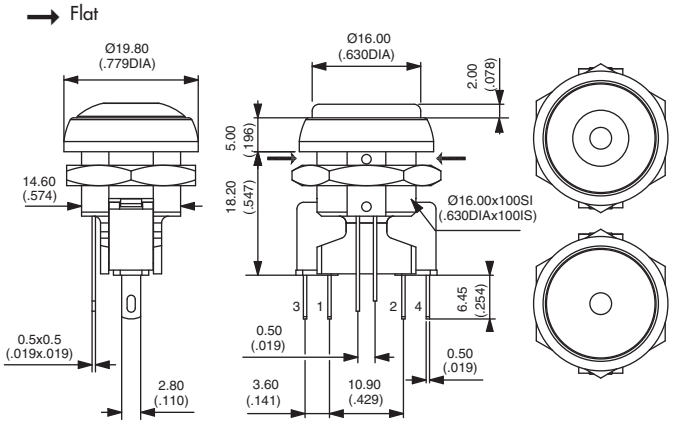

1. ACTUATOR COLOURS

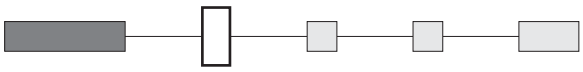

1 : blue - **B** : dark blue - **2** : black - **3** : green - **4** : grey
5 : yellow - **6** : red - **7** : white - **9** : orange
8 : bright chrome - **A** : satin chrome

2. BUSHING AND BEZEL

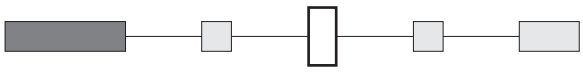

2 : black (standard) - **7** : white
0 : transparent (round bezel only)

3. ILLUMINATION

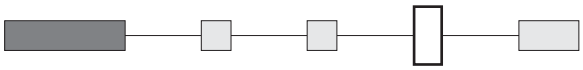

L : central lens
B : bezel (round only)

4. LED COLOURS

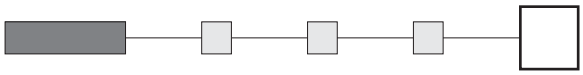

0S : super red - **0Y** : yellow - **0G** : green - **0B** : blue

IR series

Sealed pushbutton switches - bushing Ø 16 mm - momentary - microswitch version

Round - non-illuminated

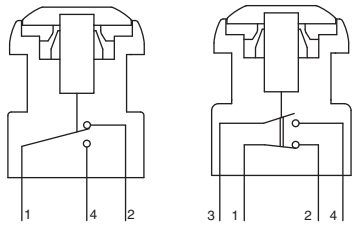

Funct. 7 (NC+NO) Funct. 8 (NC/NO)

- Silver contacts

Quick-connect | Solder lug

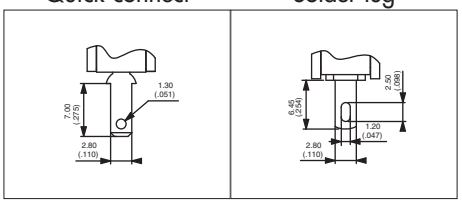

Funct. 7 (3 terminals) Funct. 8 (4 terminals)

B1

MODEL STRUCTURE

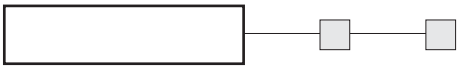

Actuator marking available on IRP models (symbol 12 mm max.). On request.

Quick-connect terminals - NC+NO - 3 terminals

Curved actuator
IRR7Z2 NC+NO

Flat actuator
IRP7Z2 NC+NO

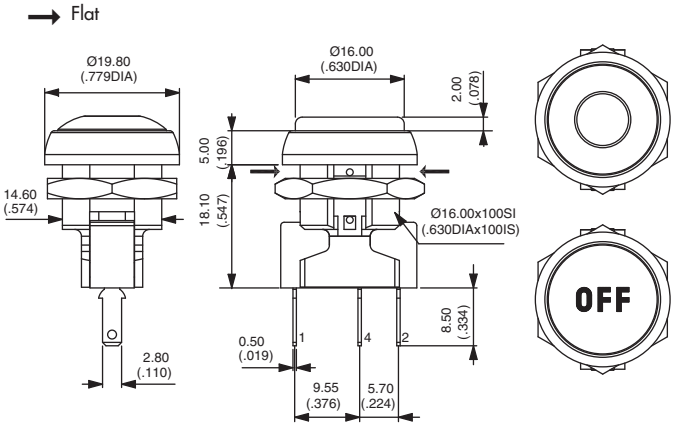

Solder lug terminals - NC/NO - 4 terminals

Curved actuator
IRR8Z2 NC/NO combined

Flat actuator
IRP8Z2 NC/NO combined

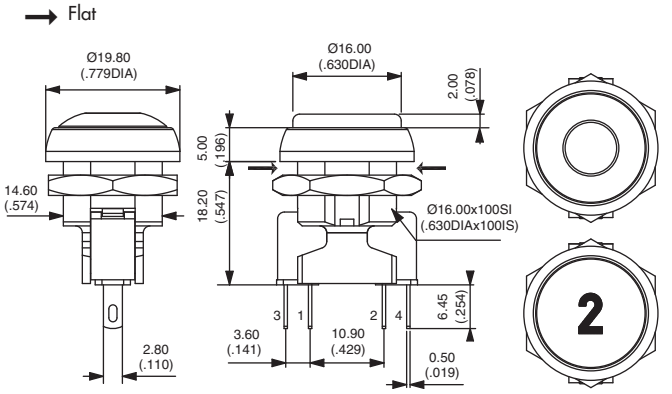

Terminals should be used as solder lugs only.

ACTUATOR COLOURS

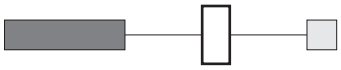

1 : blue - **B** : dark blue - **2** : black - **3** : green - **4** : grey - **5** : yellow - **6** : red - **7** : white - **9** : orange - **8** : bright chrome
A : satin chrome

BUSHING AND BEZEL FINISH

2 : black (standard) - **7** : white

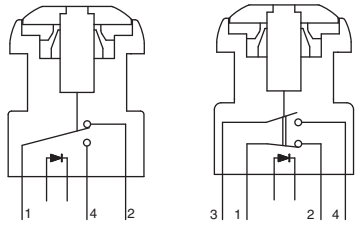

Funct. 7 (NC+NO) Funct. 8 (NC/NO)

- Four LED colours
- Tin plated LED terminals
- Silver contacts

Quick-connect | Solder lug

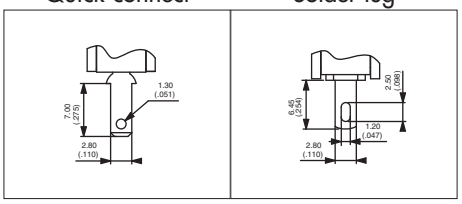

Funct. 7 (3 terminals) Funct. 8 (4 terminals)

MODEL STRUCTURE

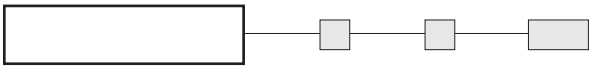

B1

Quick-connect terminals - NC+NO - 3 terminals

IRC7Z2

NC+NO

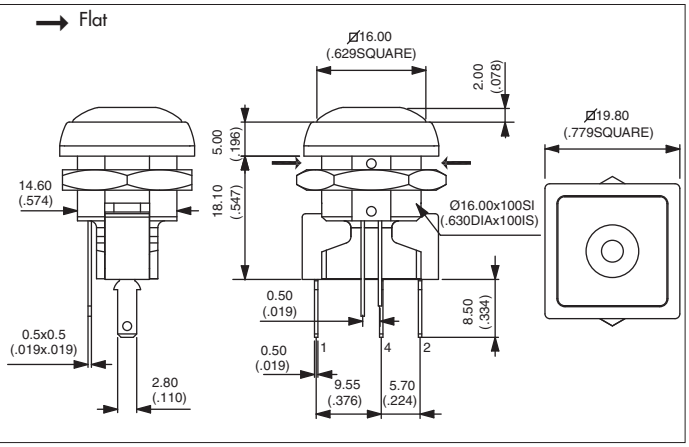

Solder lug terminals - NC/NO - 4 terminals

IRC8Z2

NC/NO combined

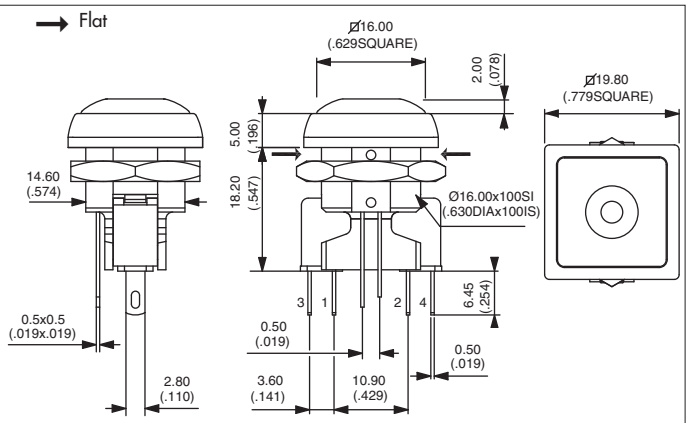

Terminals should be used as solder lugs only.

1. ACTUATOR COLOURS

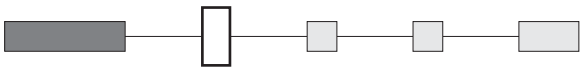

1 : blue - **B** : dark blue - **2** : black - **3** : green - **4** : grey
5 : yellow - **6** : red - **7** : white - **9** : orange
8 : bright chrome - **A** : satin chrome

2. BUSHING AND BEZEL

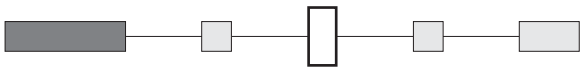

2 : black (standard) - **7** : white

3. ILLUMINATION

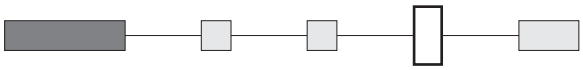

L : central lens

4. LED COLOURS

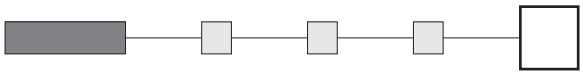

0S : super red - **0Y** : yellow - **0G** : green - **0B** : blue

IR series

Sealed pushbutton switches - bushing Ø 16 mm - momentary - microswitch version

Square - non-illuminated

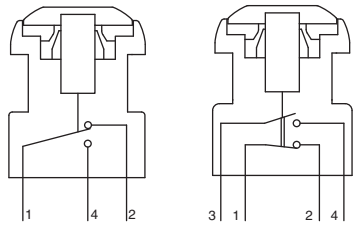

Funct. 7 (NC+NO) Funct. 8 (NC/NO)

- Silver contacts

Quick-connect | Solder lug

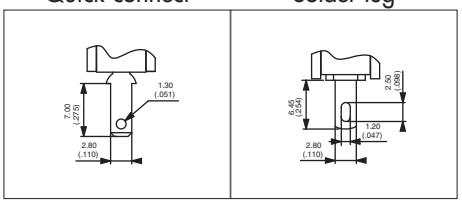

Funct. 7 (3 terminals) Funct. 8 (4 terminals)

MODEL STRUCTURE

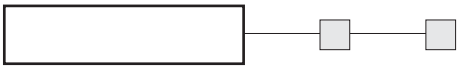

B1

Quick-connect terminals - NC+NO - 3 terminals

IRC7Z2

NC+NO

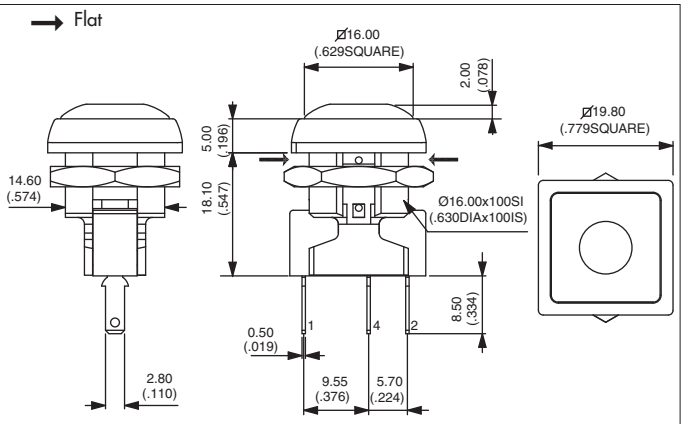

Solder lug terminals - NC/NO - 4 terminals

IRC8Z2

NC/NO combined

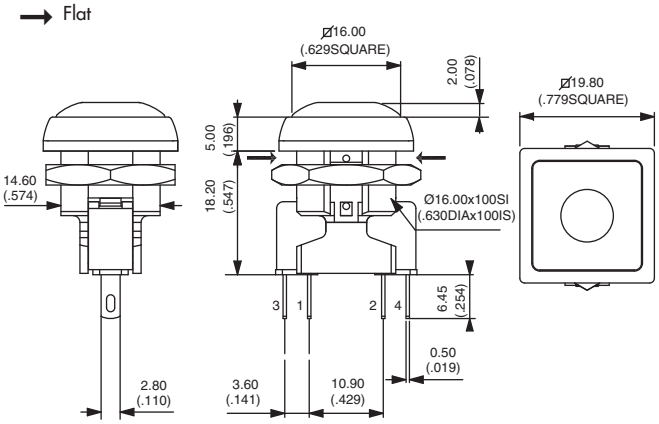

Terminals should be used as solder lugs only.

ACTUATOR COLOURS

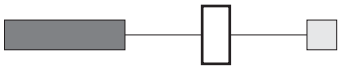

1 : blue - **B** : dark blue - **2** : black - **3** : green - **4** : grey - **5** : yellow - **6** : red - **7** : white - **9** : orange - **8** : bright chrome
A : satin chrome

BUSHING AND BEZEL FINISH

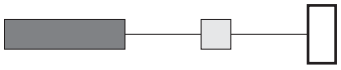

2 : black (standard) - **7** : white

- ❑ **Latching action models**
- ❑ **Sealed to IP67**
- ❑ **Illuminated or non-illuminated**
  New : illuminated round bezel now available !
- ❑ **Flat round actuator for optional marking**

ENVIRONMENTAL SPECIFICATIONS

- Front panel sealing : IP67 according to IEC 60529
- Shock resistance : 100 g according to IEC 512-4, test 6c
- Vibration resistance : 10-500Hz - 10 g according to IEC 512-4, test 6d
- Salt spray : IEC 512-6, test 11f
- Operating temperature : -40°C to +85°C

ELECTRICAL SPECIFICATIONS

- Max. current/voltage rating with resistive load (gold plated contacts) :
  - Code 4 : 100mA 24VDC, 200.000 cycles
  - Code 7 : 4A 12VDC, 200.000 cycles
    1A 48VDC, 200.000 cycles
    3A 48VDC, 75.000 cycles
- Initial contact resistance : 100 mΩ max.
- Insulation resistance : 1 GΩ min. at 500VDC
- Dielectric strength : 1.500 Vrms between terminals

LED COMPONENT SPECIFICATIONS

LED colour	Forward current	Typ. forward voltage	Max. forward voltage
Super red (0S)	20mA	1,95V	1,95V
Yellow (0Y)	20mA	2V	2,05V
Green (0G)	20mA	2,1V	2,5V
Blue (0B)	20mA	3,2V	4V

A resistor must be series-connected by the user.

$$\text{Resistor value} = \frac{\text{supply voltage - LED forward voltage}}{\text{LED forward current}}$$

On flying lead versions, the LED resistor can be integrated by APEM on request.

GENERAL SPECIFICATIONS

- Panel thickness : 8 mm (.314) max.
- Total travel : 2,5 mm (.098) +/- 0,3 mm
- Typical operating force : 5N +/- 2N
- Low level or mechanical life : 200.000 cycles
- Torque : 0,8 Nm max. applied to nut
- Soldering : 320°C max. for 3 sec.

MATERIALS

- Case : thermoplastic UL94-V0
- Plunger : polyamide
- Bushing/bezel : polyamide
- Contacts : silver, gold plated (codes **4** and **7**)
- Multi-wire lead AWG20, section 0,6 mm²
- LED wire : AWG26, section 0,12 mm²
- Lens : polycarbonate
- Terminal seal : epoxy

PANEL CUT-OUT

① Flat seal

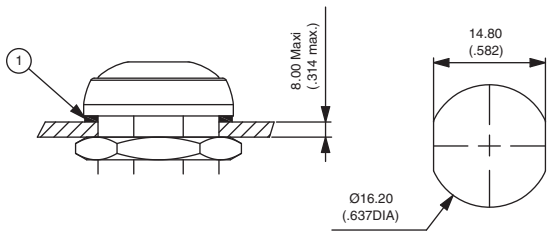

MATRIX MOUNTING

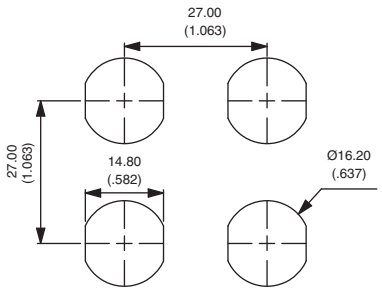

The company reserves the right to change specifications without notice.

IR series

Sealed pushbutton switches - bushing Ø 16 mm - latching

Overview

MODEL STRUCTURE

IR				
SERIES	Actuator shapes	Electrical function	Terminals	Contacts

Actuator shapes

C	Square
R	Round, curved
P	Round, flat

Electrical function

1	ON - OFF

Terminals

S	Solder lugs
F	Flying leads
P	Straight PC
Z	Quick-connect

Contacts

4	Silver, gold plated

B1

OPTIONS

Actuator colours

1	Blue
B	Dark blue
2	Black
3	Green
4	Grey
5	Yellow
6	Red
7	White
8	Bright chrome
9	Orange
A	Satin chrome

Bushing & bezel

0	Transparent (round bezel only) New!
2	Black (std)
7	White

Other : on request.

Illumination

Blank	Non-illuminated
L	Central lens
B	Bezel (round only)

LED colours

Blank	Non-illum.
0S	Super red
0Y	Yellow
0G	Green
0B	Blue

ABOUT THIS SERIES

On the following pages, you will find successively :
model structure of switches and options in the same order as in above chart

Dimensions : first dimensions are in mm while inches are shown as bracketed numbers.

NOTICE : please note that not all combinations of above numbers are available.
Refer to the following pages for further information.

Mounting accessories : Standard hardware supplied : 1 hex nut 19 mm (.748) across flats and 1 flat seal
Hex nut P/N U4116.

Packaging unit : 25 pieces for flying lead models - 40 pieces for other models

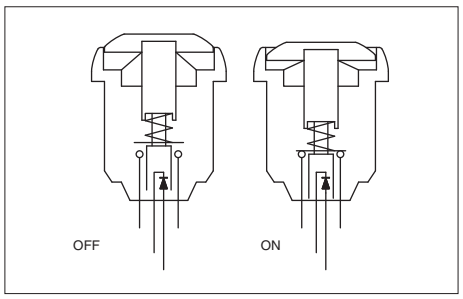

- Four LED colours
- Tin plated LED terminals
- Gold plated contacts

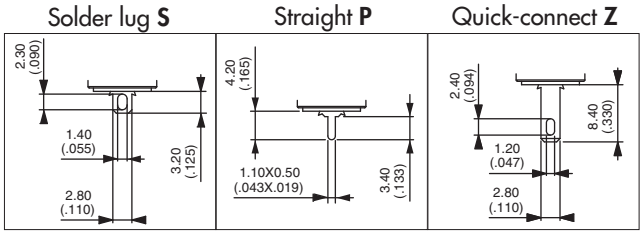

MODEL STRUCTURE

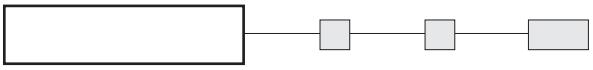

Plunger marking available on IRP models (symbol 12 mm max.). On request.

B1

Solder lug terminals

Curved actuator
IRR1S4 OFF - ON

Flat actuator
IRP1S4 OFF - ON

Also available with straight PC terminals : **IR•1P4**
& quick-connect terminals : **IR•1Z4**.

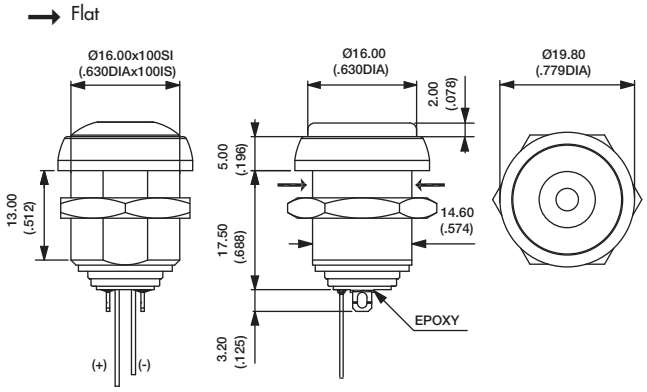

Sealed flying lead terminals

Curved actuator
IRR1F4 OFF - ON

Flat actuator
IRP1F4 OFF - ON

Wire colours : black : contact,
red : LED anode (+), blue : LED cathode (-)

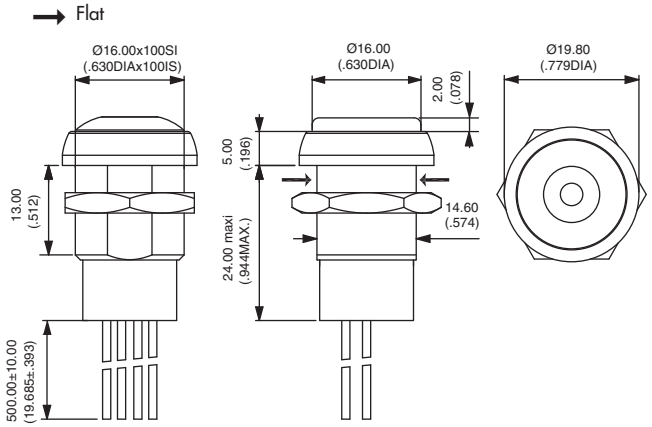

1. ACTUATOR COLOURS

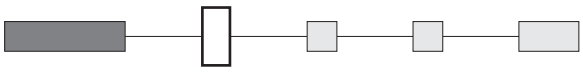

1 : blue - **B** : dark blue - **2** : black - **3** : green - **4** : grey
5 : yellow - **6** : red - **7** : white - **9** : orange
8 : bright chrome - **A** : satin chrome

2. BUSHING AND BEZEL

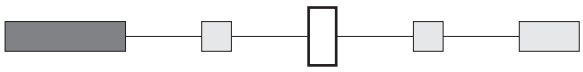

2 : black (standard) - **7** : white
0 : transparent (round bezel only)

3. ILLUMINATION

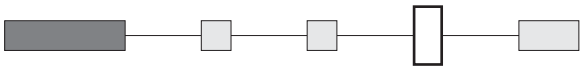

L : central lens
B : bezel (round only)

4. LED COLOURS

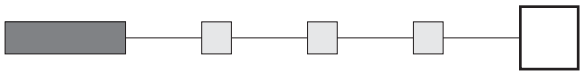

0S : super red - **0Y** : yellow - **0G** : green - **0B** : blue

IR series

Sealed pushbutton switches - bushing Ø 16 mm - latching

Round - non-illuminated

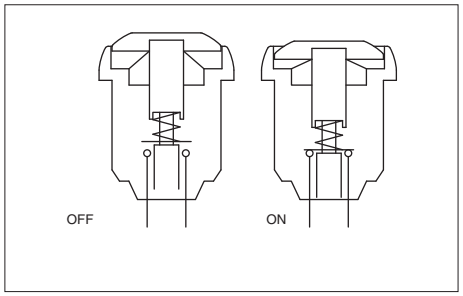

• Gold plated contacts

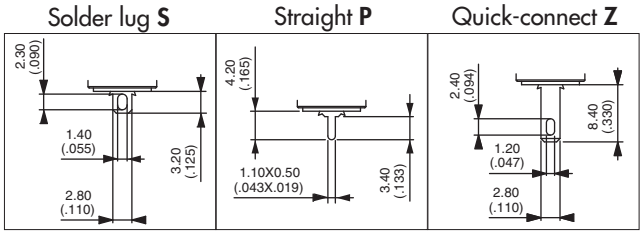

MODEL STRUCTURE

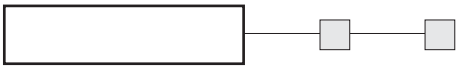

Plunger marking available on IRP models (symbol 12 mm max.). On request.

B1

Solder lug terminals

Curved actuator
IRR1S4 OFF - ON

Flat actuator
IRP1S4 OFF - ON

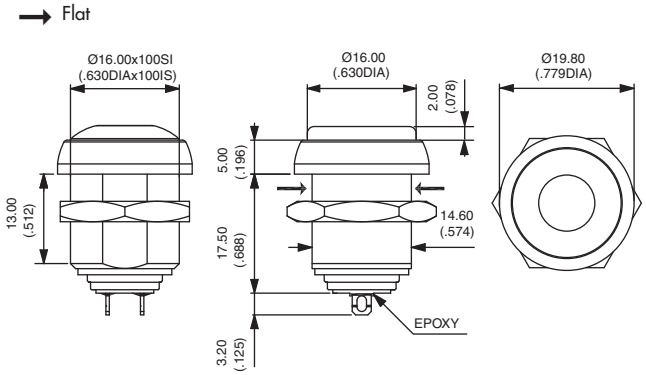

Also available with straight PC terminals : **IR•1P4**
& quick-connect terminals : **IR•1Z4**.

Sealed flying lead terminals

Curved actuator
IRR1F4 OFF - ON

Flat actuator
IRP1F4 OFF - ON

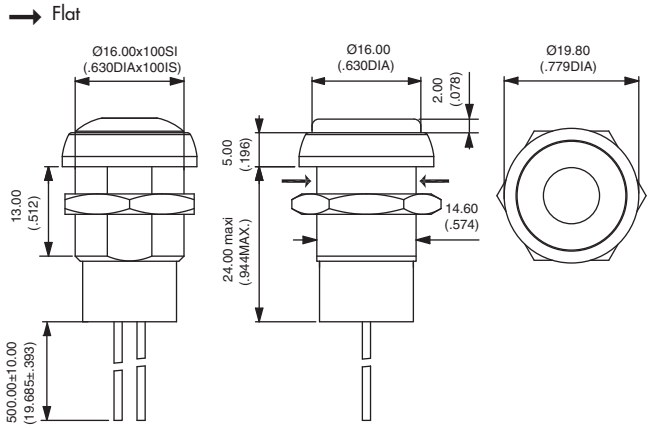

ACTUATOR COLOURS

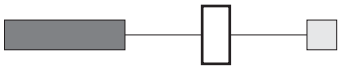

1 : blue - **B** : dark blue - **2** : black - **3** : green - **4** : grey - **5** : yellow - **6** : red - **7** : white - **8** : bright chrome - **9** : orange
A : satin chrome

BUSHING AND BEZEL FINISH

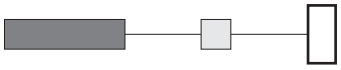

2 : black (standard)

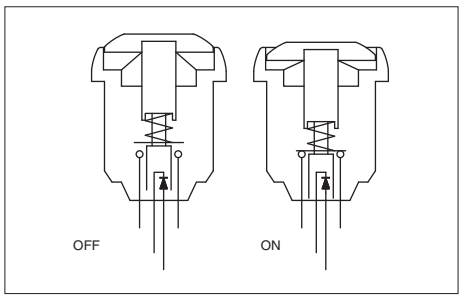

- Four LED colours
- Tin plated LED terminals
- Gold plated contacts

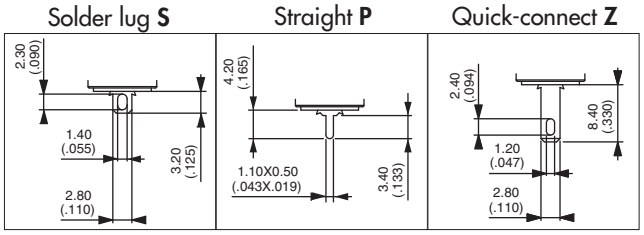

MODEL STRUCTURE

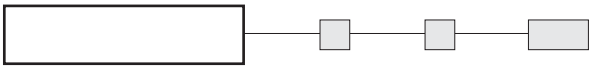

B1

Solder lug terminals

Curved actuator
IRC1S4 OFF - ON

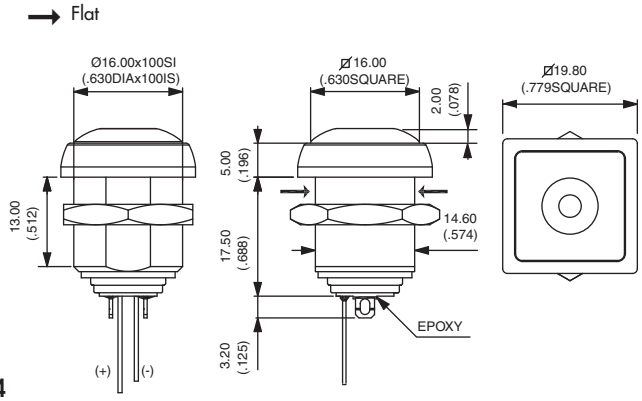

Also available with straight PC terminals : **IRC1P4**
& quick-connect terminals : **IRC1Z4**.

Sealed flying lead terminals

Curved actuator
IRC1F4 OFF - ON

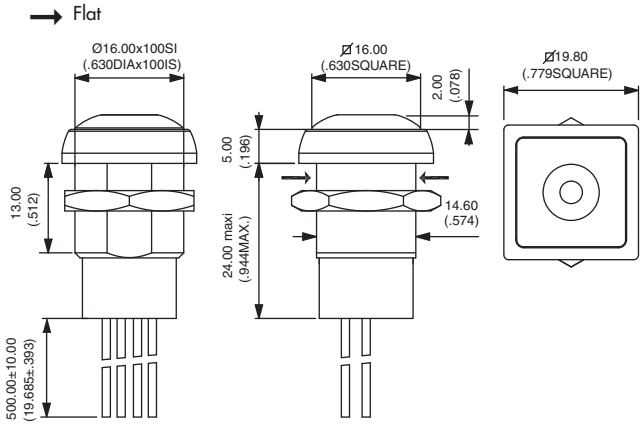

Wire colours : black : contact,
red : LED anode(+), blue : LED cathode (-)

1. ACTUATOR COLOURS

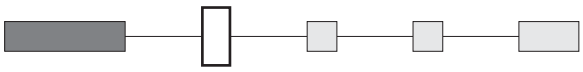

1 : blue - **B** : dark blue - **2** : black - **3** : green - **4** : grey
5 : yellow - **6** : red - **7** : white - **9** : orange
8 : bright chrome - **A** : satin chrome

2. BUSHING AND BEZEL

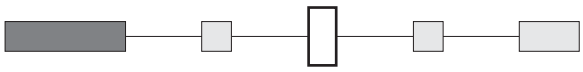

2 : black (standard) - **7** : white

3. ILLUMINATION

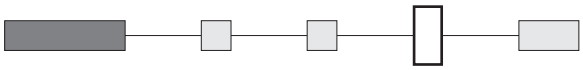

L : central lens

4. LED COLOURS

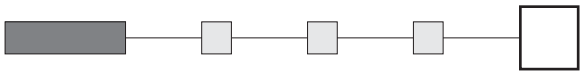

0S : super red - **0Y** : yellow - **0G** : green - **0B** : blue

IR series

Sealed pushbutton switches - bushing Ø 16 mm - latching

Square - non-illuminated

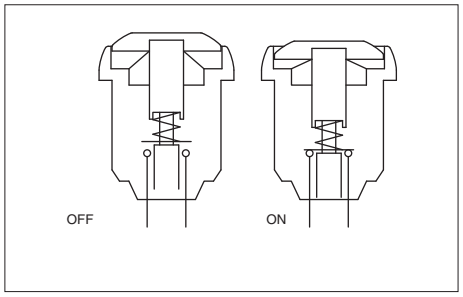

• Gold plated contacts

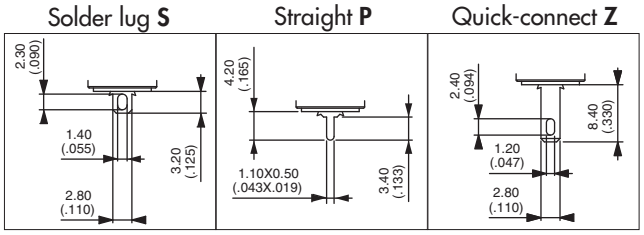

MODEL STRUCTURE

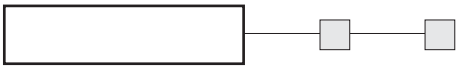

B1

Solder lug terminals

Curved actuator
IRC1S4 OFF - ON

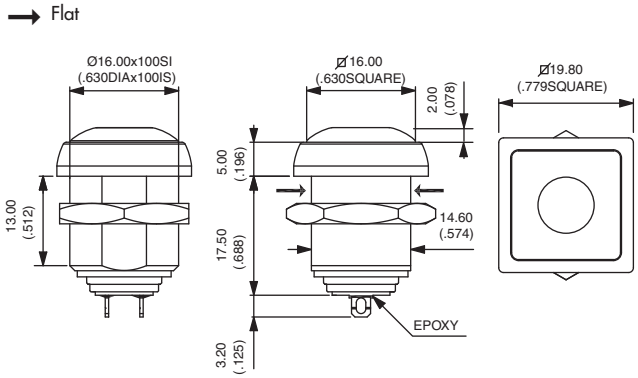

Also available with straight PC terminals : **IRC1P4**
& quick-connect terminals : **IRC1Z4**.

Sealed flying lead terminals

Curved actuator
IRC1F4 OFF - ON

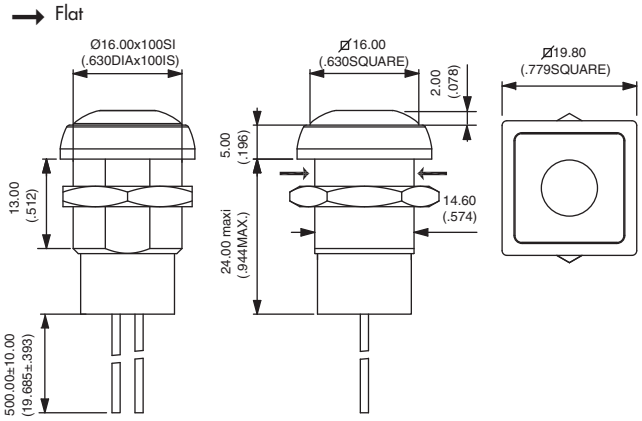

ACTUATOR COLOURS

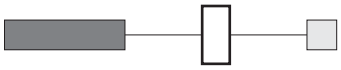

1 : blue - **B** : dark blue - **2** : black - **3** : green - **4** : grey - **5** : yellow - **6** : red - **7** : white - **8** : bright chrome - **9** : orange
A : satin chrome

BUSHING AND BEZEL FINISH

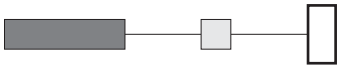

2 : black (standard)

IA series

Low profile pushbutton switches for harsh environments - bushing Ø 16 mm - momentary

Distinctive features - Specifications - Overview

- ❑ **Resistant to frost, sand and hydrocarbons**
- ❑ **Tactile feedback**
- ❑ **Front panel sealed to IP65 and IP67**

B1

ENVIRONMENTAL SPECIFICATIONS

- Front panel sealing (see drawing opposite) : IP65 and IP67 acc. to IEC 60529
- Salt spray : IEC 512-6, test 11f
- Operating temperature : -20°C to +65°C

ELECTRICAL AND GENERAL SPECIFICATIONS

- Max. current/voltage rating with resistive load : 2A 24VDC
- Initial contact resistance : 100mΩ max.
- Insulation resistance : 100 MΩ min. at 500VDC
- Dielectric strength : 500 Vrms
- Electrical life at full load : 1.000.000 cycles

- Panel thickness : 7 mm (.276) max.
- Total travel : 1,5 mm (.059) +/- 0,3 mm
- Typical operating force : 7N +/- 2N
- Low level or mechanical life : 1.000.000 cycles
- **Torque : 0,5 to 1Nm max. applied to nut**

MATERIALS

- Case/bushing : thermoplastic
- Actuator : polyurethane
- Contacts : silver, gold plated
- Multi-wire lead AWG20, section 0,6 mm².
- Terminal seal : epoxy

PANEL MOUNTING

① Flat seal

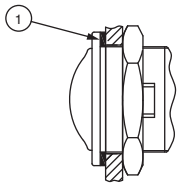

IA						
SERIES	Actuator shape	Electrical functions	Terminals	Contacts	Actuator colours	Case colour

Actuator shape
- **R** round

Electrical functions
- **3** Normally open (NO)
- **5** NC/NO combined

Terminals
- **F** Flying leads

Contacts
- **1** Silver, gold plated

Actuator colours
- **1** Blue
- **2** Black
- **3** Green
- **4** Grey
- **5** Yellow
- **6** Red
- **7/1** White
- **9** Orange

Case colour
- **00** Black

Dimensions : First dimensions are in mm while inches are shown as bracketed numbers.

A sealing boot is available to protect the switches against frost and sand. See end of this catalogue.

Mounting accessories : Standard hardware supplied : 1 hex nut 19 mm (.748) across flats and 1 flat seal.
Knurled nut U3327 available on request.

Packaging unit : 25 pieces

The company reserves the right to change specifications without notice.

IA series

Low profile pushbutton switches for harsh environments - bushing Ø 16 mm - momentary

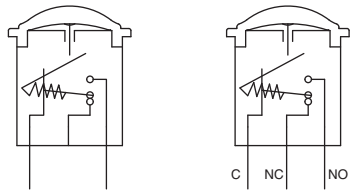

NO NC/NO combined

- Panel cut-out Ø 16,2 mm (.657)
- Min. pitch for matrix mounting :
  - with standard hex nut : 27 x 27 mm (1.062 x 1.062)
  - with knurled nut U3327: 20 x 20 mm (.787x.787)

B1

MODEL STRUCTURE

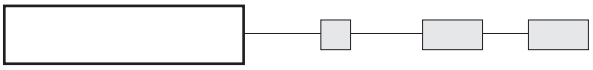

NO model has 2 terminals only.

Models

Normally open (NO)
IAR3F

NC/NO combined
IAR5F

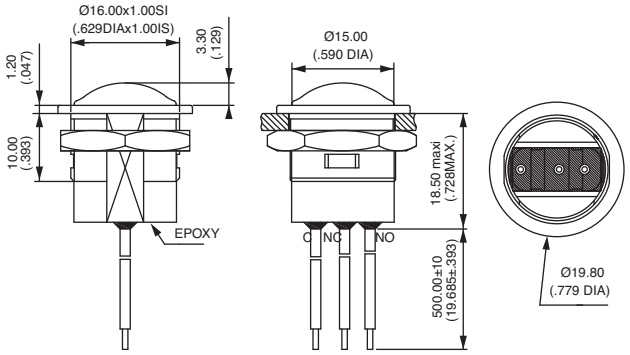

Wire colours (NC/NO) : black = common, brown = NC, blue = NO

CONTACT MATERIAL

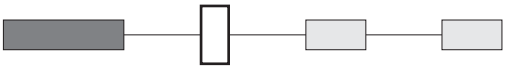

1 Silver, gold plated

ACTUATOR COLOURS

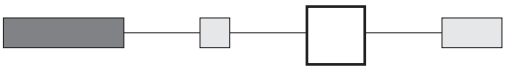

1 : blue - **2** : black - **3** : green - **4** : grey - **5** : yellow - **6** : red - **7/1** : white - **9** : orange

CASE COLOUR

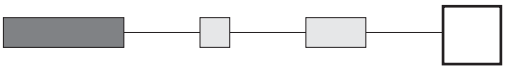

00 : black

Degree of protection provided by the enclosures of electric appliances according to IEC 60529, DIN 40050 and NFC 20-010.

SEALING IP67

IP
(Ingress Protection)

6
Totally protected against dust

7
Protected against the effects of immersion up to 1 m water (30 mn)

The illustrations show non-illuminated models.

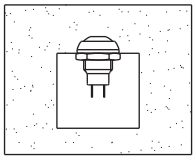

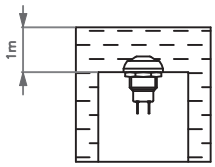

SEALING IP69K

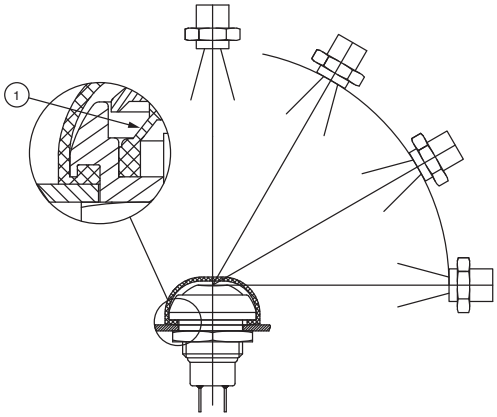

High pressure, high temperature wash down

IP69K test conditions

. Pressure : 80 - 120 bars
. Distance : 15 cm
. Temperature : 80°C ± 5°C
. Flow : 14 - 16 l/mn
. Duration : 30 seconds per position

① Elastomeric membrane

ADDITIONAL SEALING FOR IC-IM-IP-IB-IS-IH SERIES

For ROUND plungers only, illuminated or non-illuminated.

By silicone boot for protection against frost and abrasion by sand. Order separately.
- transparent : **U5125**
- blue : **U5125-1**
- black : **U5125-2**
- red : **U5125-6**

Operating temperature : -40°C to +85°C
Life expectancy : 500.000 cycles

Note : the flat seal should not be used in this case.

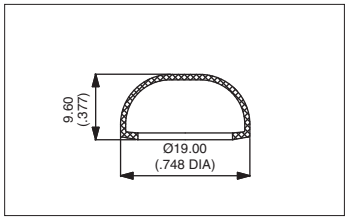

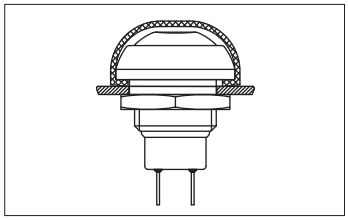

ADDITIONAL SEALING FOR IA SERIES

By silicone boot. Order separately.
- Black : **U6602**
- Yellow : **U6605**
- Red : **U6606**

Operating temperature : -40°C to +85°C
Life expectancy : 1.000.000 cycles

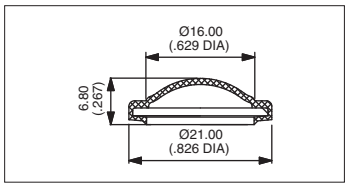

ADDITIONAL SEALING FOR IZ SERIES

By silicone boot. Order separately.
- Nickel plated nut : **N3822D005**
- Black nut : **N3822D002**

Operating temperature : -40°C to +85°C

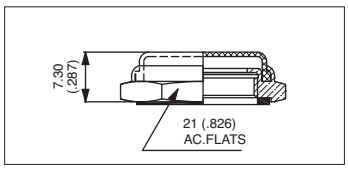

IF series

Sealed pushbutton switches with Ø 25 mm actuator - bushing dia. 16 mm

- ❑ **Can be operated with gloved hands**
- ❑ **Snap-in and threaded bushing models**
- ❑ **Resistant to frost**
- ❑ **Sealed to IP54 or IP67**

B1

ELECTRICAL AND GENERAL SPECIFICATIONS

- Max. current/voltage rating with resistive load : 400mA 32VAC - 100mA 48VDC
- Initial contact resistance : 50 mΩ max.
- Insulation resistance : 1 GΩ min. at 500VDC
- Dielectric strength : 1.000 VAC rms. between terminals and frame 1500 VAC between terminals
- Electrical life at full load : 500.000 cycles
- Panel thickness :
  - Snap-in models : 0,8 mm (.031) min. - 2,5 mm (.098) max.
  - Threaded bushing models : 0,8 mm (.031) min. - 5 mm (.196) max.
- Total travel : 4 mm (.157)
- Typical operating force : 6,5 N +/- 2N
- Low level or mechanical life : 1.000.000 cycles
- Torque : 1,5 Nm max. applied to nut
- Soldering : 320°C max. for 3 seconds

MATERIALS

- Case : thermoplastic UL94-V0
- Actuator : polyamide 12, rubber filled
- Bushing/bezel : polyamide 6/6
- Contacts : solid silver, gold plated
- Terminal seal : epoxy

ENVIRONMENTAL SPECIFICATIONS

- Front panel sealing (switches mounted on panel) :
  . IP67 (threaded bushing models)
  . IP54 (snap-in models)
- Operating temperature : -20°C to +85°C

IF						
SERIES	Mounting	Electrical function	Terminals	Contacts	Actuator colours	Case colours
	B Snap-in **S** Threaded bushing	**3** Normally open (NO)	**Z1** Quick- connect or solder 2,8 x 0,5 mm	**AD** Solid silver, gold plated	**1** Blue **1/4** Dark blue **2** Black **3** Green **5** Yellow **6** Red **7/1** White **9** Orange Grey RAL7040 : on request	**00** Black **20** Red

Models

Snap-in
IFB3Z1AD NO

Threaded bushing
IFS3Z1AD NO

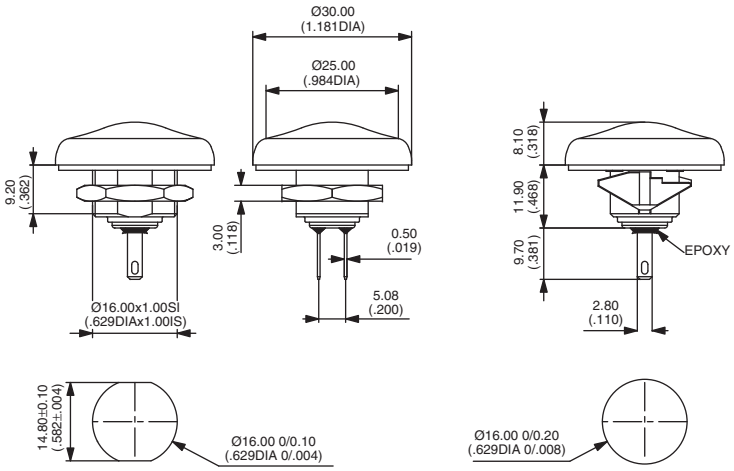

Mounting accessories : Standard hardware supplied : 1 flat seal (IFB series)
1 flat seal and 1 hex nut 19 mm (.748) across flats (IFS series) . The hex nut is presented in section I (part number 10-621).

Packaging unit : 20 pieces

The company reserves the right to change specifications without notice.

Pushbutton switches

B2

Section B2

ZP series

Tiny pushbutton switches - metal bushing

Distinctive features - Specifications - Overview

- ❑ **Ø 4,83 mm threaded bushing**
- ❑ **Solder lug and straight PC terminals**

B2

ELECTRICAL SPECIFICATIONS

- Max. current/voltage rating with resistive load :
  - gold plated contacts : 0,4VA 20V max. AC or DC
  - silver plated contacts : 0,5A 48V max. AC or DC
- Minimum load : 10mA 50mV - 10µA 5VDC
- Contact resistance : 50 mΩ max.
- Insulation resistance : 1.000 MΩ min. at 500VDC
- Dielectric strength: 1.000 Vrms 50 Hz min. between terminals and frame
  500 Vrms 50 Hz min. between terminals
- Electrical life at full load :
  - gold plated contacts : 60.000 cycles
  - silver plated contacts: 20.000 cycles

MATERIALS

- Case : thermoplastic UL94-V0
- Actuator : thermoplastic UL94-V0
- Bushing : zamac, tin plated
- Contacts and terminals :
  0 : brass, gold plated (standard)
  1 : brass, silver plated
  3 : brass, gold plated
  (1,27 micron gold)
- Terminal seal : epoxy

GENERAL SPECIFICATIONS

- Travel :
  - function 2 (ON-MOM) : 1,2 mm (.047) ± 0,3 (.11)
  - function 3 (OFF-MOM) : 1 mm (.039) ± 0,3 (.11)
- Strength of terminals : pull-out force 10N max.
- Torque : 1Nm max. applied between the 2 nuts
- Max. panel thickness : 1,5 mm (.059) with 2 nuts
- Operating temperature : -30°C to +85°C
- Moisture : 21 days 95 % (NFC 20-603 - IEC 68-2-3)

SOLDERING

- Hand soldering : 280°C max. for 5 seconds max.
- Wave soldering : 260°C max. for 5 seconds max.

ZP [ ] [ ] [ ] [ ] [ ] [ ] [ ]

SERIES

Number of poles

3	Single pole

Electrical functions

2	ON	-	MOM
3	OFF	-	MOM

Terminals

S0	Solder lug
P0	Straight PC

Contact and terminal materials

0	Brass, gold plated
1	Brass, silver plated
3	Brass, gold plated (1,27 micron gold)

Bushings

01	Threaded, with flat

Models

00	Standard model

Dimensions : First dimensions are in mm while inches are shown as bracketed numbers.

Packaging unit : 100 pieces

Mounting accessories : Standard hardware supplied with all models : 2 hex nuts 7 mm (.275) across flats P/N U5731, 1 locking ring P/N U5831 and 1 lockwasher P/N U5841.

The company reserves the right to change specifications without notice.

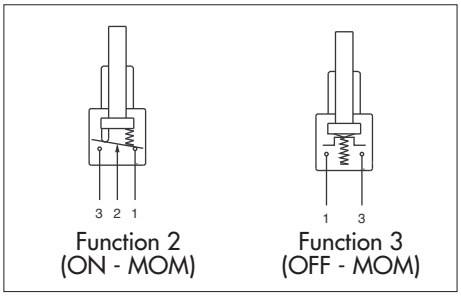

- Single pole
- Gold plated or silver plated contacts
- Epoxy sealed terminals

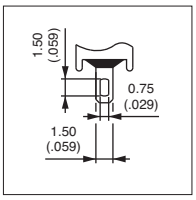

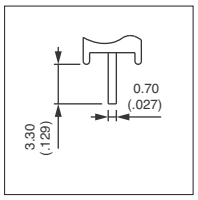

MODEL STRUCTURE

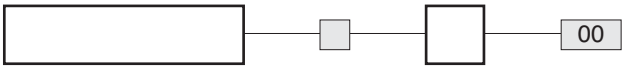

Shown in function 2 (ON-MOM)

Solder lug terminals : ZP..S0

→ Flat

ZP32S0	ON	MOM
ZP33S0	OFF	MOM

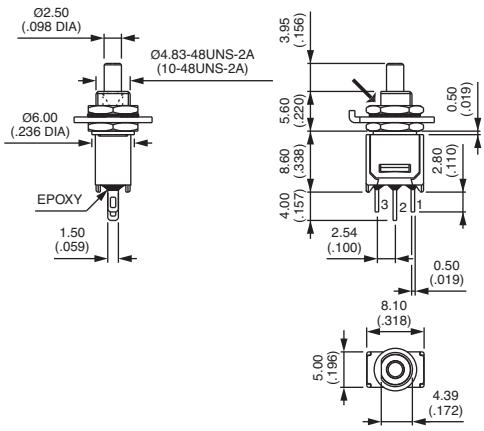

Straight PC terminals : ZP..P0

→ Flat

ZP32P0	ON	MOM
ZP33P0	OFF	MOM

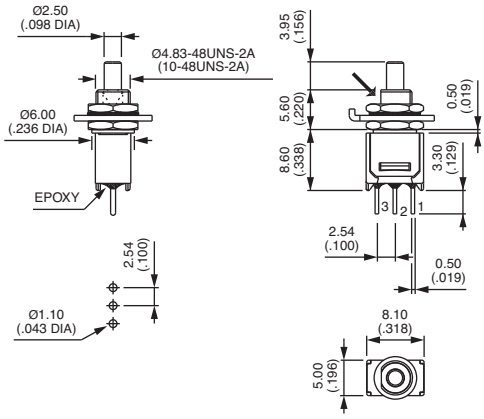

CONTACT & TERMINAL MATERIALS

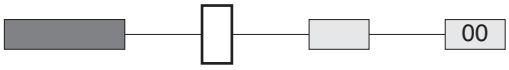

0 : Brass, gold plated (standard) - **1 :** Brass, silver plated
3 : Brass, gold plated (1,27µ gold)

BUSHING

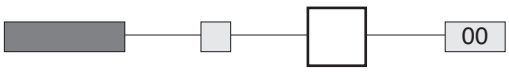

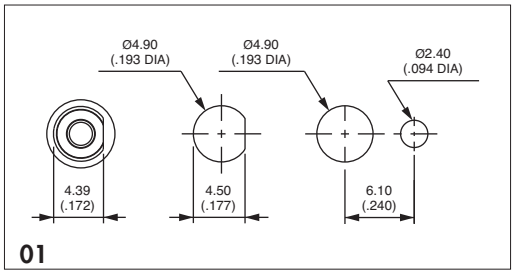

SMT TP series

Surface mount tiny washable pushbutton switches

Distinctive features and specifications

B2

- ❑ **Entirely designed for surface mount**
- ❑ **Tape and reel packaging**
- ❑ **Reflow solderable**
  - High temperature plastic materials
  - Tin plated ground plate
  - Terminal coating : pure tin plating over nickel barrier
  - Terminals turned to the outside, preventing the shadow effect in infrared soldering and permitting visual inspection of solder joints
  - Distance between case and circuit : 0,55 mm (.021)
  - End stackable with 10,16 mm (.40) pitch
  - Available with positioning pins to ensure switch orientation during the reflow process and increasing switch mechanical resistance
- ❑ **Protected against electrostatic discharges (ESD) up to 10 KV**
- ❑ **Washable**
  Construction withstands cleaning processes, including hot water under pressure

ELECTRICAL SPECIFICATIONS

- Max. current/voltage rating with resistive load : 0,4VA 20V max. AC or DC
- Minimum load : 10mA 50mV or 10µA 5VDC
- Initial contact resistance : 50 mΩ max
- Insulation resistance : 1.000 MΩ min. at 500VDC
- Dielectric strength : 1.000 Vrms. 50 Hz min. between terminals and frame 500 Vrms. 50 Hz min. between terminals
- Electrical life at full load : 60.000 cycles
- Static resistance : 10 KV (Schaffner equipment)

GENERAL SPECIFICATIONS

- Actuator travel : function 2 : 1 mm (.039) - function 3 : 0,8 mm (.031)
- Operating temperature : -40°C to +85°C
- Moisture resistance : 21days per IEC 512-6 test 11c
- Vibration resistance : 10-500 Hz / 10 g per IEC 512-4 test 6d
- Shock resistance : 50 g per IEC 512-4 test 6c

MATERIALS

- Case : high temperature plastic material UL94-V0
- Actuator : high temperature plastic material UL94-V0
- Ground plate and positioning pins : steel, tin plated
- Contacts : brass, gold plated
- Terminals : brass, with pure tin plating over nickel barrier

SOLDERING AND CLEANING

- Reflow soldering : infrared, vapor phase or infrared convection
- Washable per IEA-RS448-2 :
  - water + detergent - preferred
  - solvents
- Further information on reflow soldering : see end of catalogue.

PACKAGING

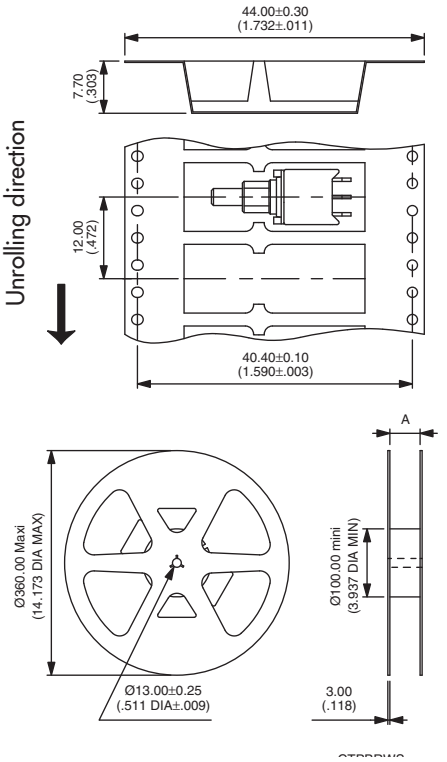

Tape width	24.00 (.944)	44.00 (1.732)
Reel (dimension A)	24.40+2.00/0.00 (.960+.078/.000)	44.40+2.00/0.00 (1.748+.078/.000)

Standard packaging unit : 700 pieces
Tape meeting international standard IEC - Publication 286-3 (EIA481A)
Start leader : 400 mm min.

Dimensions : First dimensions are in mm while inches are shown as bracketed numbers.

The company reserves the right to change specifications without notice.

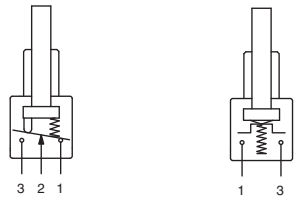

Function 2 (ON - MOM)

Function 3 (OFF - MOM)

- **With or without positioning pins**
- **Single pole**

Also available for vertical mounting. On request.

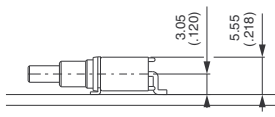

B2

Pushbutton switches

TP32WS83500	ON	MOM
TP33WS83500	OFF	MOM

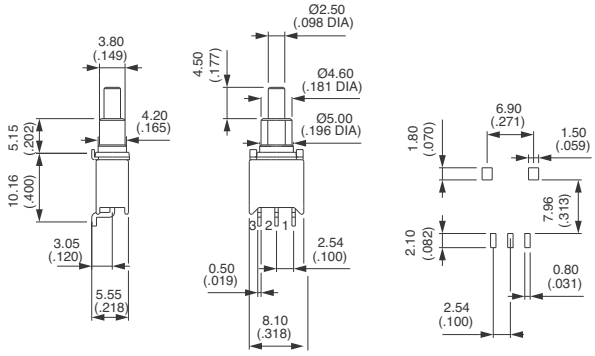

Shown in function 2

Pushbutton switches - with positioning pins

TP32WS83565	ON	MOM
TP33WS83565	OFF	MOM

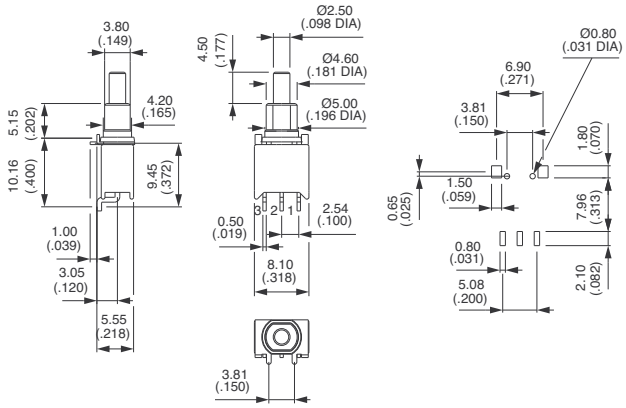

Shown in function 2

PLUNGER OPTIONS

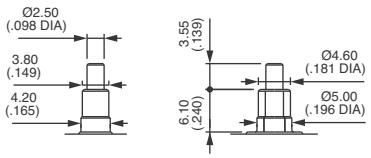

30

Short
Replace 35 with 30 in the above P/N's

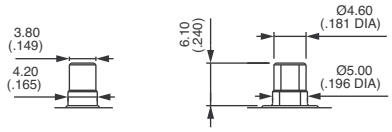

32

Flush
Replace 35 with 32 in the above P/N's.

TP series

Tiny washable momentary pushbutton switches

Distinctive features and specifications

- **Process sealed**
  - Single piece case
  - O-ring seal between actuator and bushing
  - Epoxy sealed terminals
- **Wide variety of contact materials**
- **Same PCB layout as TL, TR and TG tiny switches**

B2

ELECTRICAL SPECIFICATIONS

- Max. current/voltage rating with resistive load :
  - gold plated contacts : 0,4VA 20V max. AC or DC
  - silver plated contacts : 0,5A 48V max. AC or DC
- Minimum load : 10mA 50mV - 10µA 5VDC
- Contact resistance : 50 mΩ max.
- Insulation resistance : 1.000 MΩ min. at 500VDC
- Dielectric strength :
  1.000 Vrms 50 Hz min. between terminals and frame
  500 Vrms 50 Hz min. between terminals
- Electrical life at full load :
  - gold plated contacts : 60.000 cycles
  - silver plated contacts : 20.000 cycles

GENERAL SPECIFICATIONS

- Total travel :
  - function 2 : 1 mm (.039)
  - function 3 : 0,8 mm (.031)
- Strength of terminals : pull-out force - 10N max.
- Operating temperature : -30°C to +85°C
- Moisture : 21 days 95 % (NFC 20-603 - IEC 68-2-3)
- Cleaning : solvents or water + detergent
- Wave soldering : 260°C - 5 sec.

MATERIALS

- Case : PBT
- Actuator : polyamide, glass filled
- Contacts and terminals :
  0 : brass, gold plated
  1 : brass, silver plated
  3 : brass, gold plated (1,27 micron gold)
  8 : contact brass, gold plated + tin plated terminals
  9 : contact brass, gold plated (1,27 micron gold) + tin plated terminals
- Terminal seal : epoxy

The company reserves the right to change specifications without notice.

MODEL STRUCTURE

TP			
SERIES	Number of poles	Electrical functions	Terminals

Number of poles

3	Single pole
4	Double pole

Electrical functions

2	ON	-	MOM
3	OFF	-	MOM

Terminals

P0	Straight PC
Y0	Bracket mounting
W0	Right angle, horizontal mounting
WW	Right angle, vertical mounting
MW	Wire-wrap

B2

OPTIONS

Contacts and terminal materials

0	Brass, gold plated
1	Brass, silver plated
3	Brass, gold plated (1,27 micron gold)
8	Contact brass, gold plated + tin plated terminals
9	Contact brass, gold plated (1,27 micron gold) + tin plated terminals (SP only)

Plungers

- Short - standard
- Long
- Flush

Codes : see "Options" pages.

Special options

00	No special requirement
07	Trimmed terminals 3,2 (.125)
08	Extended terminals
18	Switch without ground plate
20	Ground plate with 2 pins
25	Trimmed terminals 5 (.196)
30	Wire-wrap on bracket mounting models
40	With protection cap U3500
50	Crimped ground plate pins

Caps

For long plunger

30	Ø 6,5 (.255) (P/N U4310)
40	Ø 5 (.196) (P/N U4320)

ABOUT THIS SERIES

On the following pages, you will find successively :
- model structure of switches
- options in the same order as in above chart

Dimensions : first dimensions are in mm while inches are shown as bracketed numbers.

NOTICE : please note that not all combinations of above numbers are available.
Refer to the following pages for further information.

Packaging unit : 100 pieces, except for models with WW terminals (50 pieces).

TP series

Tiny washable momentary pushbutton switches

MODEL STRUCTURE

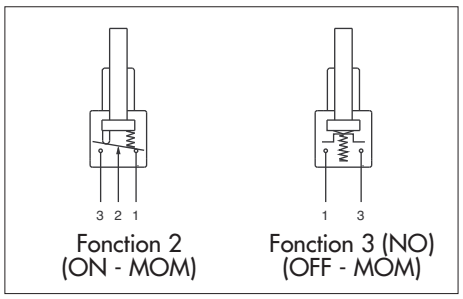

- Straight PC, right angle or wire-wrap terminals
- 1 and 2 pole configurations

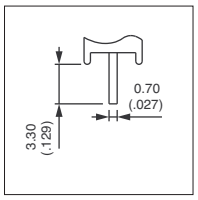

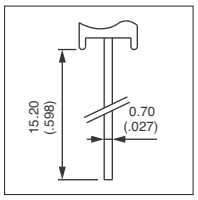

MODEL STRUCTURE

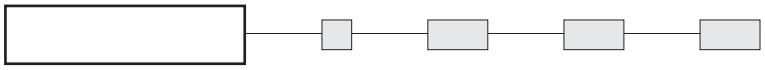

Shown in function 2, with standard plunger

B2

Straight PC terminals : TP..P0

Single pole	Double pole		
TP32P0	**TP42P0**	ON	MOM
TP33P0	**TP43P0**	OFF	MOM

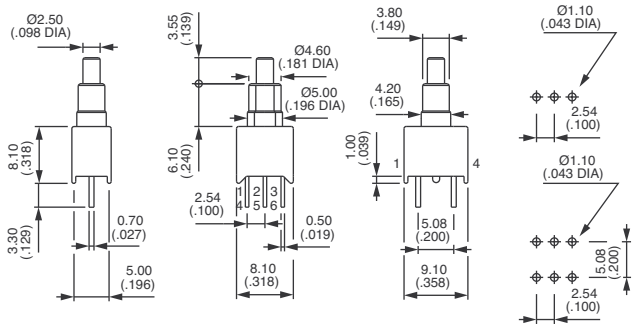

Function 3 has two terminals only (3 and 1) per pole

Straight terminals - bracket mounting : TP..Y0

Single pole	Double pole		
TP32Y0	**TP42Y0**	ON	MOM
TP33Y0	**TP43Y0**	OFF	MOM

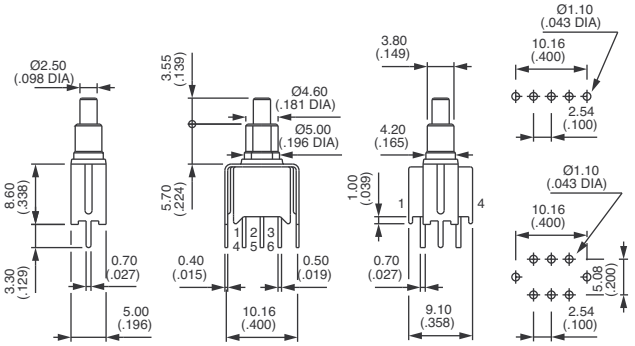

Function 3 has two terminals only (3 and 1) per pole

Right angle terminals - horizontal mounting : TP..W0

Single pole	Double pole		
TP32W0	**TP42W0**	ON	MOM
TP33W0	**TP43W0**	OFF	MOM

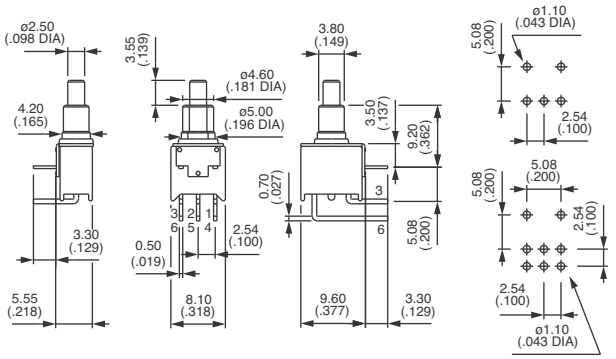

Function 3 has two terminals only (3 and 1) per pole

TP series

Tiny washable momentary pushbutton switches

Shown in function 2, with standard plunger

Right angle terminals - vertical mounting : TP..WW

Single pole	Double pole		
TP32WW	**TP42WW**	ON	MOM
TP33WW	**TP43WW**	OFF	MOM

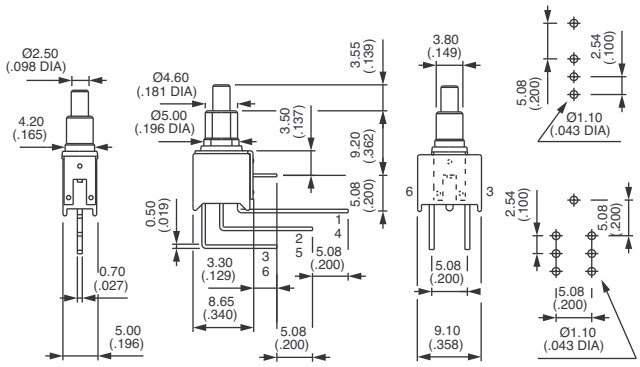

Function 3 has two terminals only (3 and 1) per pole

Wire-wrap terminals : TP..MW

Single pole	Double pole		
TP32MW	**TP42MW**	ON	MOM
TP33MW	**TP43MW**	OFF	MOM

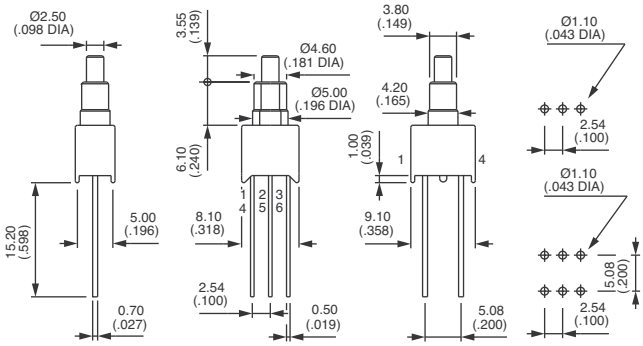

Function 3 has two terminals only (3 and 1) per pole

PCB MOUNTING

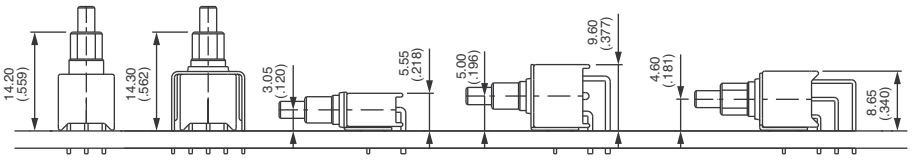

CAP FOR PCB PROCESSING

Provide additional protection during PCB processing.
Supplied separately. For cap mounted on the switch, see special option 40.
Material : vinyl

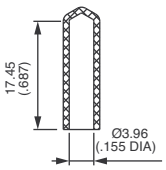

U3502

TP series

Tiny washable momentary pushbutton switches

OPTIONS

CONTACT AND TERMINAL MATERIALS

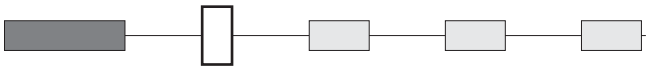

0	Brass, gold plated
1	Brass, silver plated
3	Brass, gold plated (1,27 micron gold)
8	Contact brass, gold plated + tin plated terminals
9	Contact brass, gold plated (1,27 micron gold) + tin plated terminals (single pole only)

B2

PLUNGERS

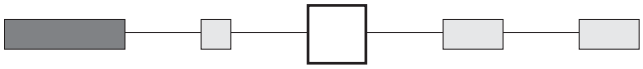

Standard plunger colour is black.

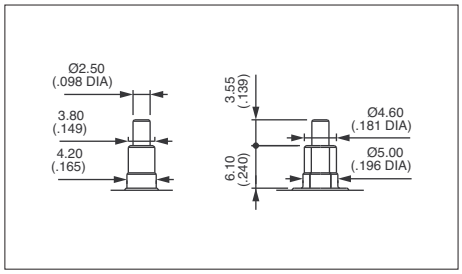

Short - standard

With blue case	With black case
30	**80**

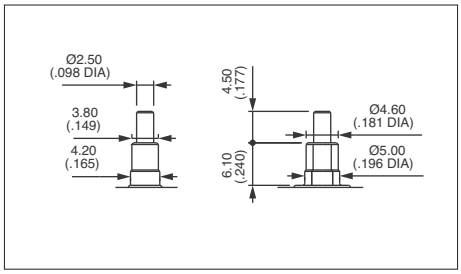

Long

With blue case	With black case
35	**85**

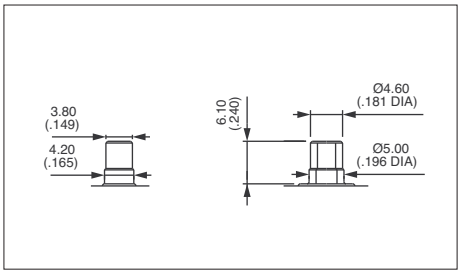

Flush

With black case
82

SPECIAL OPTIONS

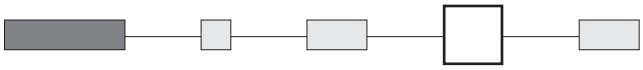

00 No special requirement

07 **Trimmed terminals** - length 3,2 mm (.125) for TP..WW models only

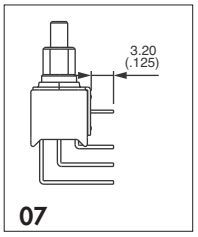

08 **Extended terminals** for TP..W0 models only

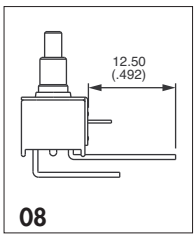

SPECIAL OPTIONS (continued)

18 Switch **without ground plate** for TP..WW models only

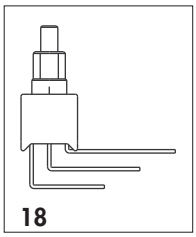

20 **Ground plate with 2 pins** for TP..WW models only

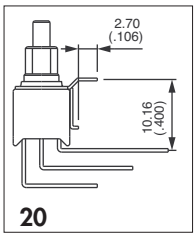

25 **Trimmed terminals** - length 5 mm (.196) for all models, except TP..WW

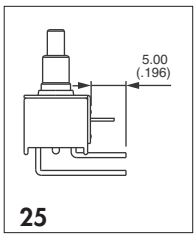

30 **Wire-wrap terminals** on models with mounting **bracket**

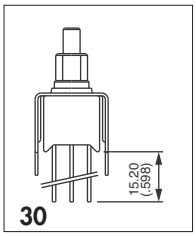

40 With cap U3500 mounted over plunger and bushing
Further protects the switch during PCB processing

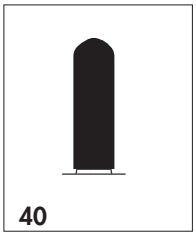

50 **Crimping of ground plate pins**.
Retains switch on PC during handling and wave soldering.
For models TP..W0, TP..WW and TP..Y0 single and double pole.

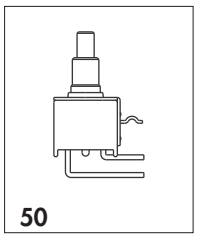

CAPS

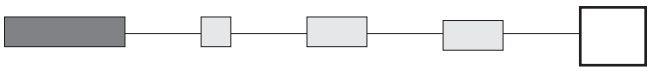

Blank Without cap

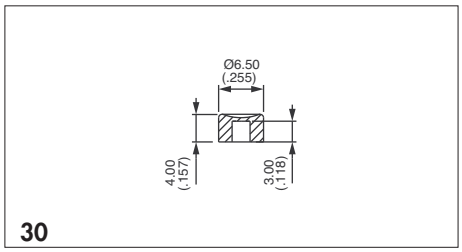

P/N U4310 - for long plunger only

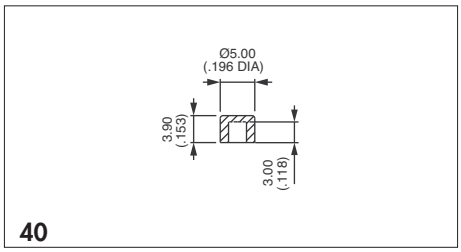

P/N U4320 - for long plunger only

To order caps separately, use their part number (U...).

Cap colours	
Replace "0" by number	
1	blue
1/4	dark blue
2	black
3	green
4	grey
5	yellow
6	red
7	ivory
7/1	white
9	orange

9000 series

Subminiature momentary pushbutton switches

Distinctive features and pecifications

- ❑ **Panel and PC mount models, horizontal or vertical**
- ❑ **Self-cleaning and butt action contacts**
- ❑ **Several plunger options**

B2

ELECTRICAL SPECIFICATIONS

- Max. current/voltage rating with resistive load : 100mA 30VDC
- Initial contact resistance : 30 mΩ max.
- Insulation resistance : 1.000 MΩ min. at 500VDC
- Dielectric strength :
  500 Vrms 50 Hz min. between terminals
  1.000 Vrms 50 Hz min. between terminals and frame
- Electrical life at full load :
  9100 - 9200N and 9500N : 250.000 cycles
  9200 - 9500 : 100.000 cycles

MATERIALS

- Case : Pa6T
- Actuator : polyamide, glass filled
- Bushing : brass, nickel plated
- Contacts :
  CD : brass, gold plated
- Terminal seal : epoxy

GENERAL SPECIFICATIONS

- Torque : 0,5 Nm (.590 Ft.lb) max. applied to nut
- Operating temperature : -30°C to +65°C
- Panel thickness : 1,50 mm (.059) max.
- Travels : see table below
  Tolerance : +/- 0,3 mm (.011)

	9533-9233	9532-9232	9533N 9233N-9133
Total travel	1,10 (.043)	1,80 (.070)	1 (.039)
Pre-travel	0,80 (.031)	1,00 (.039)	-
Over travel	0,30 (.011)	0,75 (.029)	-

The company reserves the right to change specifications without notice.

MODEL STRUCTURE

9 [ ] [ ] [ ] [ ]

SERIES

Number of poles

3	Single pole

Electrical functions

2	Normally closed (NC)
3	Normally open (NO)

Terminals, case and bushing

Case height 8 (.314)

2	Straight terminals - threaded bushing
2..Y	Tall bracket - plain bushing
2..WW	Right angle terminals - plain bushing
5	Solder lugs - threaded bushing

Case height 6,1 (.240)

1	Straight terminals - threaded bushing - 7,10 (.279) PCB to panel
1..Y	Short bracket - plain bushing
1..WW	Right angle terminals - plain bushing
2..N	Straight terminals - threaded bushing - 8,90 (.350) PCB to panel
2..NY	Tall bracket - plain bushing
5..N	Solder lugs - threaded bushing

OPTIONS

[ ] [ ] [ ] [ ] [ ]

Contact materials

CD	Gold plated brass (standard)

Sealing

Blank	Epoxy sealed terminals standard
K	Front panel sealing by two O-rings

Plunger

Blank	Standard
-0	Flush
-4	Long

Caps

For plunger -4

U4310	Height 4 (.157)
U4320	Height 3,9 (.153)

Mounting bezel

U4922
For 9500 model only.

ABOUT THIS SERIES

On the following pages, you will find successively :
- model structure of switches
- their options in the same order as in above chart

Dimensions : first dimensions are in mm while inches are shown as bracketed numbers.

NOTICE : please note that not all combinations of above numbers are available.
Refer to the following pages for further information.

Sealing boots are available to protect the switches. They are presented in section H.

Mounting accessories : standard hardware supplied with all threaded bushing models : 1 nickel plated hex nut 5 (.196) across flats, part number U544. This nut is presented after model structure of switches.

Packaging unit : 100 pieces.

9000 series

Subminiature momentary pushbutton switches

Solder lug or straight PC terminals : 9500 - 9200 - 9200Y

MODEL STRUCTURE

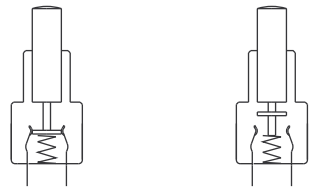

NC (function 2) NO (function 3)

- Case height 8 (.314)
- With over travel
- Self-cleaning contacts
- Epoxy sealed terminals standard

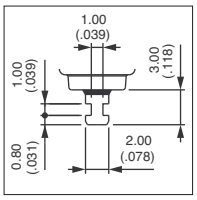

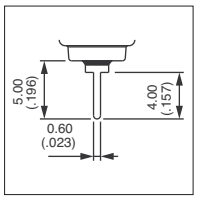

MODEL STRUCTURE

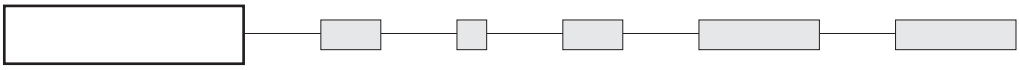

B2

Threaded bushing - solder lugs : 9500

9532		Normally Closed
9533		Normally Open

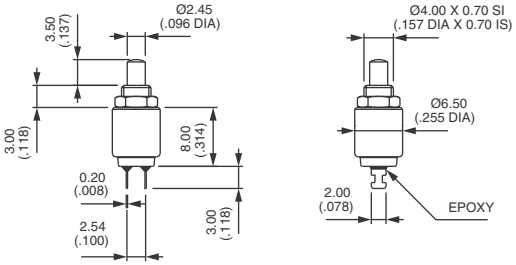

Threaded bushing - straight PC terminals : 9200

9232		Normally Closed
9233		Normally Open

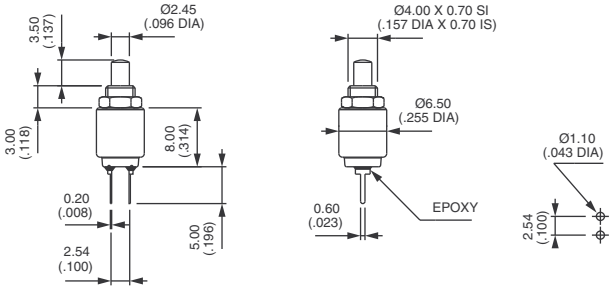

Straight PC terminals - bracket mounting : 9200Y

9232Y		Normally Closed
9233Y		Normally Open

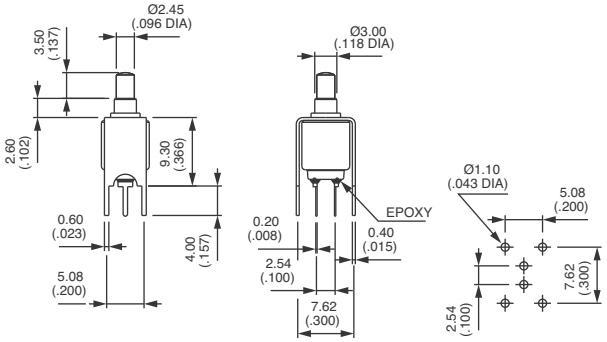

Right angle terminals : 9200WW

9232WW Normally Closed

9233WW Normally Open

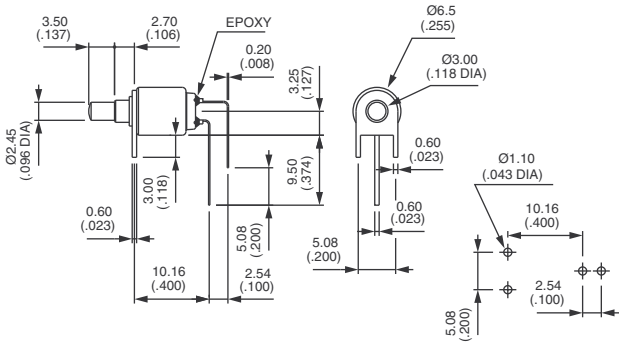

PANEL CUT-OUT

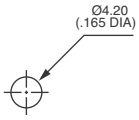

For threaded bushing models.

STANDARD HARDWARE

9500 - 9200

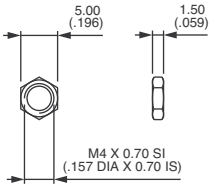

U544 (nickel plated)

9000 series

Subminiature momentary pushbutton switches

Solder lug or straight PC terminals : 9500N - 9200N - 9100

MODEL STRUCTURE

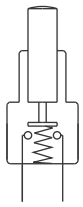

NO
(function 3)

- Case height 6,1 (.240)
- Epoxy sealed terminals
- Butt action contacts

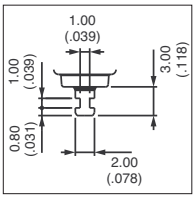

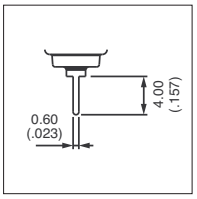

MODEL STRUCTURE

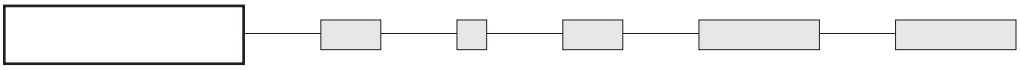

B2

Threaded bushing - solder lugs : 9500N

9533N Normally Open

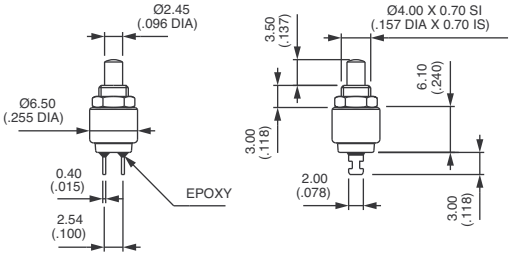

Threaded bushing - straight PC terminals - 8,90 (.350) PCB to panel

9233N Normally Open

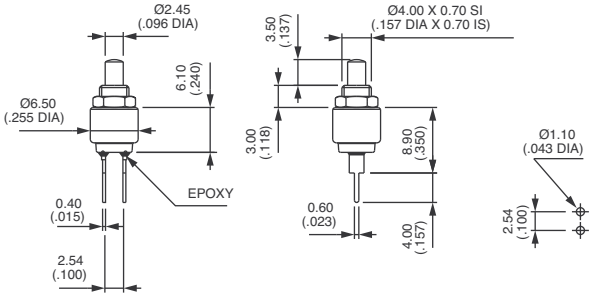

Threaded bushing - straight PC terminals - 7,10 (.279) PCB to panel

9133 Normally Open

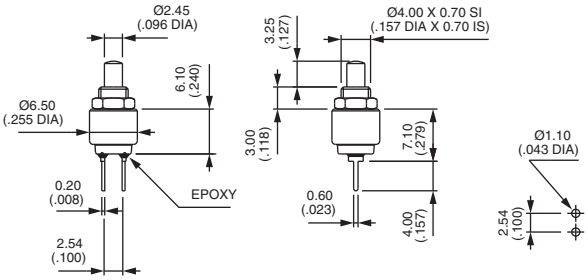

9000 series

Subminiature momentary puhsbutton switches

Straight PC or right angle terminals : 9200NY - 9100Y - 9100WW

Straight PC terminals - tall bracket : 9200NY

9233NY Normally Open

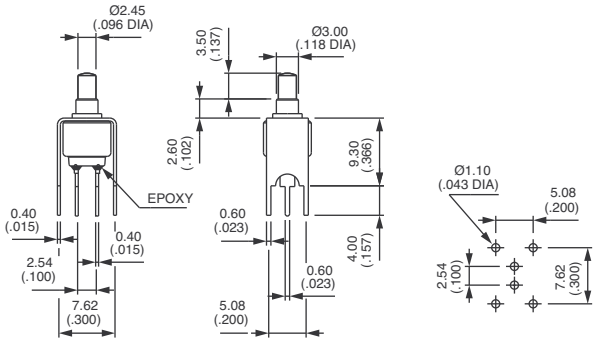

Straight PC terminals - short bracket : 9100Y

9133Y Normally Open

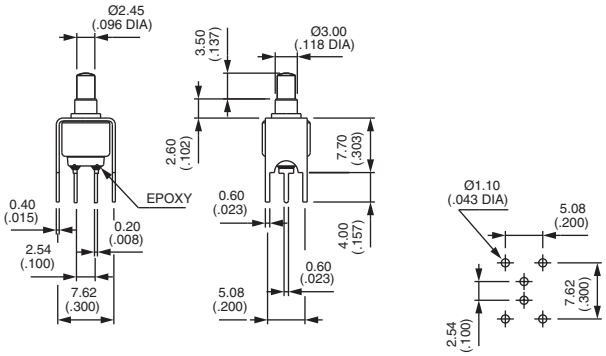

Right angle terminals - vertical : 9100WW

9133WW Normally Open

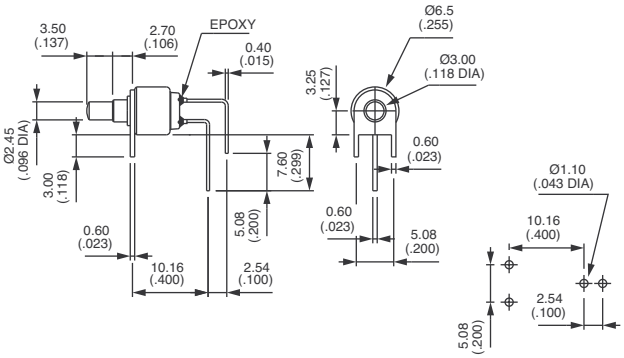

PANEL CUT-OUT

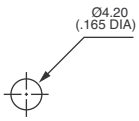

For threaded bushing models.

STANDARD HARDWARE

9500N - 9200N - 9100

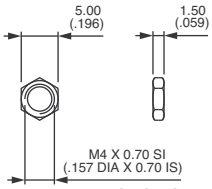

U544 (nickel plated)

9000 series

Subminiature momentary pushbutton switches

OPTIONS

CONTACT MATERIALS

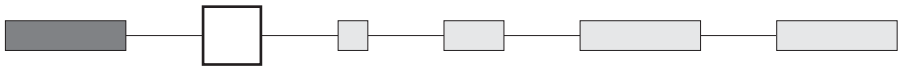

CD Gold plated brass (standard)

SEALING

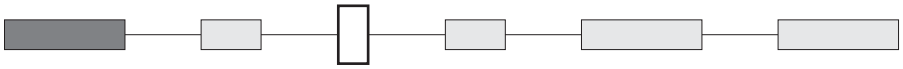

Blank Epoxy sealed terminals standard

K Front panel sealing by two O-rings. Protects the switch against water and dust.
Panel seal withstands 0,1 bar pressure.

Option K for models 9533N, 9233N and 9133 only.

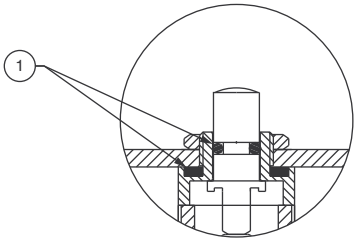

① O-rings

PLUNGERS

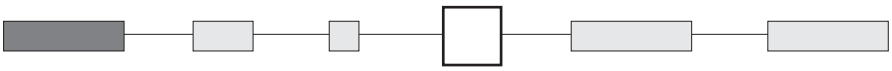

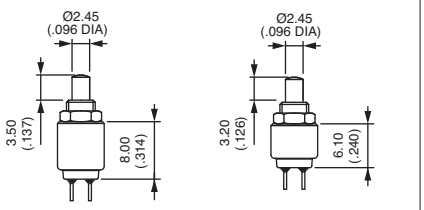

with long case with short case

Standard

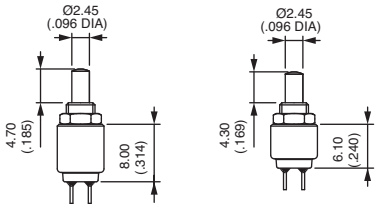

-4 with long case with short case

Long

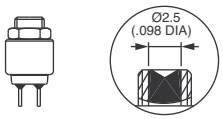

-0

Flush

CAPS

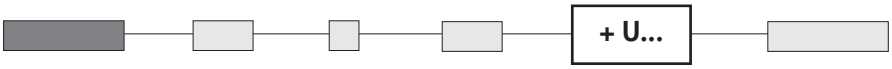

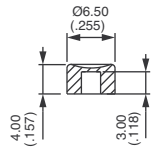

U4310

For use with plunger -4 only

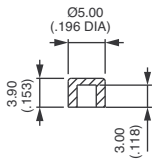

U4320

For use with plunger -4 only

Cap colours	
Replace "0" by number	
1	blue
1/4	dark blue
2	black
3	green
4	grey
5	yellow
6	red
7	ivory
7/1	white
9	orange

MOUNTING BEZEL

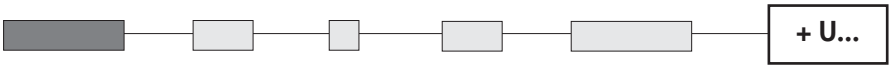

For 9500 model (case height 8 mm) only

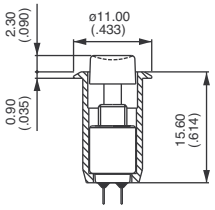

Shown with cap U570.

The mounting bezel U4922 has been designed to facilitate the mounting of the 9500 series pushbutton switch onto a panel. The switch + bezel assembly is snapped into the equipment through the front of the panel, then electrically connected by solder lug terminals.
Panel cut-out : Ø 8,15 mm ± 0,05
(.320 DIA ± .002)

PHAP40 series

Momentary or latching action key switches

Distinctive features and specifications

- ❑ **The smallest latching action switch of the range**
- ❑ **Audible "click"**
- ❑ **Models with 6 x 6 mm case on request**

B2

ELECTRICAL SPECIFICATIONS

- Max. current/voltage rating with resistive load : 100mA 30VDC
- Initial contact resistance : 100 mΩ max.
- Insulation resistance : 100 MΩ min. at 500VDC
- Dielectric strength : 500 Vrms min. (1 min.)
- Electrical life : 10.000 cycles

MATERIALS

- Case : polyamide
- Actuator : polyamide
- Contacts : brass, silver plated

GENERAL SPECIFICATIONS

- Travel : see next page.
- Wave soldering : 255°C, 5 seconds
- Manual soldering : 300°C ± 10°C, 3 seconds
- Operating force :
  - Model PHAP4673 : 1,4N ± 0,5N
  - Models PHAP4683 and PHAP4383V : 2N ± 0,5N
- Operating temperature : -20°C to +70°C

Dimensions : first dimensions are in mm while inches are shown as bracketted numbers.

Packaging unit : 1.000 pieces.

The company reserves the right to change specifications without notice.

PHAP40 series

Momentary or latching action key switches

Straight PC terminals

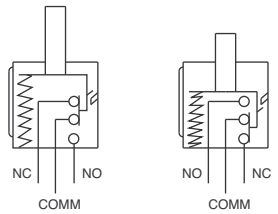

- Double pole, double throw
- Non-shorting contacts
- Moulded-in terminals

MODEL STRUCTURE

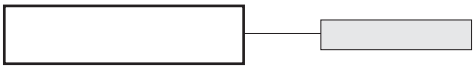

B2

7 x 7 mm case

PHAP4673 ON - ON

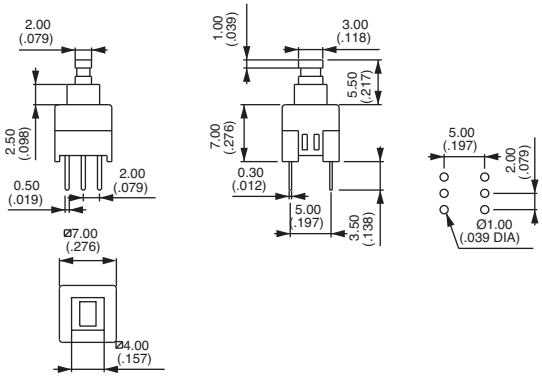

Pre-travel : 1 mm - Total travel : 1,8 mm

8,4 x 8,4 mm case

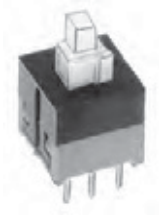

1-2		2-3
4-5		5-6
PHAP4683	ON -	ON
PHAP4383V *	ON -	MOM

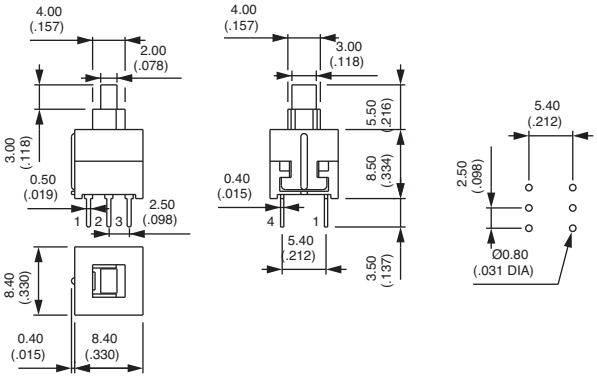

Total travel : 2,5 mm * Audible click

CAPS

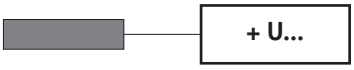

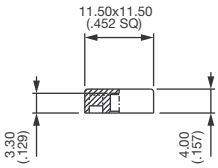

U4520 (square)

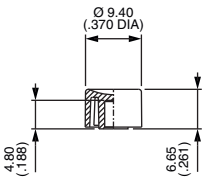

U4530

Cap colours

Remplace "0" by number :

1	blue
2	black
3	green
4	grey
5	yellow
6	red
7	ivory
7/1	white
9	orange

SP series

Washable snap-action pushbutton switches

Distinctive features and specifications

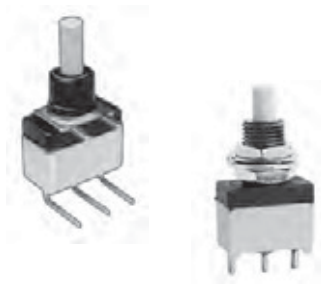

❑ Process sealed
- Secure assembly of the two case parts
- Internally sealed bushing
- Epoxy sealed terminals

❑ Process compatible (plain bushing models)
- Wave solderable
- Washable

B2

ELECTRICAL SPECIFICATIONS

- Max. current/voltage rating with resistive load :
  - gold plated brass contacts : 100mA 30VDC
  - silver or gold plated silver contacts : 1A 30VDC
- Initial contact resistance : 50 mΩ max.
- Insulation resistance : 1.000 MΩ min.
- Dielectric strength : 1.000 Vrms 50 Hz min.
- Electrical life : 60.000 cycles

MATERIALS

- Case and cover : UL94-V0, polyamide, glass filled or PES
- Actuator : polyamide, glass filled
- Contacts
  - **0** : brass, gold plated
  - **1** : silver
  - **2** : silver, gold plated
- Terminal seal : epoxy

GENERAL SPECIFICATIONS

- Torque : 0,25 Nm (.18 Ft.lb) applied to nut (threaded bushing)
- Total travel : 0,50 mm (.019)
- Mechanical strength :
  Terminals are strengthened by a bracket or a ground plate ensuring the rigidity of the switch on the board. Actuator strength is 10N max.
- Operating temperature : -20°C to +85°C
- Storage temperature : -40°C to +85°C
- Moisture :
  The insulating materials employed and the complete seal permit the switches to withstand a 56 days moisture test (IEC 68-2-3).
- Soldering - thermal shock (plain bushing models only) :
  The switches are especially designed for flow soldering at 260°C during 5 seconds owing to high temperature polymer parts.
- Iron soldering (threaded bushing models) : 300°C max., 5 seconds max.
- Solderability : The switches are tested at 235°C according to IEC 68-2-20 after accelerated aging.

AGENCY APPROVAL

1A 120VAC

Availability : all models with silver or gold plated silver contacts.

Marking : to order switches marked UL , complete appropriate box of ordering format.

The company reserves the right to change specifications without notice.

MODEL STRUCTURE

SP			
SERIES	Number of poles	Electrical function	Terminals

Number of poles

3	Single pole
4	Double pole

Electrical function

5	ON	-	MOM

Terminals

P0	Straight PC
Y0	Straight PC and bracket mounting
W0	Right angle, horizontal mounting
WW	Right angle, vertical mounting
SO	Solder lug terminals, (threaded bushing)

OPTIONS

Contact and terminal materials

0	Brass, gold plated
1	Silver
2	Silver, gold plated

Plungers

00	Standard
02	Short

Options/Approval

00	Standard model
01	UL marking on standard model
02	UL marking on threaded bushing model (SP only)
76	Short bushing for plunger 02 (SP only)
77	Threaded bushing

Caps (mounted)

10	Ø 5 (.196)
20	Ø 8 (.314)
30	Ø 9,4 (.370)
40	Ø 10 (.393)
80	Ø 15 (.590)
70	Square Height 4 (.157)
50	Square Height 6 (.236)

ABOUT THIS SERIES

On the following pages, you will find successively :
- model structure of switches
- options in the same order as above

Specifications are on previous page.

Dimensions : first dimensions are in mm while inches are shown as bracketed numbers.

Mounting accessories : standard hardware supplied with all models with Ø 6,35 (1/4) threaded bushing : 2 hex nuts 8 mm (.314) across flats, 1 locking ring and 1 lockwasher.
Standard and special hardware available are presented in section I.

Packaging unit : 25 or 50 pieces depending on model.

SP series

Washable snap-action pushbutton switches

Plain or threaded bushing

MODEL STRUCTURE

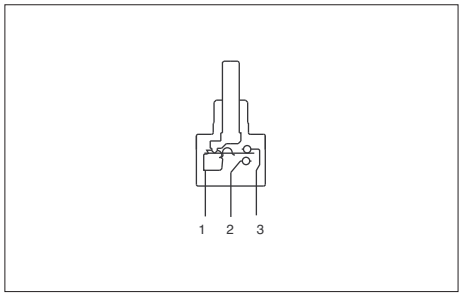

- Solder lug, straight PC or right angle terminals
- Features of threaded bushing models :
  - max. torque : 0,25 Nm (.18 Ft.lb)
  - iron soldering : 300°C max., 5 seconds max.
- 1 and 2 pole configurations

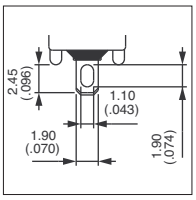

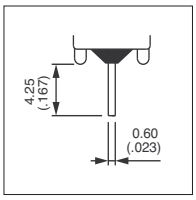

MODEL STRUCTURE

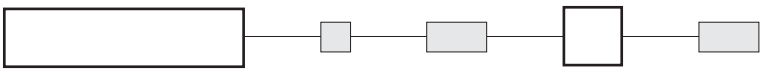

Shown with standard plunger

B2

Plain bushing - straight PC terminals

	1-3		1-2
Single pole			
SP35P0... 00	ON	-	MOM
Double pole			
SP45P0... 00	ON	-	MOM

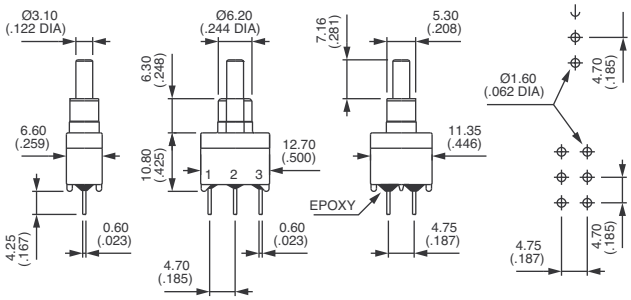

Plain bushing - bracket mounting

	1-3		1-2
Single pole			
SP35Y0... 00	ON	-	MOM
Double pole			
SP45Y0... 00	ON	-	MOM

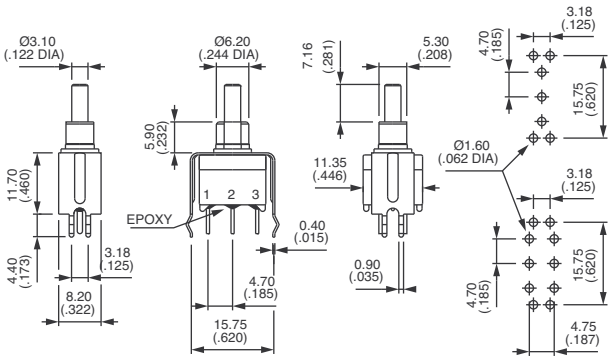

Plain bushing - right angle terminals - horizontal

	1-3		1-2
Single pole			
SP35W0... 00	ON	-	MOM
Double pole			
SP45W0... 00	ON	-	MOM

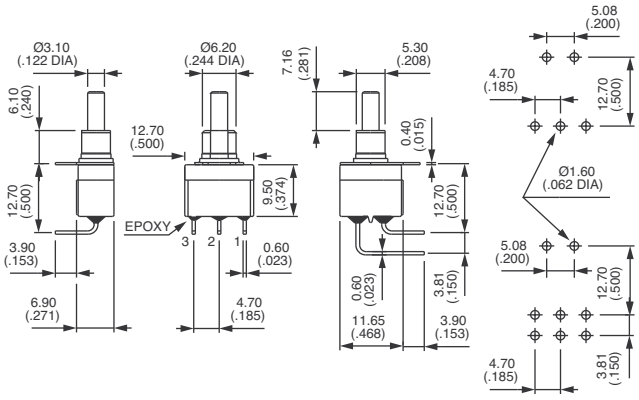

SP series

Washable snap-action pushbutton switches

Plain or threaded bushing

Shown with standard plunger

Plain bushing - right angle terminals - vertical

	1-3		1-2
Single pole			
SP35WW... 00	ON	-	MOM
Double pole			
SP45WW... 00	ON	-	MOM

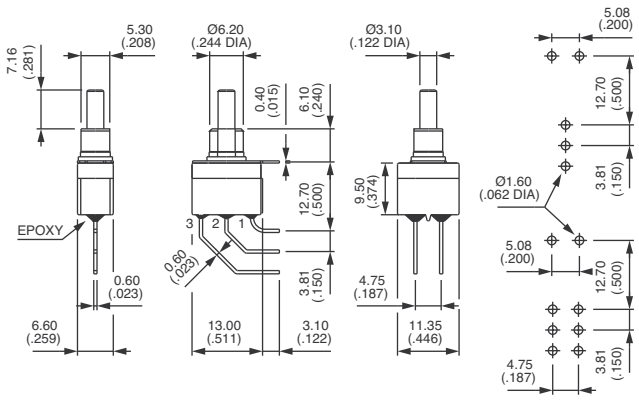

Threaded bushing - solder lug terminals

→ Keyway

	1-3		1-2
Single pole			
SP35S0... 77	ON	-	MOM

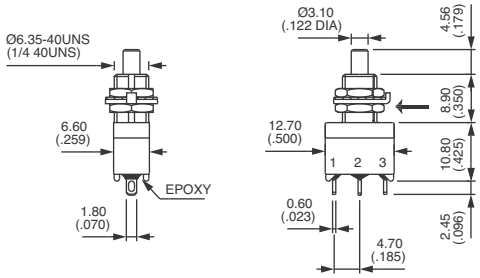

Threaded bushing - straight PC terminals

→ Keyway

	1-3		1-2
Single pole			
SP35P0... 77	ON	-	MOM

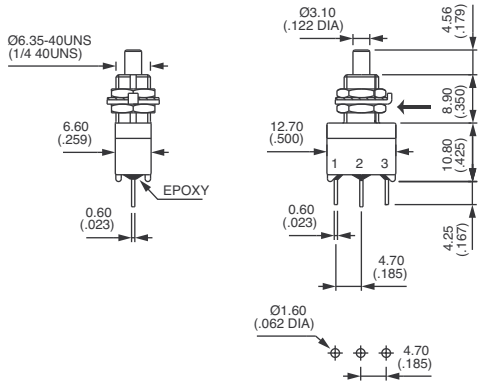

PANEL CUT-OUT

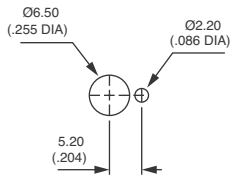

CONTACT AND TERMINAL MATERIALS

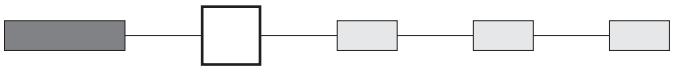

0	Brass, gold plated
1	Silver
2	Silver, gold plated

PLUNGERS

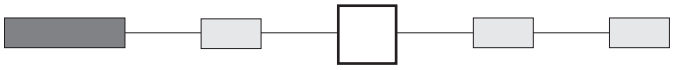

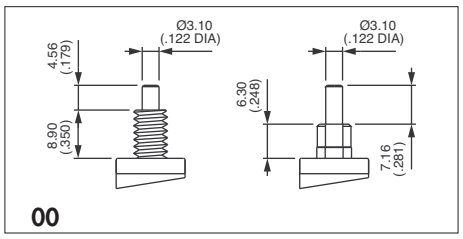

Standard plunger

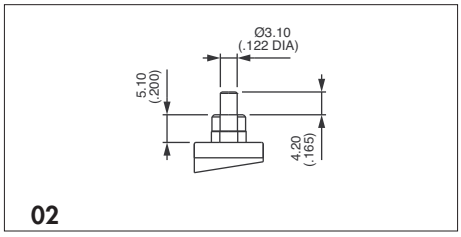

Short (for models with plain bushing, single pole only)
Order with option 76 below.

OPTIONS / AGENCY APPROVAL

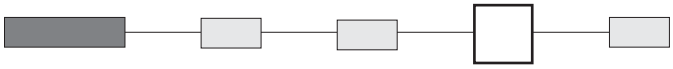

00	Standard model
01	UL marking for standard model
02	UL marking for threaded bushing model (single pole models only)
76	Short plain bushing for 02 plunger (single pole models only)
77	Threaded bushing (included in model numbers on previous page)

CAPS

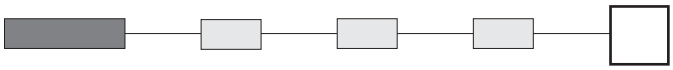

Blank Without cap

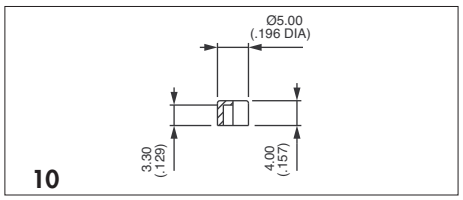

P/N U2400

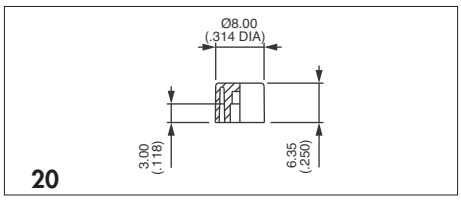

P/N U2510

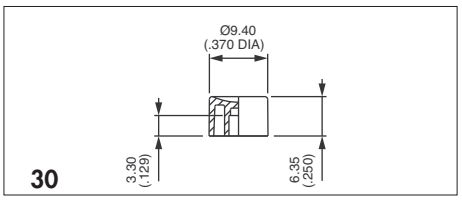

P/N U2130

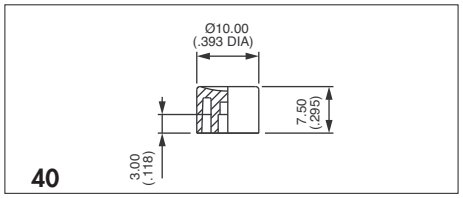

Standard - P/N U2900

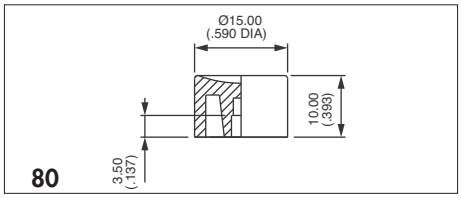

P/N U3400
Not available with plunger 02

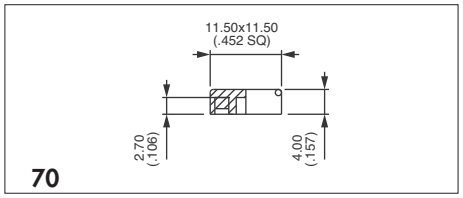

Square - P/N U910

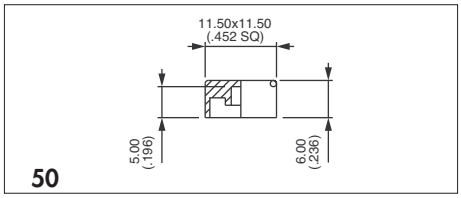

Square - P/N U2340
Not available with plunger 02

Cap colours	
Replace last "0" by number	
1	blue
1/4	dark blue
2	black
3	green
4	grey
5	yellow
6	red
7	ivory
7/1	white
9	orange

To order caps separately, use their P/N (U...) (for threaded bushing order only separately).

DRESS NUTS

Chrome plated

For threaded bushing models only.

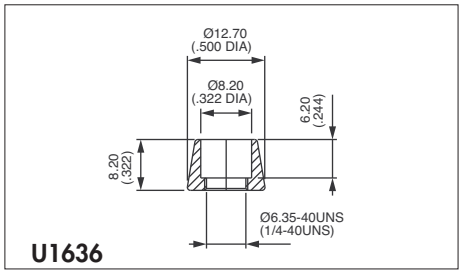

For cap U2510

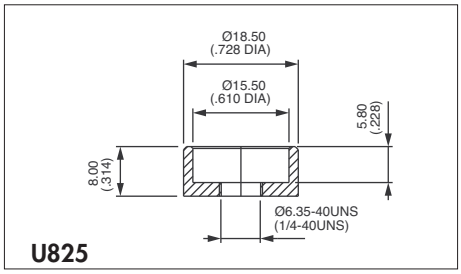

For cap U3400

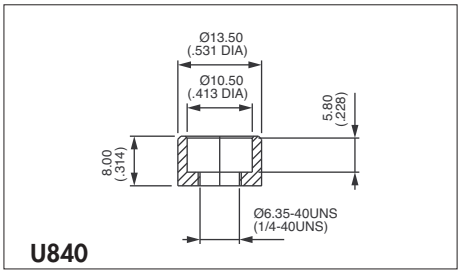

For cap U2900

Dress nuts are to be ordered separately.

8000 series

Momentary or alternate action pushbutton switches

Distinctive features and specifications

- ❑ **Bushing Ø 6,35 (1/4) and Ø 11,9 (15/32)**
- ❑ **UL approved**

B2

ELECTRICAL SPECIFICATIONS

- Max. current/voltage rating with resistive load :
  - silver contacts : 4A 30VDC
  - gold plated contacts : 0,4VA max. 20VAC or DC
- Initial contact resistance : 10 mΩ max.
- Insulation resistance : 1.000 MΩ min. at 500VDC
- Dielectric strength :
  1.000 Vrms 50 Hz min. between terminals
  2.000 Vrms 50 Hz min. between terminals and frame
- Electrical life : 30.000 cycles at full load

MATERIALS

- Case : diallylphthalate (DAP)
- Actuator : brass, nickel plated
- Bushing : brass, nickel plated
- Housing : stainless steel
- Contacts
  A : silver
  AD : silver, gold plated
  CD : brass, gold plated
- Terminal seal : epoxy

GENERAL SPECIFICATIONS

- Torque : 1,25 Nm (.922 Ft.lb) max. applied to nut
- Total travel : 2,70 mm (.106)
- Operating temperature : -40°C to +85°C

AGENCY APPROVAL

3A 250VAC, 6A 125VAC

Availability : consult factory for details of approved models.

Marking : to order switches marked UL, complete appropriate box of ordering format.

The company reserves the right to change specifications without notice.

MODEL STRUCTURE

8				
SERIES	Terminals and bushings	Number of poles	Electrical functions	Terminals

Terminals and bushings

- **4** Straight PC or right angle terminals
- **6** Solder lug terminals

All models with Ø 6,35 (1/4) or Ø 11,9 (15/32) threaded bushing.

Number of poles

- **3** Single pole
- **4** Double pole

Electrical functions

- **2** ON - MOM
- **6** ON - ON

Terminals

- **Blank** Solder lugs or straight PC depending on model
- **W** Right angle

B2

OPTIONS

Order separately.

Contact materials

- **A** Silver
- **AD** Silver, gold plated
- **CD** Brass, gold plated

Sealing

- **Blank** No sealing
- **B** Epoxy sealed terminals
- **K** Front panel sealing by O-ring and sealing washer

Plungers

For bushing Ø 6,35 (1/4)
- **Blank** Height 6,3 (.248)
- **-9** Height 8,8 (.346)

For bushing Ø 11,9 (15/32)
- **Blank** Height 8,6 (.338)
- **-6** Height 7 (.275)

Special options

- **X718** Bushing Ø 11,9 (15/32)
- **X934** Flatted bushing Ø 11,9 (15/32) + front panel sealing

Other, see following pages.

Approval

UL
Availability : Consult factory for details of approved models.

Caps

- **U900** Ø 5 (.196)
- **U1140** Ø 8 (.314)
- **U1720** Ø 9,4 (.370)
- **U480** Ø 10 (.393) Standard
- **U630** Ø 15 (.590)
- **U2430** Square Height 4 (.157)
- **U2020** Square Height 6 (.236)

ABOUT THIS SERIES
On the following pages, you will find successively :
- model structure of switches
- options in the same order as in above chart

Dimensions : first dimensions are in mm while inches are shown as bracketed numbers.

Sealing boots are available to protect the switches against dust and water. They are presented in section H.

Mounting accessories : standard hardware supplied with all models : 2 hex nuts 8 mm (.314) across flats, 1 locking ring and 1 lockwasher.
Standard and special hardware available are presented in section I.

Packaging unit : 50 pieces, except 8000W (25 pieces).

8000 series

Momentary or alternate action pushbutton switches

Threaded bushing Ø 6,35 (1/4)

MODEL STRUCTURE

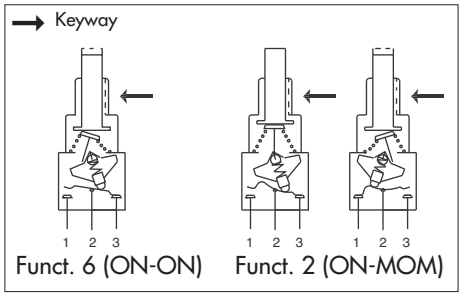

- Solder lug, straight PC or right angle terminals
- 1 and 2 pole configurations
- Button returns in upper position after actuation.

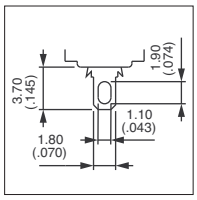

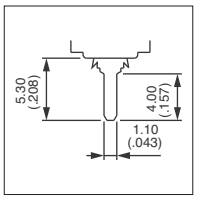

MODEL STRUCTURE

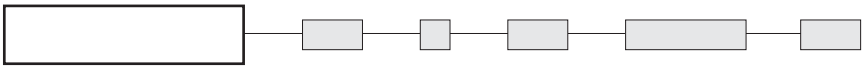

Shown with standard plunger

B2

Solder lug terminals : 8600

	2-3	1-2
Single pole		
8632	ON	MOM
8636	ON	ON
	2-3	1-2
	5-6	4-5
Double pole		
8642	ON	MOM
8646	ON	ON

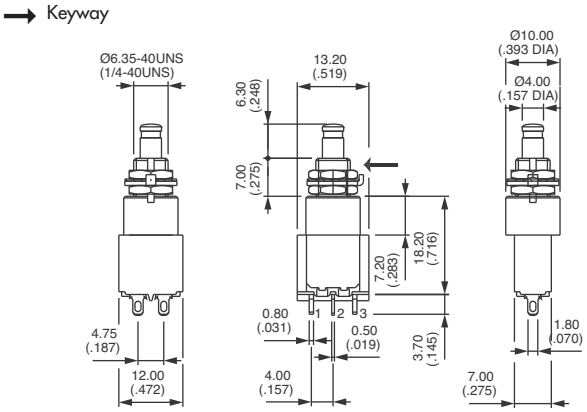

Straight PC terminals : 8400

	2-3	1-2
Single pole		
8432	ON	MOM
8436	ON	ON
	2-3	1-2
	5-6	4-5
Double pole		
8442	ON	MOM
8446	ON	ON

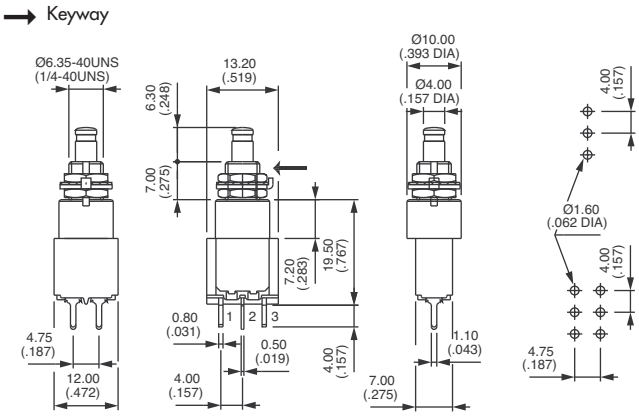

Right angle terminals - horizontal : 8400W

	2-3	1-2
Single pole		
8432W	ON	MOM
8436W	ON	ON
	2-3	1-2
	5-6	4-5
Double pole		
8442W	ON	MOM
8446W	ON	ON

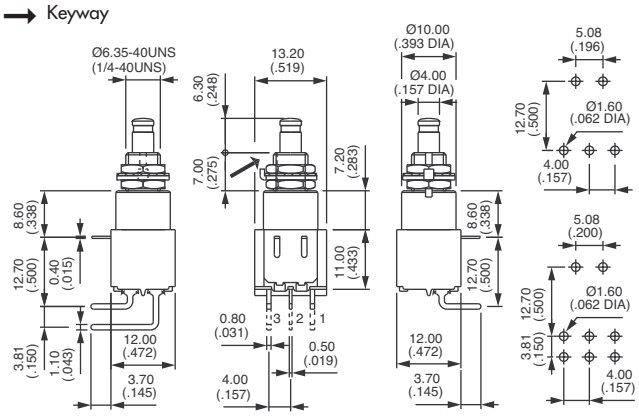

PANEL CUT-OUT

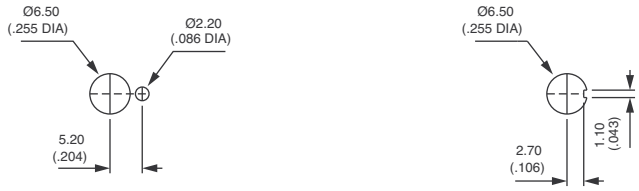

Standard

With **K** sealing option

CONTACT MATERIALS

A Silver
AD Silver, gold plated
CD Brass, gold plated

SEALING

Blank No sealing

B Epoxy sealed terminals

K Front panel sealing by one O-ring and sealing washer. Protects the switch against water and dust.
Panel seal withstands 1 bar pressure.

KB Combined sealings

Sealing boot : see section H.

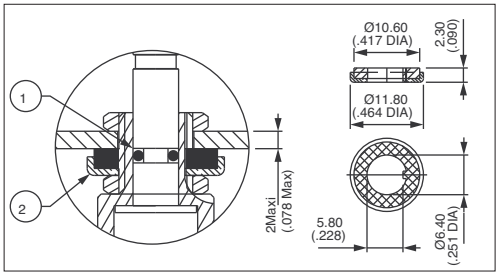

① O-ring
② Sealing washer

8000 series

Momentary or alternate action pushbutton switches

OPTIONS

PLUNGERS

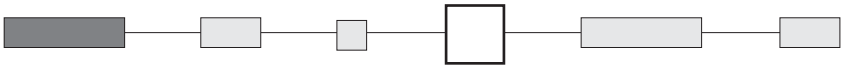

For Ø 6,35 (1/4) bushing

Dash compulsory before plunger code.

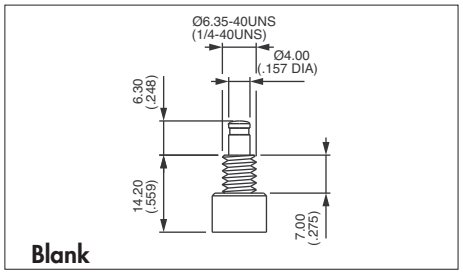

Blank
Standard

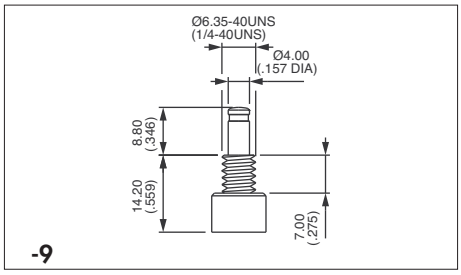

-9

For Ø 11,9 (15/32) bushing (X718 models)

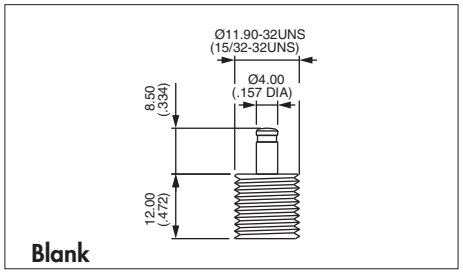

Blank

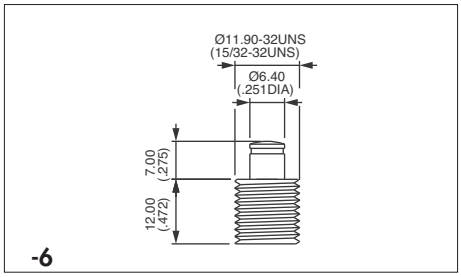

-6

SPECIAL OPTIONS

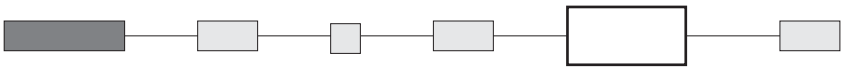

X601 **Silver plated brass contacts**
Current/voltage rating for an electrical life of 20.000 cycles : 0,5A 30VDC.
Minimum quantity : 5.000 pieces per model and shipment.

X718 **Bushing Ø 11,9 (15/32)**
For all basic models (solder lug straight PC or right angle terminals)
Available with plungers 13 and 6.
K sealing option available.

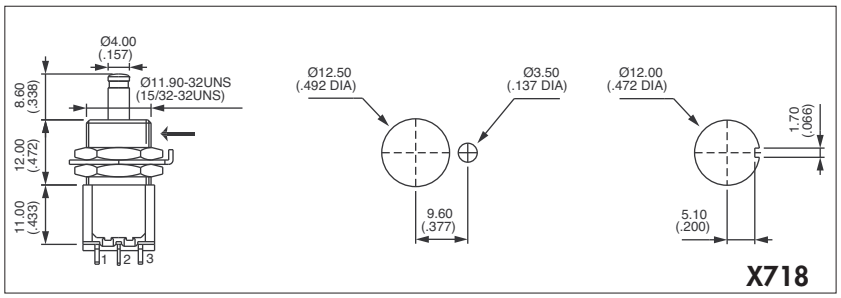

X718

X748 Snap-in mounting. Consult factory
Panel cut-out 15 x 12,5 (.59 x .492)

X934 Flatted bushing Ø 11,9 (15/32) + sealing by two O-rings (for plunger -6 only). Epoxy sealed terminals.

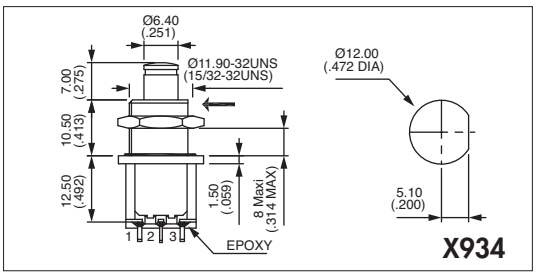

X934

APPROVAL

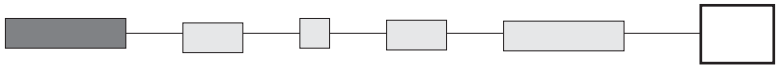

UL

Availability : consult factory for details of approved models.
Marking : to order switches marked UL, complete above box with "UL".

CAPS

Order separately.

The caps below are for Ø 4 mm plungers (standard and -9), except U2600.

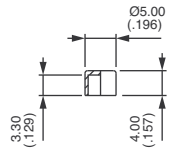

U900

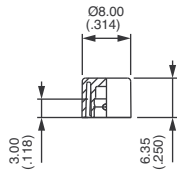

U1140

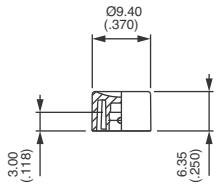

U1720

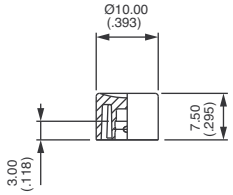

U480
Standard

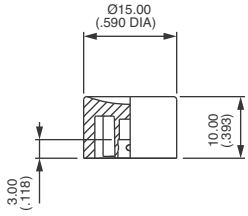

U630

Cap colours			
Replace last "0" by number			
1	blue	**5**	yellow
1/4	dark blue	**6**	red
2	black	**7**	ivory
3	green	**7/1**	white
4	grey	**9**	orange

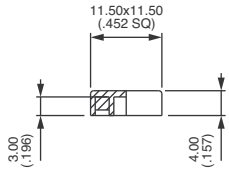

U2430
Square

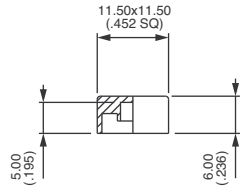

U2020
Square

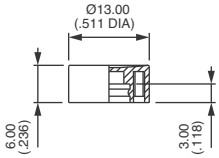

U2600
For large plunger -6 only.

DRESS NUTS

Chrome plated. Order separately.

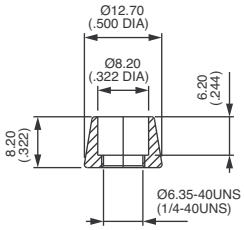

U1636
For cap U1140

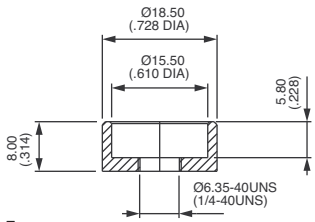

U825
For cap U630

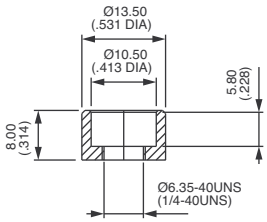

U840
For cap U480

9000 series

Momentary pushbutton switches

Distinctive features and specifications

- ❑ **Two case lengths**
- ❑ **Three electrical functions**
- ❑ **Sealing options**
- ❑ **Model X1146 with Ø 16 (.630) bushing**

B2

ELECTRICAL SPECIFICATIONS

- Max. current/voltage rating with resistive load :
  - silver contact (A) : 1A 30VDC
  - gold plated contacts (CD) : 100mA 30VDC
- Initial contact resistance : 50 mΩ max.
- Insulation resistance : 1.000 MΩ min. at 500VDC
- Dielectric strength :
  1.000 Vrms 50 Hz min. between terminals
  1.500 Vrms 50 Hz min. between terminals and frame
- Electrical life : 250.000 cycles

MATERIALS

- Case : thermoplastique UL94-V0
- Actuator : polyamide, glass filled
- Bushing : brass, nickel plated
- Contacts :
  A : silver
  CD : brass, gold plated
- Terminal seal : epoxy

GENERAL SPECIFICATIONS

- Total travel :

9600-9400-9400Y		9600N-9400N
Functions 3 and 5	Function 2	Function 3
1,3 mm	2 mm	0,9 mm

- Torque : 1,25 Nm (.922 Ft.lb) max. applied to nut
- Operating temperature : -30°C to +65°C

The company reserves the right to change specifications without notice.

MODEL STRUCTURE

9 [ ] [ ] [ ] [ ]

SERIES

Number of poles

3	Single pole

Electrical functions

2	Normally closed (NC)
3	Normally open (NO)
5	Combined (NC/NO)

Terminals, case and bushing

Case length 11,2 (.440) All models have Ø 6,35 (1/4) threaded bushing.

4	Straight PC terminals
6	Solder lug terminals
4..Y	Straight PC terminals, bracket mounting

Case length 8,5 (.334)

4..N	Straight PC terminals
6..N	Solder lug terminals
6..NZ1	Quick-connect terminals

OPTIONS

Contact materials

A	Silver
CD	Brass, gold plated

Sealing

B	Epoxy sealed terminals (standard)
KB	Front panel sealing by two O-rings - not available with 9400Y.

Special options

X1146	Bushing Ø 16 (.630)
X601	Special contact, lower rating

Caps

U900	Ø 5 (.196)
U1140	Ø 8 (.314)
U1720	Ø 9,4 (.370)
U480	Ø 10 (.393) standard
U630	Ø 15 (.590)
U2430	Square - Height 4 (.157)
U2020	Square - Height 6 (.236)

ABOUT THIS SERIES

On the following pages, you will find successively :
- model structure of switches
- their options in the same order as in above chart

Dimensions : first dimensions are in mm while inches are shown as bracketed numbers.

NOTICE : please note that not all combinations of above numbers are available.
Refer to the following pages for further information.

Sealing boots are available to protect the switches against dust and water. They are presented in section H.

Mounting accessories : standard hardware supplied with all switches : 2 hex nuts 8 mm (.314) across flats and 1 lockwasher.
Standard and special hardware available are presented in section I.

Packaging unit : 50 pieces, except for 9400Y (25 pieces)

9000 series

Momentary pushbutton switches

9600 - 9400 - 9400Y

MODEL STRUCTURE

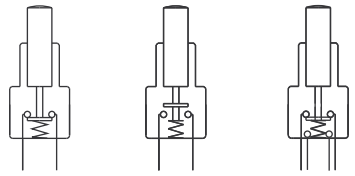

- Single pole
- Solder lug or straight PC terminals
- Epoxy sealed terminals

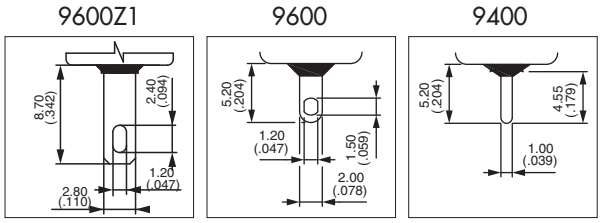

MODEL STRUCTURE

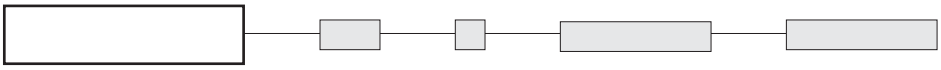

B2

Solder lug terminals - case length 11,2 (.440) : 9600

9632B		Normally Closed
9635B		Combined function

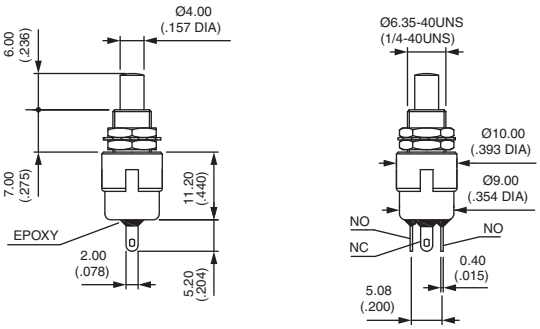

For Normally Open (function 3), see next page.

Straight PC terminals - case length 11,2 (.440) : 9400

9432B		Normally Closed
9433B		Normally Open
9435B		Combined function

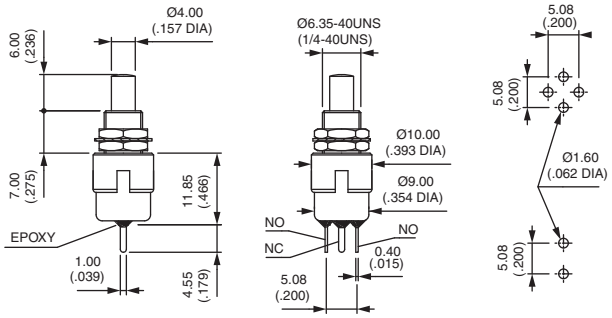

Bracket mounting - case length 11,2 (.440) : 9400Y

9432YB		Normally Closed
9433YB		Normally Open
9435YB		Combined function

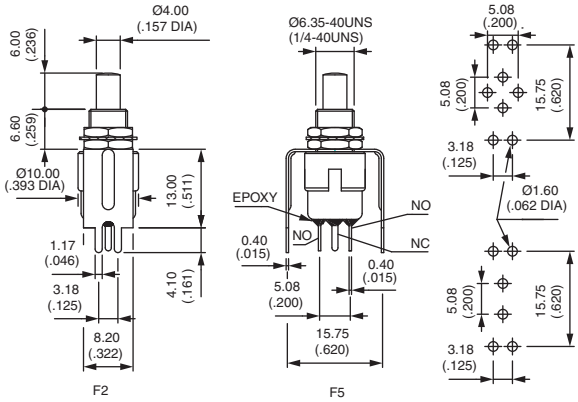

The bracket is not fastened to the switch.

Solder lug terminals - case length 8,5 (.334) : 9600N

9633NB Normally Open

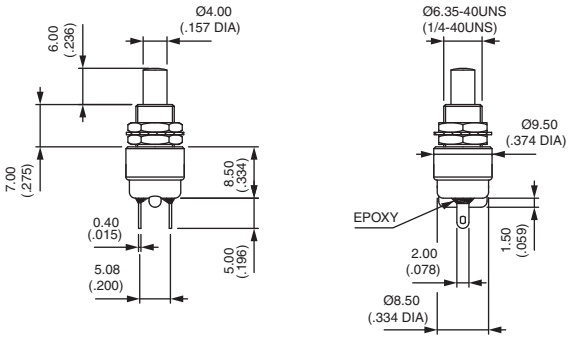

Also available with quick-connect terminals 2,8 x 0,5 mm : **9633NZ1**

B2

Straight PC terminals - case length 8,5 (.334) : 9400N

9433NB Normally Open

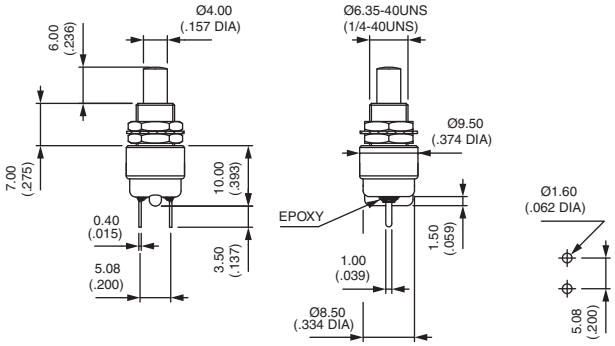

PANEL CUT-OUT

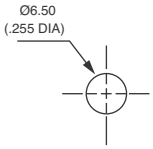

Bushing Ø 16 (.630) - metal button : 9633•X1146

Silver contacts
9633ABX1146 Normally open

Gold plated silver contacts
9633ADBX1146 Normally open

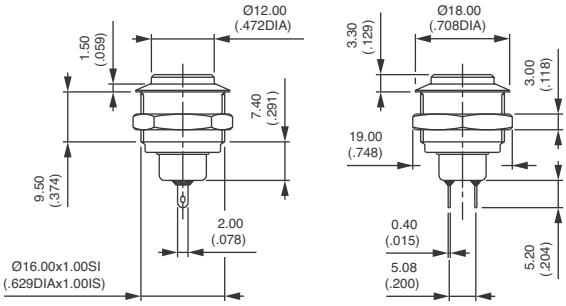

Panel cut-out : Ø 16,2 (.637)
Max. current/voltage rating. : 1A 30VDC
Epoxy sealed terminals. Options of the following pages not applicable.

Hex nut 19 (.748) across flats

CONTACT MATERIALS

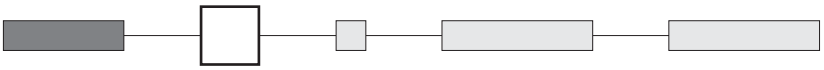

A Silver
CD Brass, gold plated

Special contact, lower rating : see X601 under "Special options".

SEALING

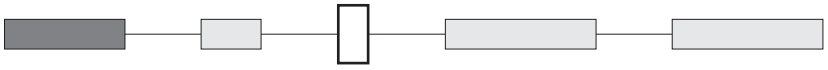

B Epoxy sealed terminals (standard)

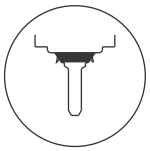

KB Combined sealings
Epoxy sealed terminals + front panel sealing by two O-rings.
Protects the switch against water and dust.
Panel seal withstands 0,1 bar pressure.

Option KB not available on 9400Y model.

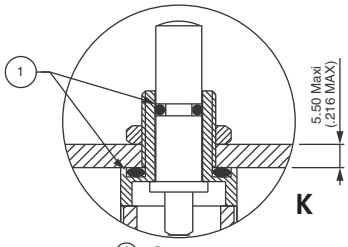

① O-rings

Sealing boots : see section H.

SPECIAL OPTIONS

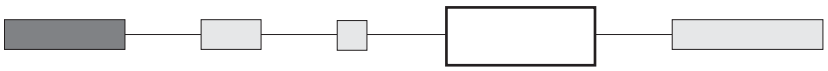

X601 **Silver plated brass contacts**
Current/voltage rating for an electrical life of 20.000 cycles : 0,5A 30VDC.
Minimum quantity : 5.000 pieces per model and shipment.

X1146 **Model with dia. 16 (.630) bushing and metal plunger**
See previous page.

CAPS

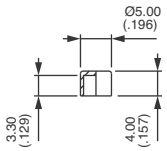

U900

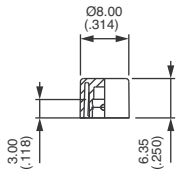

U1140

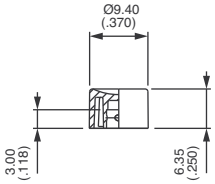

U1720

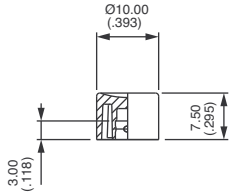

U480

Standard

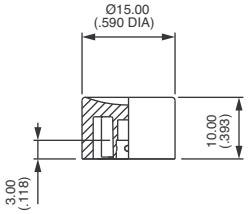

U630

Cap colours	
Replace last "0" by number	
1	blue
1/4	dark blue
2	black
3	green
4	grey
5	yellow
6	red
7	ivory
7/1	white
9	orange

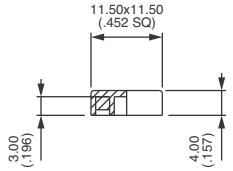

U2430

Square

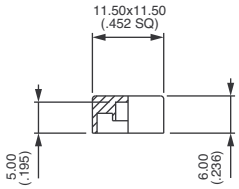

U2020

Square

DRESS NUTS

Chrome plated. Order separately.

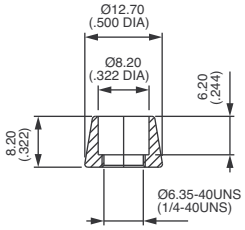

U1636

For cap U1140

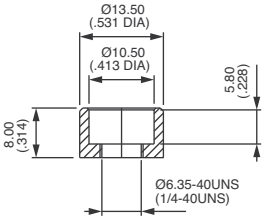

U840

For cap U480

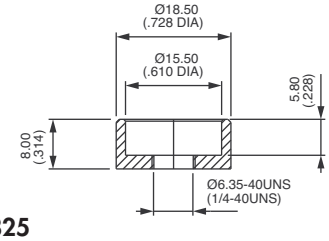

U825

For cap U630

9000 series

Alternate action or momentary pushbutton switches

Distinctive features and specifications

- ❑ **Bushing Ø 6,35 (1/4) and 11,9 (15/32)**
- ❑ **Two electrical functions**

B2

ELECTRICAL SPECIFICATIONS

- Max. current/voltage rating with resistive load and electrical life :
  - silver contacts (A) : 1A 28VDC - 250.000 cycles
    3A 28VDC - 10.000 cycles
  - gold plated contacts (CD) : 0,4VA 20V max. AC or DC
- Initial contact resistance : 10 mΩ max. at 0,1A 3VDC
- Insulation resistance : 10.000 MΩ min.
- Dielectric strength :
  1.000 Vrms 50 Hz min.

MATERIALS

- Case : diallylphthalate
- Actuator : nylon
  black for series 9630M
  white for series 9631
- Bushing : brass, nickel plated
- Contacts :
  A : silver
  CD : brass, gold plated
- Terminal seal : epoxy

GENERAL SPECIFICATIONS

- Operating temperature : -30°C to +85°C
- Travels : see table below.

MODELS	**9631**	**9633M**
Total travel	3,48 (.137)	2,79 (.110)
Pre-travel	0,66 (.026)	-
Over travel	2,69 (.106)	0,51 (.020)

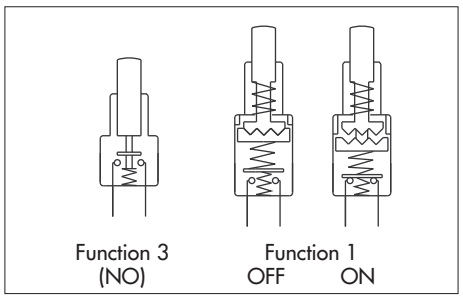

- Single pole
- Solder lug terminals
- Epoxy sealed terminals

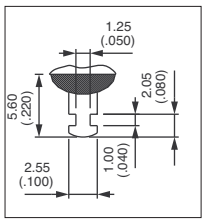

Bushing Ø 6,35 (1/4) - Alternate action - tactile feedback

Gold plated contacts
9631CDB ON - OFF

Silver contacts
9631AB ON - OFF

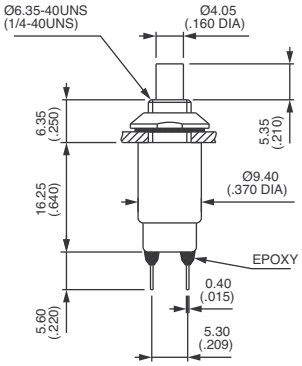

Standard hardware : 1 conic nut and 1 lockwasher

Bushing Ø 11,9 (15/32) - front or rear mounting - NO

9633MCDB Normally open

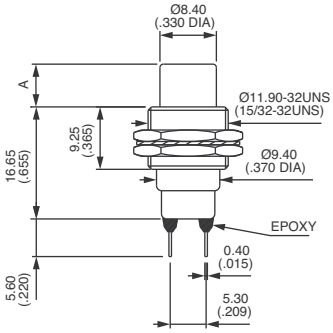

MODEL	A
9633M	6.35 (.250)

Standard hardware : 2 hex nuts 14 mm (.551) across flats and 1 lockwasher

10400 series

Professional pushbutton switches - threaded bushing Ø 10 (.393)

Distinctive features and specifications

❑ **CECC approved**

B2

ELECTRICAL SPECIFICATIONS

- Max. current/voltage rating with resistive load : 3A 24VDC
- Minimum load : 100µA 10mV
- Initial contact resistance : 10 mΩ max.
- Insulation resistance : 1.000 MΩ min. at 500VDC
- Dielectric strength :
  1.000 Veff. 50 Hz min. between terminals of the same pole
  2.000 Veff. 50 Hz min. between terminals and frame
  2.000 Veff. 50 Hz min. between terminals of adjacent poles
- Electrical life : 50.000 cycles

MATERIALS

- Case : diallylphthalate (DAP)
- Actuator : brass, chrome plated
- Bushing : brass, nickel plated
- Housing : brass, nickel plated
- Contacts :
  - silver
  - gold plated silver
- Terminal seal : epoxy

APPROVAL

CECC 96401-001

Availability : consult factory for details of approved models.

Marking : to order switches marked CECC, add "CECC" to model number.

GENERAL SPECIFICATIONS

- Torque : 1,50 Nm (1.106 Ft.lb) max. applied to nut
- Operating temperature : -40°C to +85°C
- Max. panel thickness : 3,5 mm (.138)

ABOUT THIS SERIES
Complete part numbers are shown on the following page.

Dimensions : first dimensions are in mm while inches are shown as bracketed numbers.

Sealing boots are available to protect the switches against dust and water. They are presented in section H.

Mounting accessories : standard hardware supplied with all models : 1 knurled nut, 1 hex nut, 1 locking ring and 1 lockwasher. They are presented in section I.

Packaging unit : 25 pieces.

The company reserves the right to change specifications without notice.

10400 series

Professional pushbutton switches - threaded bushing Ø 10 (.393)

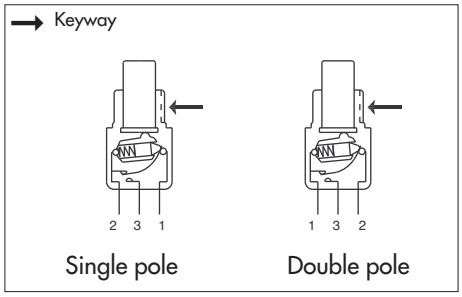

- Solder lug terminals
- 1 and 2 pole configurations
- Available with matt black finish : consult factory for model number

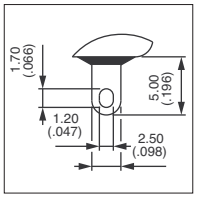

MODEL STRUCTURE

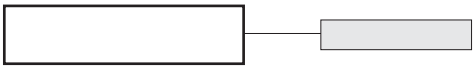

B2

Single pole

	A		B
	1-2		1-3
Silver contacts **104350003**	ON	-	MOM
Gold plated silver contacts **104350108**	ON	-	MOM

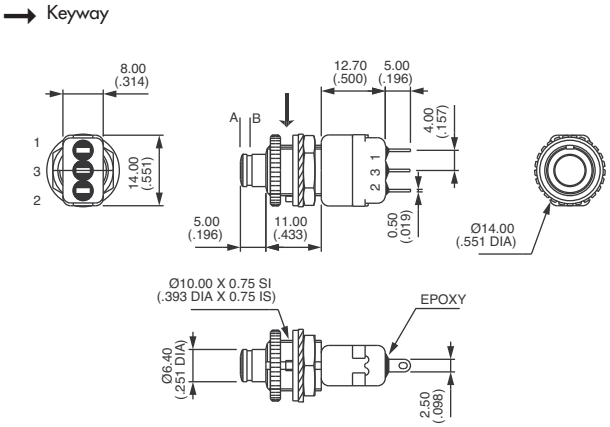

Double pole

	A		B
	2-1		2-3
	5-4		5-6
Silver contacts **104450003**	ON	-	MOM
Gold plated silver contacts **104450108**	ON	-	MOM

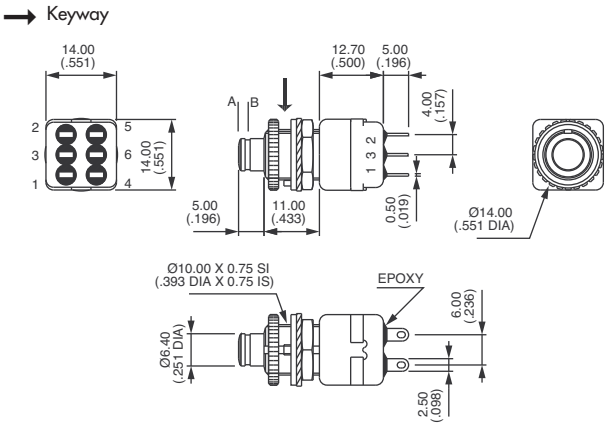

CAP

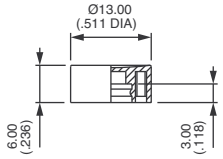

U2600

Cap colours

Replace last "0" by number

1	blue	**5**	yellow
1/4	dark blue	**6**	red
2	black	**7**	ivory
3	green	**7/1**	white
4	grey	**9**	orange

PANEL CUT-OUT

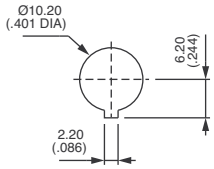

13000 series

Professional quick-break momentary pushbutton switches

Distinctive features and specifications

- ❑ **PC and panel mount models**
- ❑ **Bushing Ø 6,35 (1/4) and 11,9 (15/32)**
- ❑ **UL and CECC approved**

B2

ELECTRICAL SPECIFICATIONS

- Max. current/voltage rating with resistive load :
  - silver contacts (A-AD2) : 4A 30VDC
  - gold plated contacts (CD) : 100mA 30V
- Minimum load (AD2-CD contacts) : 10mA 50mV, 10µA 5V min.
- Initial contact resistance : 10 mΩ max.
- Insulation resistance : 1.000 MΩ min. at 500VDC
- Dielectric strength :
  1.000 Vrms 50 Hz min. between terminals
  2.000 Vrms 50 Hz min. between poles and between terminals and frame
- Contact bounce : 2 ms max.
- Electrical life :

Contacts	Max. current/voltage rating	Number of cycles
A	4A 30VDC	50.000
AD2	4A 30VDC (gold plating : 100mA 30VDC max.)	20.000
CD	100mA 30VDC	50.000
	Low level or mechanical life	150.000

MATERIALS

- Case : diallylphthalate (DAP)
- Actuator : brass, nickel plated
- Bushing : brass, nickel plated
- Housing : brass, nickel plated
- Contacts : **A** : silver
  AD2 : silver, gold plated
  (2 micron gold)
  CD : brass, gold plated
- Terminal seal : epoxy

Note : AD2 contacts can be used for high level applications.In this case, the gold layer is considered only as a protection against oxidation during storage.

GENERAL SPECIFICATIONS

- Torque : 1,25 Nm (.922 Ft.lb) max. applied to nut
- Standard panel thickness : 2 mm (.078) max.
- Total travel : 2 mm (.078)
- Operating temperature : -40°C to +85°C

The company reserves the right to change specifications without notice.

RELIABILITY - RUN-IN TEST

Upon request, each individual switch can be submitted to a low level run-in test of 50 or 250 cycles to ensure suitability for special applications requiring a very high level of reliability (military, space,etc.).

AGENCY APPROVALS

2A 125VAC/250VAC CECC 96401-001

Designed to **MIL** specifications

Availability :
UL : all models with silver or gold plated silver contacts
CECC : consult factory for details of approved models.

Marking : to order switches marked UL or CECC, complete appropriate box of ordering format.

Dimensions : first dimensions are in mm while inches are shown as bracketed numbers.

Sealing boots are available to protect the switches against dust and water. They are presented in section H.

Mounting accessories : standard hardware supplied with all models : 2 hex nuts 8 mm (.314) across flats, 1 locking ring and 1 lockwasher.
Standard and special hardware available are presented in section I.

Packaging unit : 50 pieces.

13000 series

Professional quick-break momentary pushbutton switches

Overview

MODEL STRUCTURE

13				

SERIES

Terminals and bushing

2	Straight PC terminals, bushing Ø 6,35 (1/4)
4	Solder lugs, bushing Ø 6,35 (1/4) or 11,9 (15/32) Right angle terminals, bushing Ø 6,35 (1/4)

No of poles

3	Single pole
4	Double pole

Electrical function

5	ON	-	MOM

Terminals

Blank	Solder lugs or straight PC depending on model
W	Right angle, horizontal mounting

B2

OPTIONS

Contact materials

A	Silver
AD2	Silver, gold plated (2 micron gold)
CD	Brass, gold plated

Finish

Blank	Bright chrome finish
G	Black finish on bushing, plunger and hardware

Special options

Blank	No special requirement
X640	Reinforced sealing by three O-rings
X768	Bushing Ø 11,9 (15/32) + front panel sealing (double pole only)

Caps

U900	Ø 5 (.196)
U1140	Ø 8 (.314)
U1720	Ø 9,4 (.370)
U480	Ø 10 (.393) std
U630	Ø 15 (.590)
U2430	Square, height 4 (.157)
U2020	Square, height 6 (.236)

For models with Ø 4 (.157) plunger only.

Plungers

Blank	Standard for Ø 6,35 (1/4) bushing
-4	4 mm (.157) long, for Ø 11,9 (15/32) bushing (X768)
-9	9 mm (.354) long, for Ø 11,9 (15/32) bushing (X768)

Sealing

Blank	Epoxy sealed terminals standard
K	Front panel sealing by one O-ring and sealing washer

Reinforced sealing, see X640 under "Special options".

Approvals

UL
CECC

Availability : Consult factory for details of approved models.

NOTICE : please note that not all combinations of above numbers are available.
Refer to the following pages for further information.

ABOUT THIS SERIES

On the following pages, you will find successively :
- model structure of switches
- options in the same order as in above chart

MODEL STRUCTURE

13000 series

Professional quick-break momentary pushbutton switches

Solder lug terminals : 13400 - Straight PC terminals : 13200

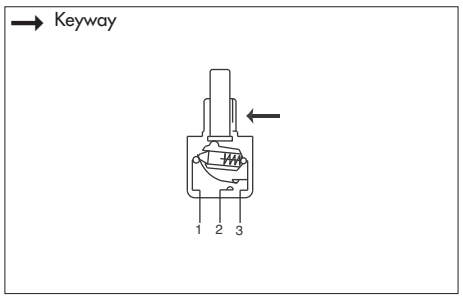

- Threaded bushing **Ø 6,35 mm (1/4)**
- Epoxy sealed terminals standard

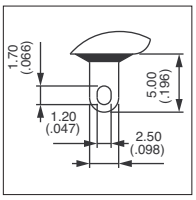

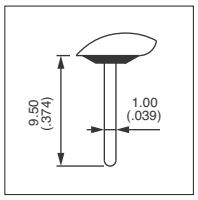

MODEL STRUCTURE

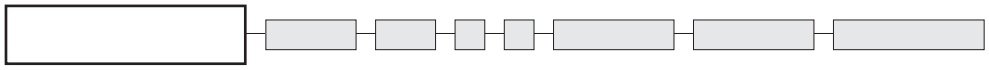

B2

Solder lug terminals : 13400

	1-3	1-2
Single pole **13435**	ON	MOM
Double pole **13445**	ON	MOM

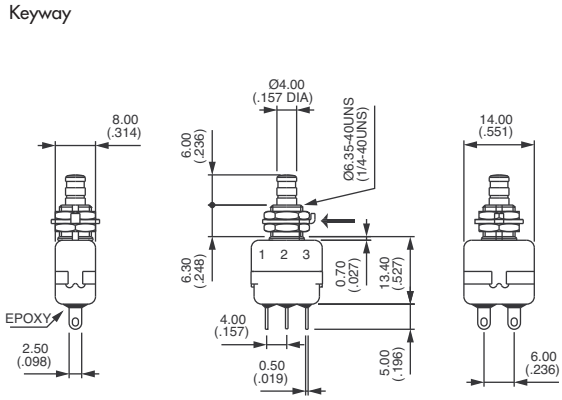

Straight PC terminals : 13200

	1-3	1-2
Single pole **13235**	ON	MOM
Double pole **13245**	ON	MOM

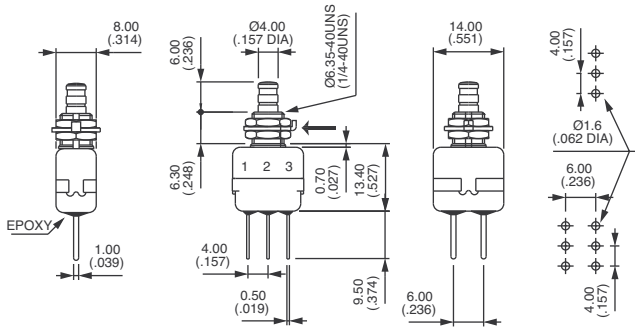

PANEL CUT-OUT

13400 - 13200

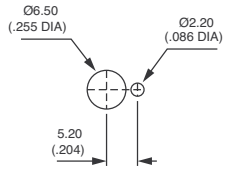

Standard

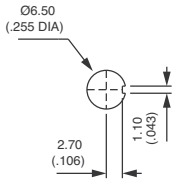

With **K** sealing option

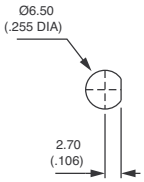

With **X640** sealing option

13000 series

Professional quick-break momentary pushbutton switches

Right angle terminals : 13400W

OPTIONS

Right angle terminals - single pole

13435W

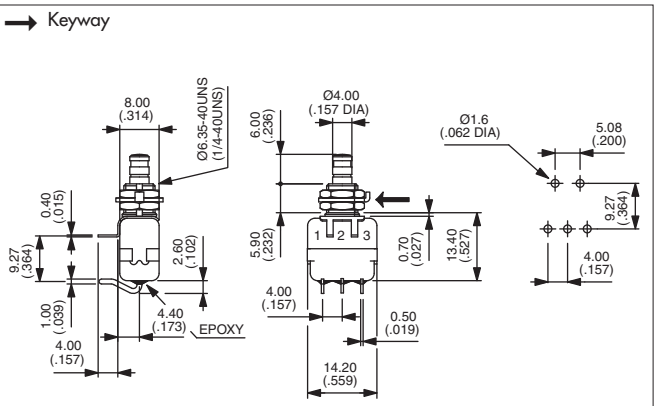

B2

Panel cut-out, see previous page.

CONTACT MATERIALS

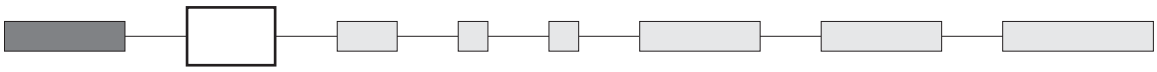

A	Silver
AD2	Silver, gold plated (2 micron gold)
CD	Brass, gold plated

PLUNGER

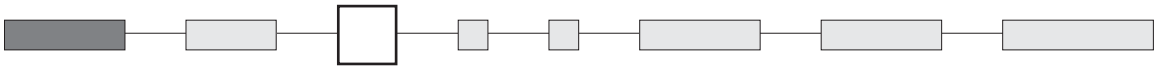

Dash compulsory before plunger code.

Blank	Standard plunger for Ø 6,35 (1/4) bushing
-4	4 mm (.157) long plunger for Ø 11,9 (15/32) bushing (X768 option)
-9	9 mm (.354) long plunger for Ø 11,9 (15/32) bushing (X768 option)

FINISH

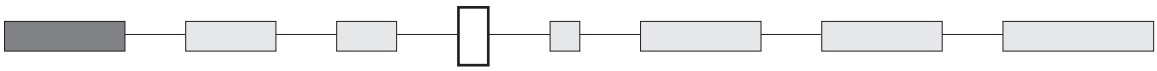

Blank Bright chrome finish

G Black finish on bushing, actuator and hardware

SEALING

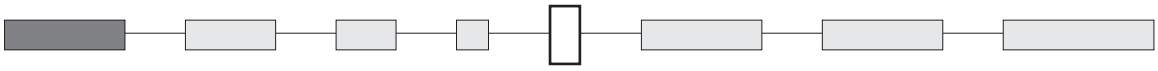

K Front panel sealing by one O-ring and sealing washer. Protects the switch against water and dust.
Panel seal withstands 1 bar pressure and remains sealed even when switch is operated.

Reinforced sealing : see X640 under "Special options".

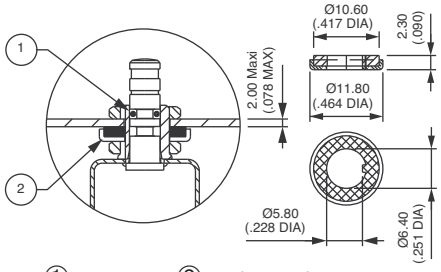

① O-ring ② Sealing washer

SPECIAL OPTIONS

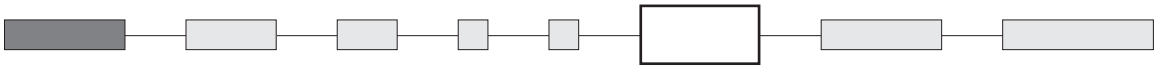

X640 Front panel sealing by three O-rings. Flatted bush for precise orientation.
Protects the switch against water and dust.
Panel seal withstands 1 bar pressure and remains sealed even when switch is operated.

⚠ Available on models with Ø 6,35 (1/4) bushing only.

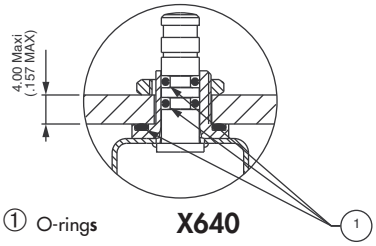

① O-rings **X640**

X935 C-ring on plunger for positive stop

13000 series

Professional quick-break momentary pushbutton switches

OPTIONS

X768 **Sealed switch with Ø 11,9 (15/32) flatted bushing**. Chrome plated actuator. Solder lug terminals, double pole. Contact and finish options available.

Security cap for this model : see section I.

	1-3	1-2
With short plunger **13445 -4 X768**	ON	MOM
With long plunger **13445 -9 X768**	ON	MOM

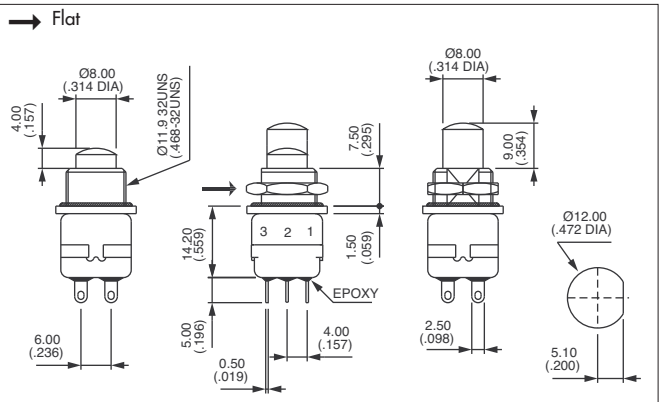

AGENCY APPROVALS

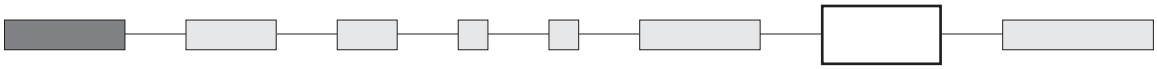

UL

CECC CECC 96401-001

Availability :
UL : all models with silver or gold plated silver contacts
CECC : consult factory for details of approved models.

Marking : to order switches marked UL or CECC, please complete above box with desired approval.
Blank : no agency approval required.

CAPS

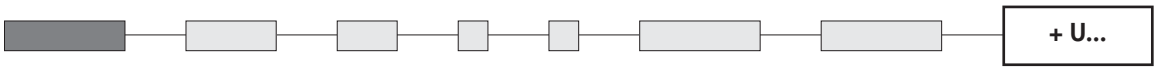

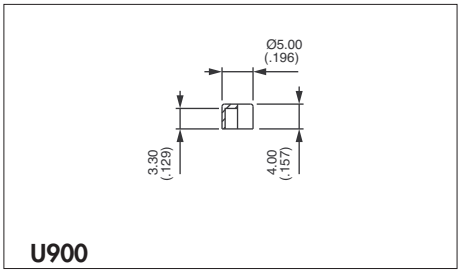

U900

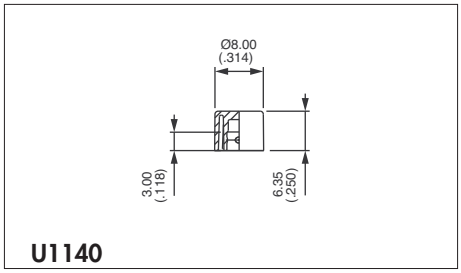

U1140

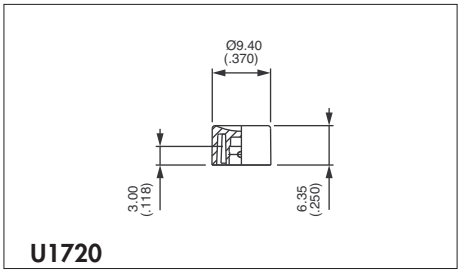

U1720

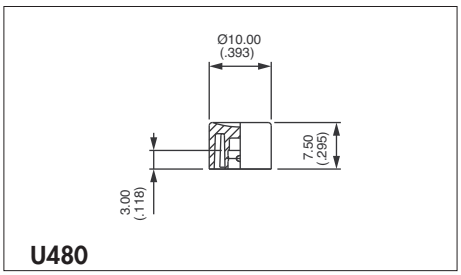

U480
Standard

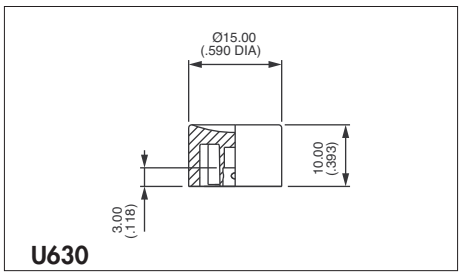

U630

For models with Ø 6,35 (1/4) bushing only.

Cap colours	
Replace last "0" by number	
1	blue
1/4	dark blue
2	black
3	green
4	grey
5	yellow
6	red
7	ivory
7/1	white
9	orange

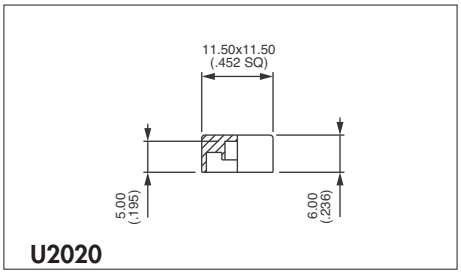

U2020
Square

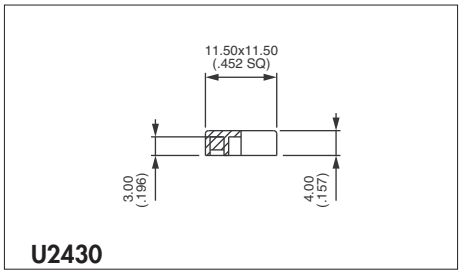

U2430
Square

DRESS NUTS

Chrome plated

For models with Ø 6,35 (1/4) bushing only.

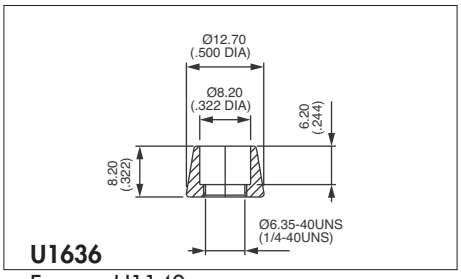

U1636
For cap U1140

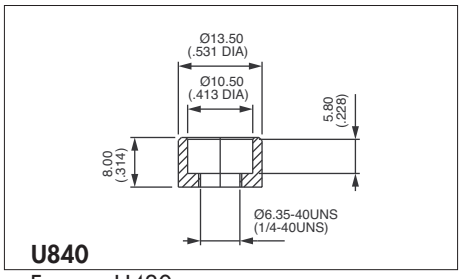

U840
For cap U480

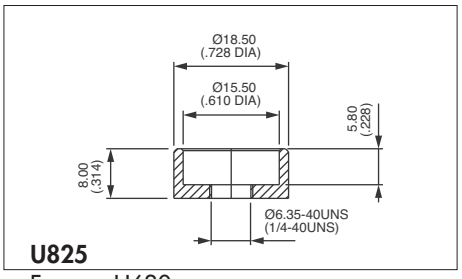

U825
For cap U630

Dress nuts are to be ordered separately.

13000X778 series

High performance pushbutton switches - threaded bushing Ø 11,9 (15/32) - momentary

Distinctive features

B2

- **3-pole configurations now available !**

- **Agency approvals**

  CECC 96401-001 (double pole only)

  This range of professional switches is suitable for use in military and other high specification environments.

- **Contacts**

  Highly reliable contacts suitable for low level applications or power applications

- **Double shell case**

  For high mechanical strength and high electrical insulation.

- **Compact size**

  The small rear end of the switch allows space savings behind the panel.

- **Finish**

  Black finish on body, bushing, plunger and hardware.

- **Full sealing**

  Panel sealed to IP 67, these switches are frontal sealed by three O-rings and have full rear end sealing.

The company reserves the right to change specifications without notice.

ELECTRICAL SPECIFICATIONS

- Max. current/voltage rating with resistive load : 4A 28VDC
- Minimum load : 10mA 50mV, 10µA 5VDC
  When used above 300mA 28VDC, the gold plating is removed on contact areas and is considered only as a protection against oxidation during storage.
- Initial contact resistance : 10 mΩ max.
- Insulation resistance : 1.000 MΩ min. at 500VDC
- Dielectric strength :
  1.000 Vrms 50 Hz min. between terminals
  2.000 Vrms 50 Hz min. between poles
  2.000 Vrms 50 Hz min. between terminals and frame
- Contact bounce : 2 ms max.
- Electrical life :
  - At 4A 28VDC : 10.000 cycles
  - At low level (50mV 10mA) : 150.000 cycles

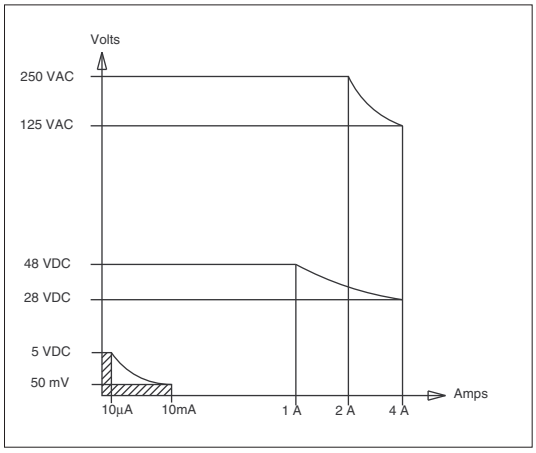

MATERIALS

- Case : diallylphthalate (DAP) with PBT external shell (epoxy sealed)
- Actuator : brass, black chrome plated
- Bushing : brass, black chrome plated
- Contacts : silver inlay - gold plated over nickel barrier

SEALING

- Front panel sealing by three O-rings
- Panel seal withstands 1 bar pressure and remains sealed even when the switch is operated.
- Epoxy sealed terminals
- Splash-proof case

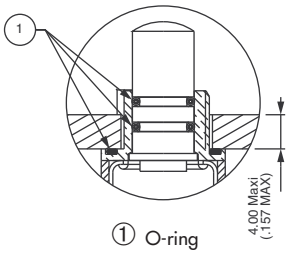

GENERAL SPECIFICATIONS

- Total travel : 2 mm (.078)
- Torque : 1,50 Nm (1.10 Ft.lb) max. applied to nut
- Panel thickness : 5 mm (.196) max.
- Shock test : 50g - 11ms (IEC 68-2-27)
- Vibrations : 10-500 Hz - 10g (IEC68-2-6)
- Operating temperature : -40°C to +85°C
- Humidity test : 56 days, 93 % R.H., 40°C (IEC 68-2-3)
- Salt spray test : 96 hours (IEC 68-2-11)

APPROVALS

Many double pole models have full CECC approval. Consult factory for details of approved models. To order switches marked CECC, complete appropriate box of ordering format.

13000X778 series

High performance pushbutton switches - threaded bushing Ø 11,9 (15/32) - momentary

Overview

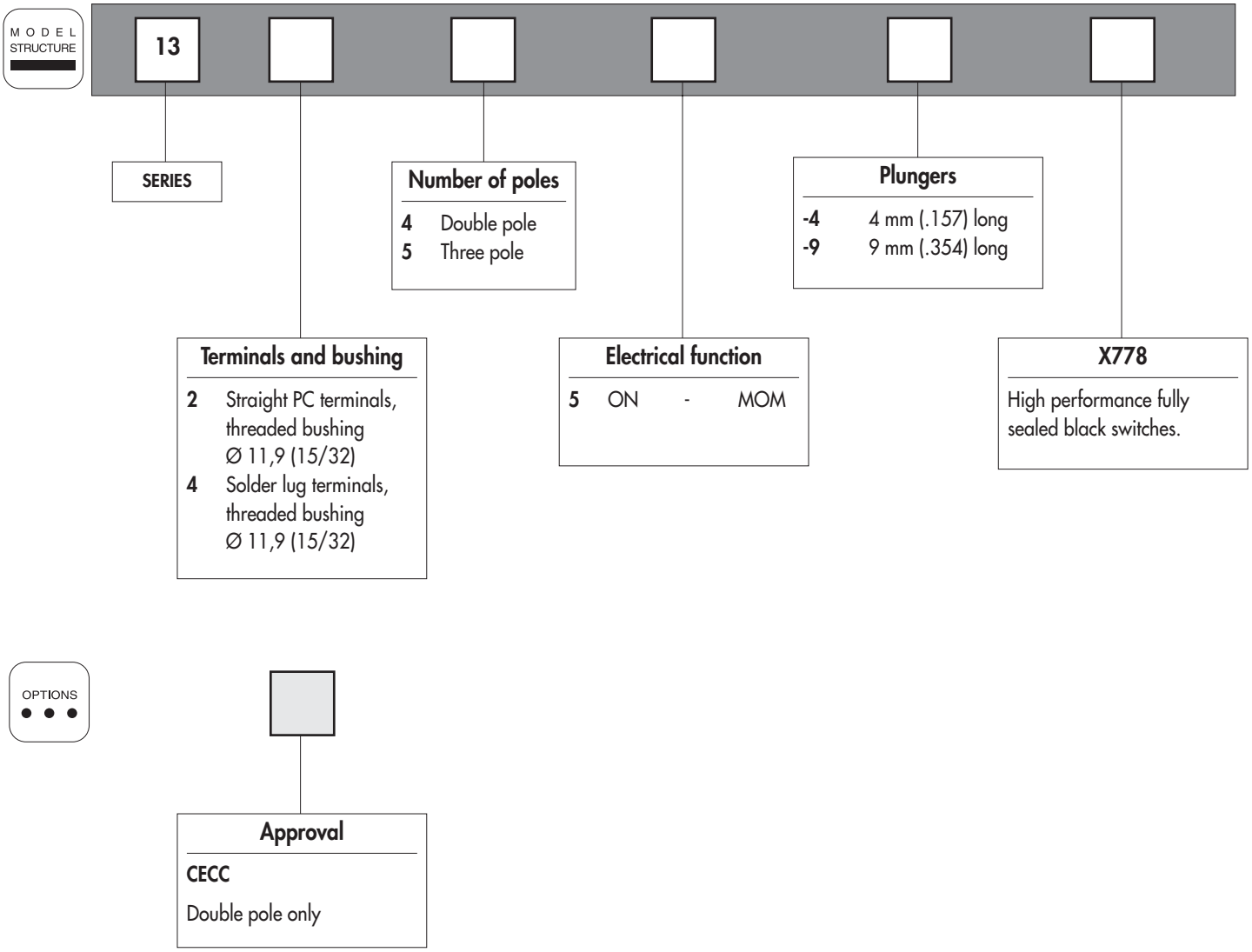

ABOUT THIS SERIES
On the following pages, you will find successively :
- model structure of switches
- options in the same order as in above chart

Dimensions : first dimensions are in mm while inches are shown as bracketed numbers.

Sealing boots can be used to further protect the switches against dust and water. They are presented in section H.

Mounting accessories : standard hardware supplied with all models : 1 hex nut 14 (.551) across flats, part number U41. This nut is presented after model structure of switches.

Security cap available to prevent inadvertent plunger operation. See section I.

Packaging unit : 25 pieces

13000X778 series

High performance pushbutton switches - threaded bushing Ø 11,9 (15/32) - momentary

Fully sealed - black

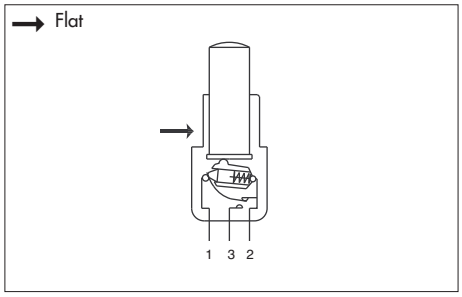

- **Quick-break momentary pushbutton switches**

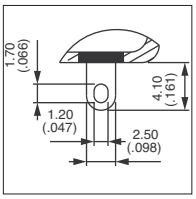

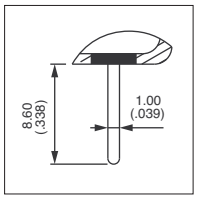

MODEL STRUCTURE

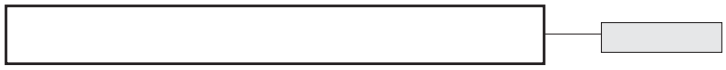

B2

Solder lug terminals - double pole - 4 mm (.157) plunger

13445-4X778

ON

MOM

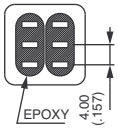

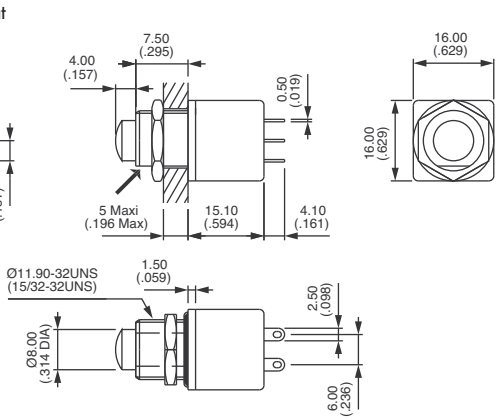

Solder lug terminals - double pole - 9 mm (.354) plunger

13445-9X778

ON

MOM

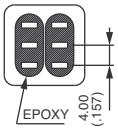

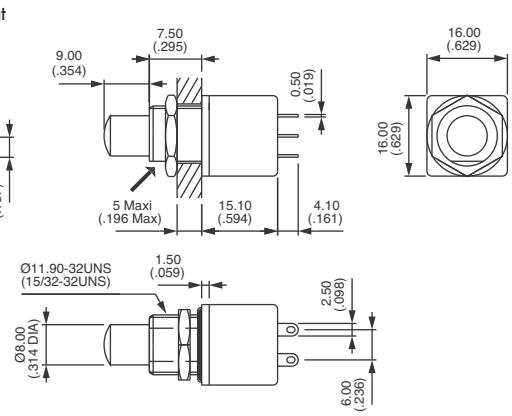

Straight PC terminals - double pole - 4 mm (.157) plunger

13245-4X778

ON

MOM

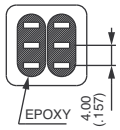

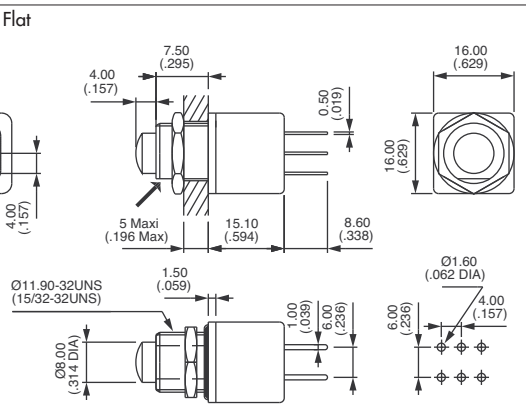

13000X778 series

High performance pushbutton switches - threaded bushing Ø 11,9 (15/32) - momentary

Fully sealed - black

Straight PC terminals - double pole - 9 mm (.354) plunger → Flat

13245-9X778

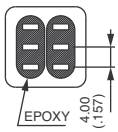

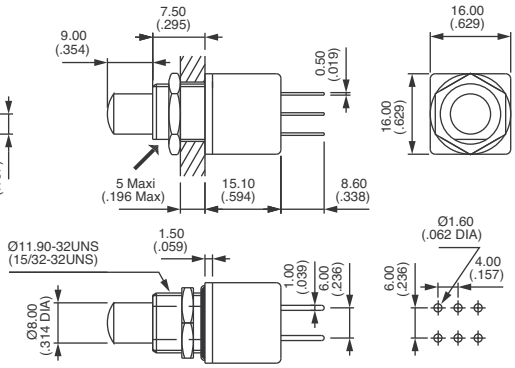

Solder lug terminals - three pole - 4 mm (.157) plunger → Flat

13455-4X778

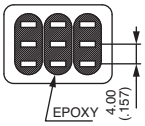

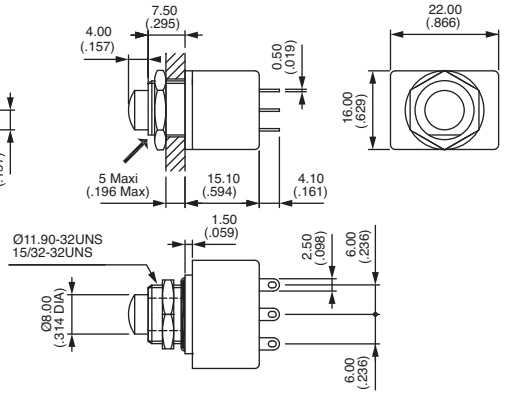

Solder lug terminals - three pole - 9 mm (.354) plunger → Flat

13455-9X778

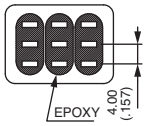

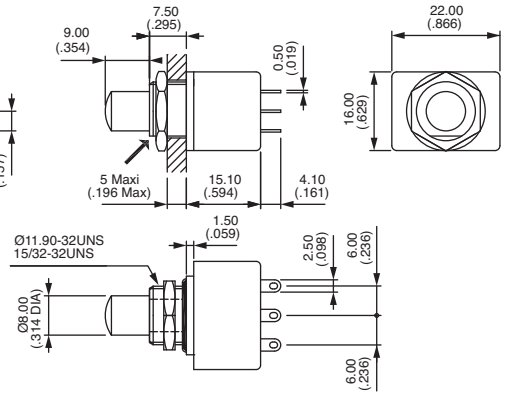

Straight PC terminals - three pole - 4 mm (.157) plunger → Flat

13255-4X778

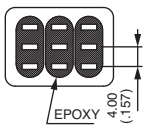

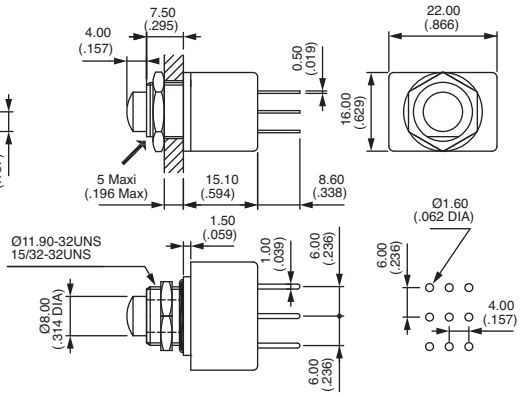

13000X778 series

High performance pushbutton switches - threaded bushing Ø 11,9 (15/32)

Fully sealed - black

Straight PC terminals - three pole - 9 mm (.354) plunger

13255-9X778

ON

MOM

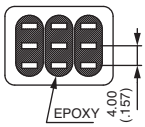

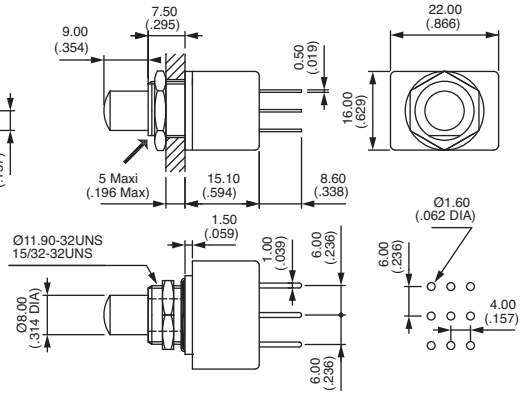

B2

PANEL CUT-OUT

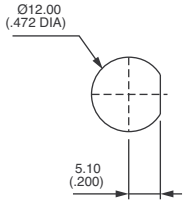

STANDARD HARDWARE

Hex nut

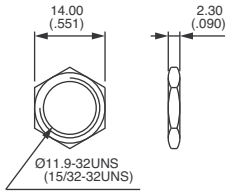

U41 (black)

POSITIONS AND CONNECTIONS

FUNCTION	BUTTON POSITION AND CONNECTIONS I	BUTTON POSITION AND CONNECTIONS II	TERMINAL IDENTIFICATION
	ON	MOM	→ Flat
DOUBLE POLE			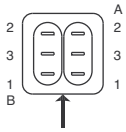
13245	A 1-2	A 1-3	
13445	B 1-2	B 1-3	
THREE POLE	A 1-2	A 1-3	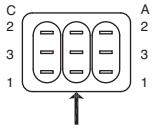
13255	B 1-2	B 1-3	
13455	C 1-2	C 1-3	

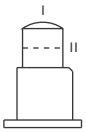

Pre-travel : 1 mm (.039)
Over-travel : 1 mm (.039)
Total travel : 2 mm (.078)

AGENCY APPROVAL

CECC CECC 96401-001 (double pole only)

Marking : to order switches marked CECC, please complete above box with "CECC".
Blank : no agency approval required.

13000X778 series

High performance pushbutton switches - threaded bushing Ø 11,9 (15/32) - alternate action

Distinctive features

B2

❑ Applications
These professional switches are suitable for use in military and other high specifications environments.

❑ Alternate action
Now available as a bistable switch to have a maintained electrical contact.

❑ Contacts
Highly reliable contacts suitable for low level applications or power applications.

❑ Double shell case
For high mechanical strength and high electrical insulation.

❑ Compact size
The small rear end of the switch allows space savings behind the panel.

❑ Finish
Black finish on body, bushing, plunger and hardware.

❑ Full sealing
Panel sealed to IP 67, these switches are frontal sealed by two O-rings and have full rear end sealing.

The company reserves the right to change specifications without notice.

ELECTRICAL SPECIFICATIONS

- Max. current/voltage rating with resistive load : 4A 28VDC
- Minimum load : 10mA 50mV, 10µA 5VDC
  When used above 300mA 28VDC, the gold plating is removed on contact areas and is considered only as a protection against oxidation during storage.
- Initial contact resistance : 10 mΩ max.
- Insulation resistance : 1.000 MΩ min. at 500VDC
- Dielectric strength :
  1.000 Vrms 50 Hz min. between terminals
  2.000 Vrms 50 Hz min. between poles
  2.000 Vrms 50 Hz min. between terminals and frame
- Contact bounce : 2 ms max.
- Electrical life :
  - At 4A 28VDC : 10.000 cycles
  - At low level (50mV 10mA) : 150.000 cycles

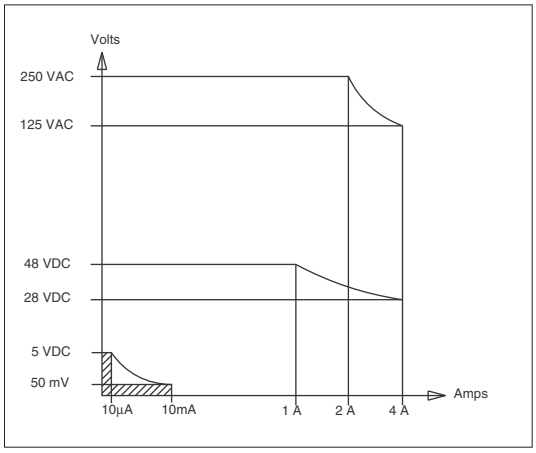

MATERIALS

- Case : diallylphthalate (DAP) with PBT external shell (epoxy sealed)
- Actuator : brass, black chrome plated
- Bushing : brass, black chrome plated
- Contacts : silver inlay - gold plated over nickel barrier

SEALING

- Front panel sealing by two O-rings
- Panel seal withstands 1 bar pressure and remains sealed even when the switch is operated.
- Epoxy sealed terminals
- Splash-proof case

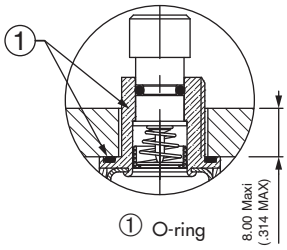

GENERAL SPECIFICATIONS

- Total travel : 2,5 mm (.098)
- Torque : 1,50 Nm (1.10 Ft.lb) max. applied to nut
- Panel thickness : 8 mm (.315) max.
- Shock test : 50g - 11ms (IEC 68-2-27)
- Vibrations : 10-500 Hz - 10g (IEC68-2-6)
- Operating temperature : -40°C to +85°C
- Humidity test : 56 days, 93 % R.H., 40°C (IEC 68-2-3)
- Salt spray test : 96 hours (IEC 68-2-11)

13000X778 series

High performance pushbutton switches - threaded bushing Ø 11,9 (15/32) - alternate action

Overview

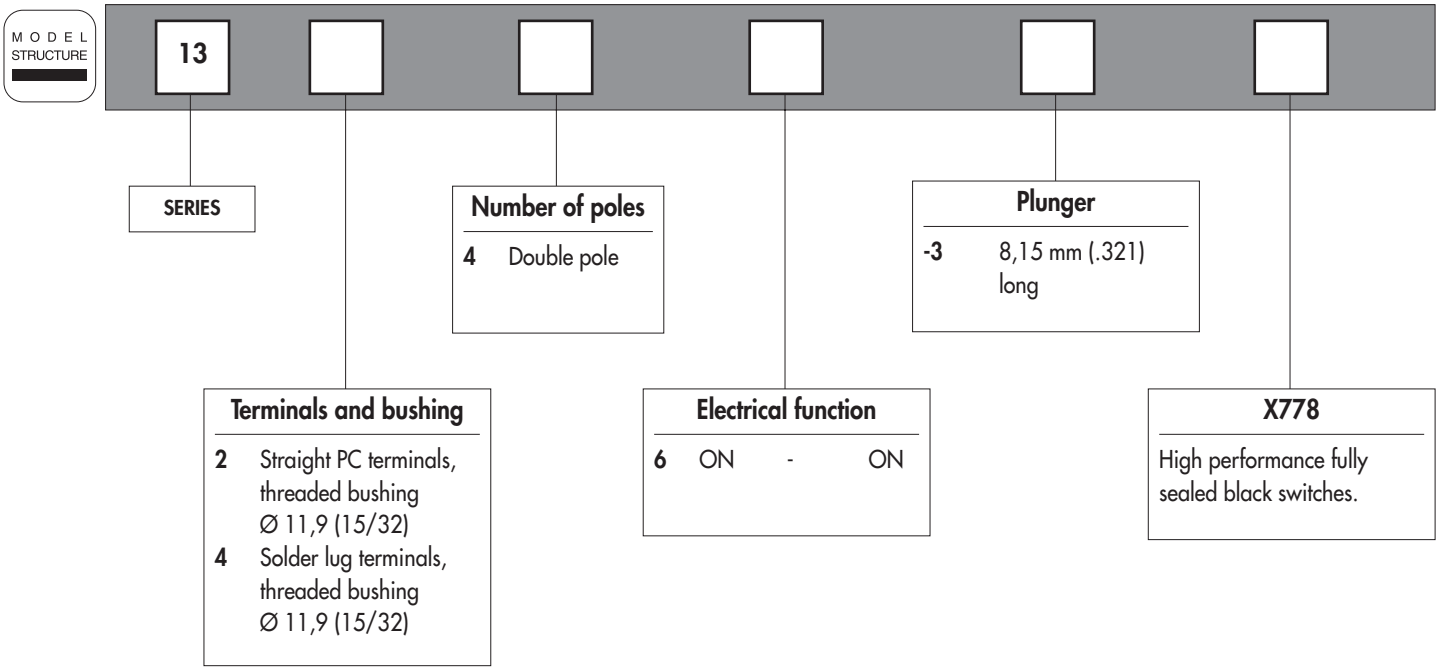

Dimensions : first dimensions are in mm while inches are shown as bracketed numbers.

Sealing boots can be used to further protect the switches against dust and water. They are presented in section H.

Mounting accessories : standard hardware supplied with all models : 1 hex nut 14 (.551) across flats, part number U41. This nut is presented after model structure of switches.

Packaging unit : 25 pieces

13000X778 series

High performance pushbutton switches - threaded bushing Ø 11,9 (15/32) - alternate action

Fully sealed - black

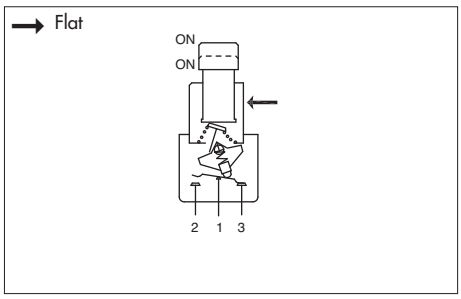

- Alternate action pushbutton switches
- Button returns in upper position after actuation.

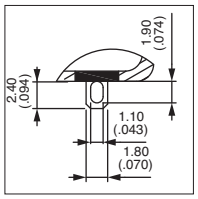

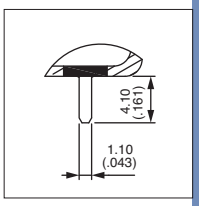

MODEL STRUCTURE

B2

Solder lug terminals - double pole

13446-3X778 ON ON

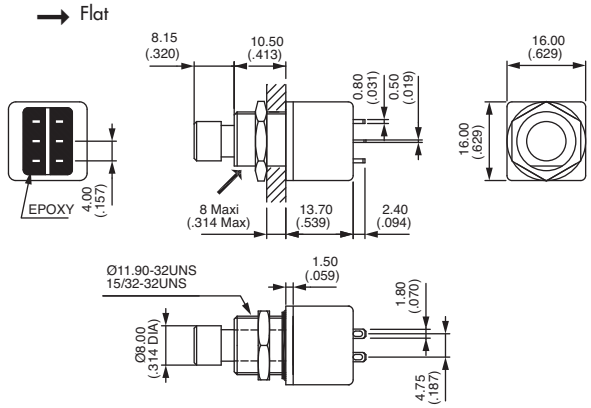

Straight PC terminals - double pole

13246-3X778 ON ON

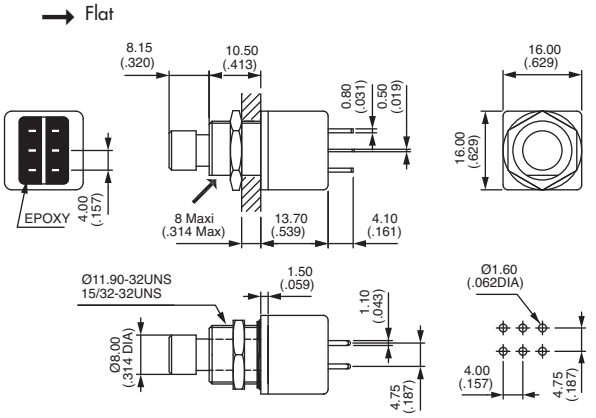

13000X778 series

High performance pushbutton switches - threaded bushing Ø 11,9 (15/32) - alternate action

Fully sealed - black

PANEL CUT-OUT

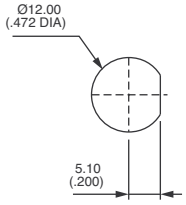

STANDARD HARDWARE

Hex nut

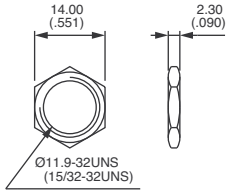

U41 (black)

B2

POSITIONS AND CONNECTIONS

FUNCTION	BUTTON POSITION AND CONNECTIONS I	BUTTON POSITION AND CONNECTIONS II	TERMINAL IDENTIFICATION	
13246 13446	ON A 1-2 B 1-2	ON A 1-3 B 1-3	→ Flat 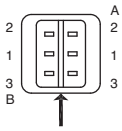	

18000 series

Snap-action momentary pushbutton switches

Distinctive features and specifications

- ❑ **Panel and PC mount models**
- ❑ **Snap-in panel mounting version**
- ❑ **Tactile feedback**

B2

ELECTRICAL SPECIFICATIONS

- Max. current/voltage rating with resistive load :
  - gold plated brass contacts : 100mA - 30VDC
  - gold plated silver contacts : 1A 30VDC
- Initial contact resistance : 50 mΩ max.
- Insulation resistance : 1.000 MΩ min.
- Dielectric strength : 1.000 Vrms 50 Hz min.
- Electrical life : 60.000 cycles at full load

Models for high currents : see 18635A and 18645A at the end of the series.

MATERIALS

- Case : PBT
- Actuator : polyamide, glass filled
- Bushing : brass, nickel plated
- Housing : stainless steel
- Bracket : tin plated steel
- Contacts
  AD : silver, gold plated
  CD : brass, gold plated
- Terminal seal : epoxy

GENERAL SPECIFICATIONS

- Total travel : 0,5 mm (.019)
- Torque : 1,25 Nm (.922 Ft.lb) max. applied to nut
- Operating temperature : -30°C to +65°C
- Soldering : 300°C, 3 sec. max.

The company reserves the right to change specifications without notice.

18000 series

Snap-action momentary pushbutton switches

Overview

MODEL STRUCTURE

18				

SERIES

Number of poles

3	Single pole
4	Double pole

Terminals

Blank	Solder lugs or straight PC depending on model
W	Right angle, horizontal mounting
WW	Right angle, vertical mounting
Y	Bracket mounting

Terminals and bushing

2	Straight PC terminals with Ø 6,35 (1/4) threaded bushing Straight PC terminals + bracket or right angle terminals with plain bushing
5	Solder lug terminals with Ø 6,35 (1/4) threaded bushing.
7	Solder lug terminals with Ø 6,35 (1/4) flatted bushing.
8	Solder lug terminals, snap-in mounting
9	Straight PC terminals with Ø 6,35 (1/4) flatted bushing.

Electrical function

5	ON	-	MOM

ABOUT THIS SERIES

On the following pages, you will find successively :
- model structure of switches
- options in the same order as in above chart

Dimensions : first dimensions are in mm while inches are shown as bracketed numbers.

NOTICE : please note that not all combinations of above numbers are available.
Refer to the following pages for further information.

Contact materials

AD Silver, gold plated
CD Brass, gold plated

Special options

X624 Shorter bushing and plunger
X662 Snap-in mounting and straight PC terminals

Other : specific bushings, etc... See following pages.

Bezels

For snap-in mounting models
U1200
U1210 for LED
For bracket mounting models
U3200

Plungers

Blank Ø 4 (.157), long
-6 Ø 3,1 (.122), length 5,85 mm (.230)
-3 Ø 4 (.157), short
-5 Ø 3,1 (.122), length 6,3 mm (.248)

Caps

For Ø 4 (.157) plungers (-3, -13)
U900 Ø 5 (.196)
U1140 Ø 8 (.314)
U1720 Ø 9,4 (.370)
U480 Ø 10 (.393) - standard
U630 Ø 15 (.590)
U2430 Square Height 4 (.157)
U2020 Square Height 6 (.236)

For Ø 3,1 (.122) plungers (-5, -6)
U2400 Ø 5 (.196)
U2510 Ø 8 (.314)
U2130 Ø 9,4 (.370)
U2900 Ø 10 (.393)
U3400 Ø 15 (.590)
U910 Square Height 4 (.157)
U2340 Square Height 6 (.236)

Sealing boots are available to protect the switches against dust and water. They are presented in section H.

Mounting accessories : standard hardware supplied with all models with Ø 6,35 (1/4) threaded bushing :
2 hex nuts 8 mm (.314) across flats, 1 locking ring and 1 lockwasher.
Standard and special hardware available are presented in section I.

Packaging unit : 25 pieces for W, WW double pole and 18800 models
50 pieces for other models.

18000 series

Snap-action momentary pushbutton switches

Threaded bushing Ø 6,35 (1/4) : 18500 - 18700 - 18200

MODEL STRUCTURE

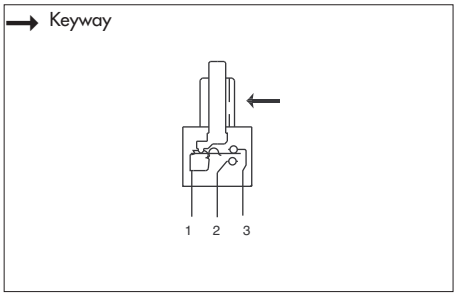

- Solder lug or straight PC terminals
- Epoxy sealed terminals standard

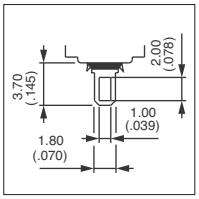

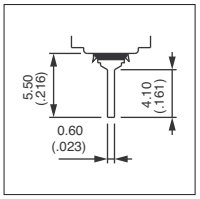

B2

MODEL STRUCTURE

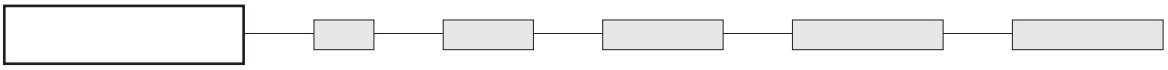

Shown with standard plunger

Solder lug terminals : 18500

	1-3	1-2
Single pole **18535**	ON	MOM
Double pole **18545**	ON	MOM

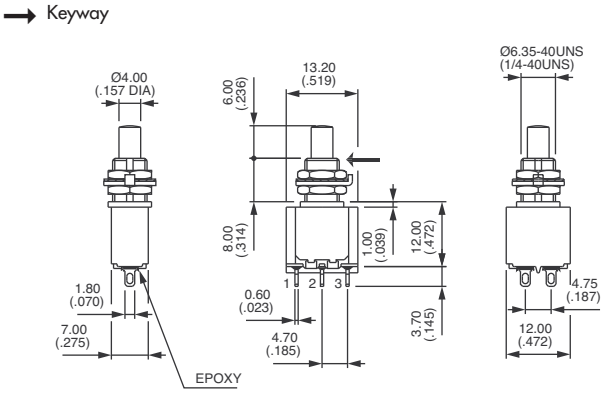

Flatted bushing - solder lug terminals : 18700

	1-3	1-2
Single pole **18735**	ON	MOM
Double pole **18745**	ON	MOM

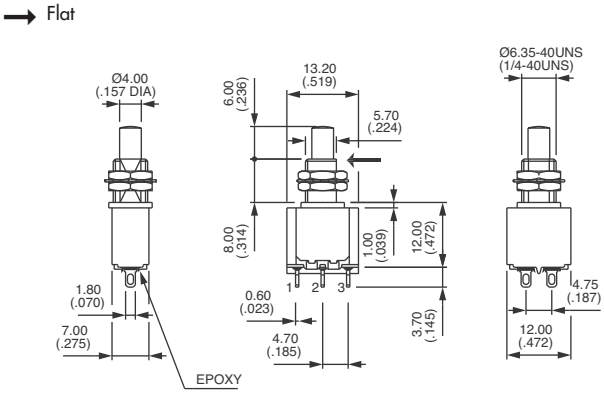

Straight PC terminals : 18200

	1-3	1-2
Single pole **18235**	ON	MOM
Double pole **18245**	ON	MOM

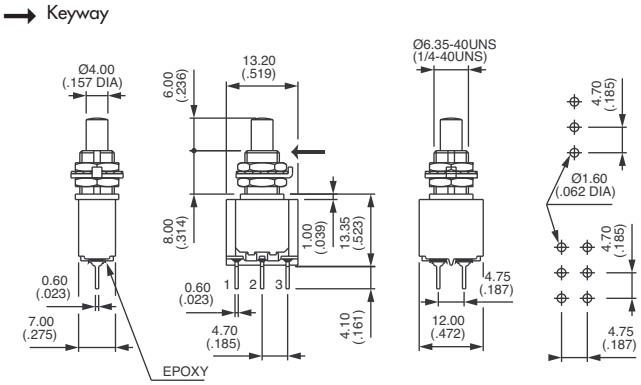

18000 series

Snap-action momentary pushbutton switches

Threaded bushing Ø 6,35 (1/4) : 18900 - Snap-in mounting : 18800

Flatted bushing - straight PC terminals : 18900

	1-3	1-2
Single pole **18935**	ON	MOM
Double pole **18945**	ON	MOM

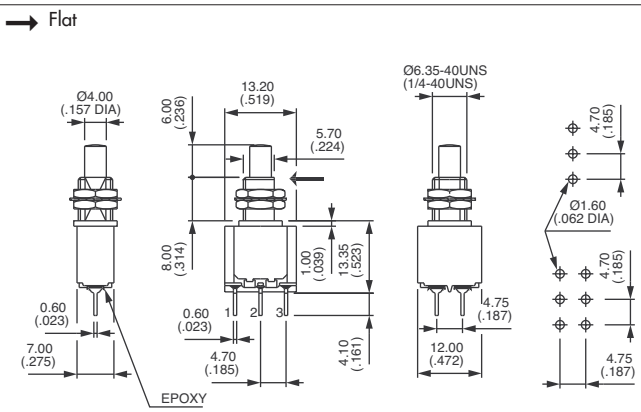

Snap-in mounting - solder lug terminals : 18800

Shown with cap U910 + U1200

	1-3	1-2
Single pole **18835**	ON	MOM
Double pole **18845**	ON	MOM

Available with straight PC terminals : see X662 under "Special options".

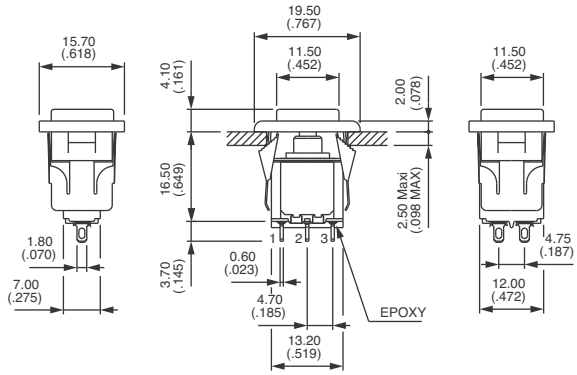

PANEL CUT-OUT

18500 - 18200

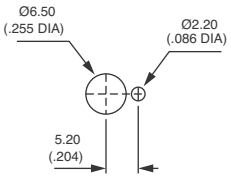

18700 - 18900

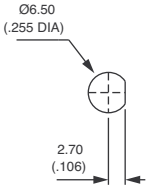

PANEL CUT-OUT

18800

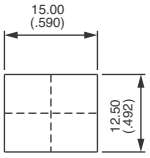

With bezel **U1200**

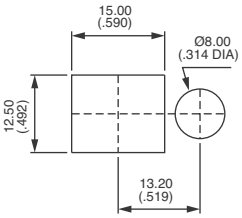

With bezel **U1210** for LED

18000 series

Snap-action momentary pushbutton switches

Plain bushing : 18200Y - 18200W - 18200WW

MODEL STRUCTURE

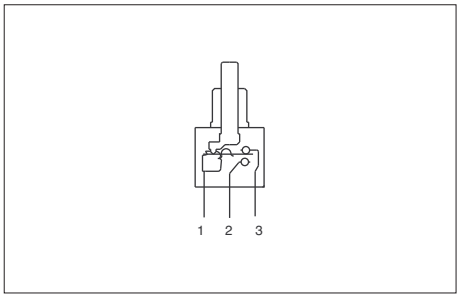

- Straight PC or right angle terminals
- Epoxy sealed terminals standard

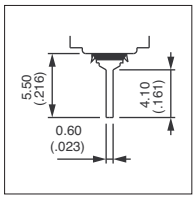

B2

MODEL STRUCTURE

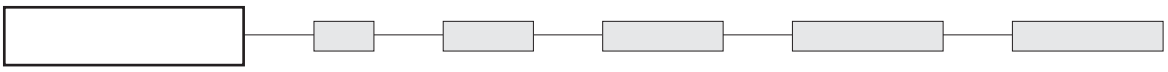

Shown with standard plunger (-3)

Straight PC terminals - bracket mounting - single pole 18230Y

18235Y

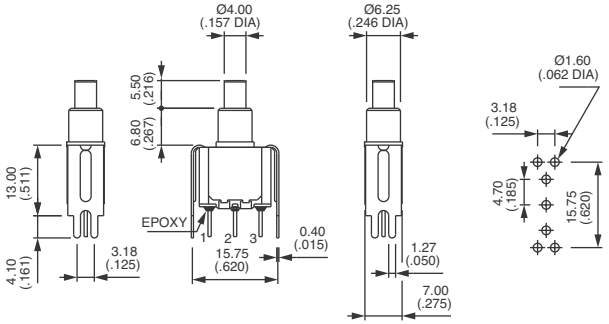

Straight PC terminals - bracket mounting - doube pole 18240Y

18245Y

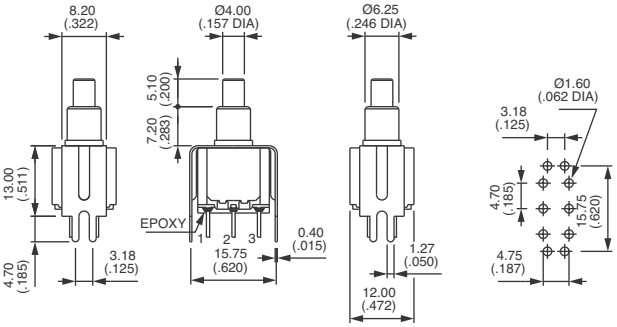

Right angle terminals - horizontal : 18200W

Single pole
18235W

Double pole
18245W

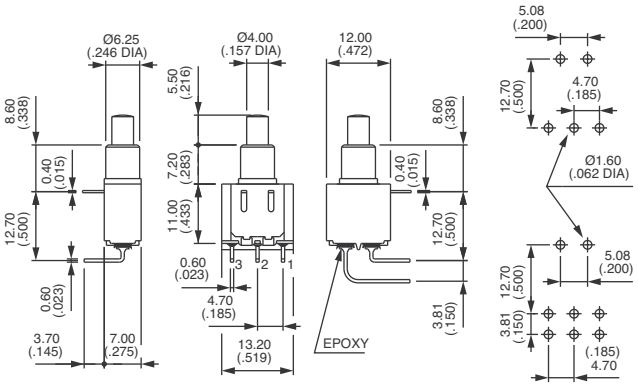

Right angle terminals - vertical : 18200WW

	1-3	1-2
Single pole **18235WW**	ON	MOM
Double pole **18245WW**	ON	MOM

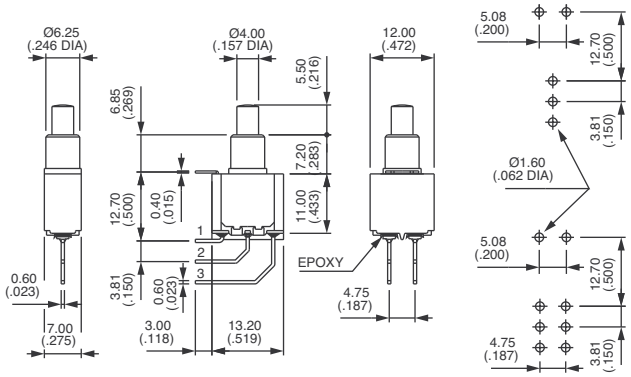

B2

CONTACT MATERIALS

AD Silver, gold plated
CD Brass, gold plated

PLUNGERS

Dash compulsory before plunger code.

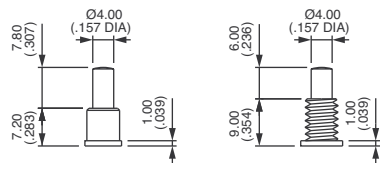

Blank

Ø 4 (.157) - long

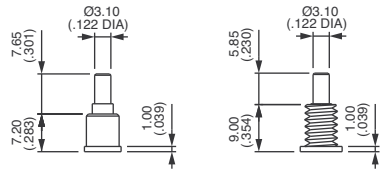

-6

Ø 3,1 (.122)

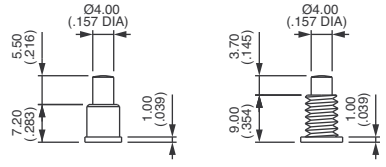

-3

Ø 4 (.157) - short

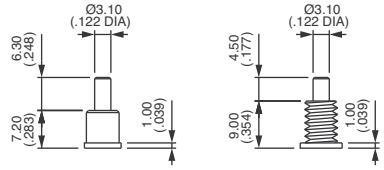

-5

Ø 3,1 (.122)

SPECIAL OPTIONS

X624 Straight PC terminals - bracket mounting - **with shorter bushing and plunger**

Single pole

18235Y -2X624

ON MOM

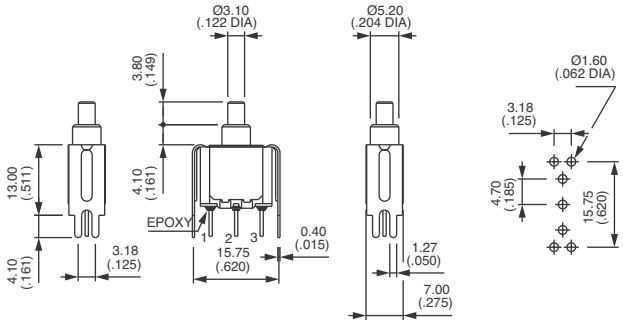

Double pole

18245Y -2X624

ON MOM

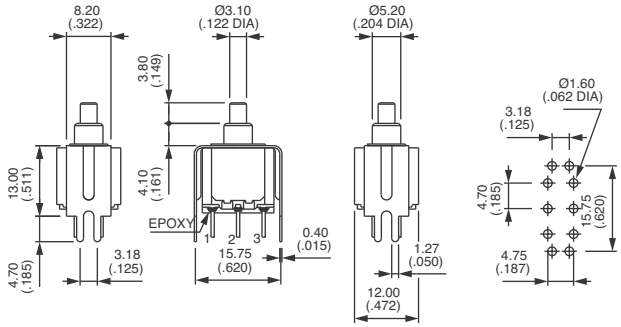

X662 **Snap-in mounting - straight PC terminals**

Single pole
18835 X662

ON MOM

Double pole
18845 X662

ON MOM

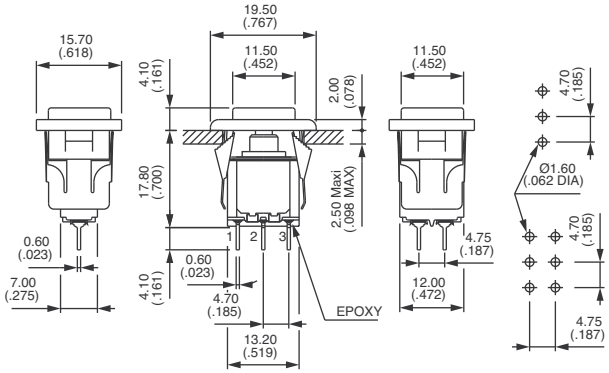

SPECIAL OPTIONS (continued)

X371 Plain bushing Ø 6,25 mm (.246) (instead of standard threaded bushing).

X372 Shorter threaded bushing Ø 6,35 (1/4). **Height 7 mm (.274).**

X386 Threaded bushing Ø 6,35 mm (1/4) to replace plain bushing on models W - WW and Y.

X438 Plain bushing Ø 6,25 mm (.246). **Height 7,2 mm (.283) - without shoulder.**

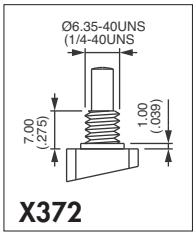

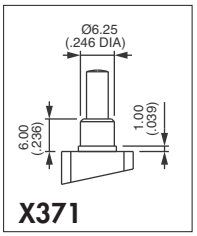

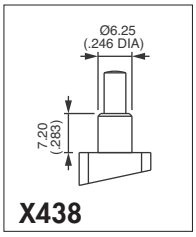

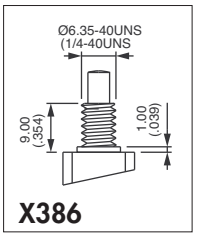

CAPS

Caps for Ø 4 (.157) plungers (-13, -3)

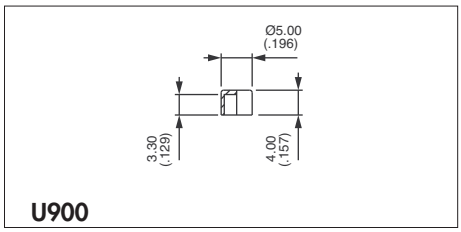

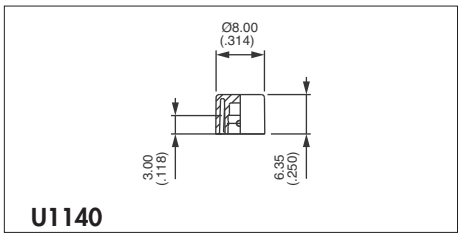

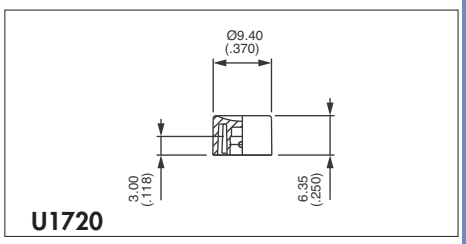

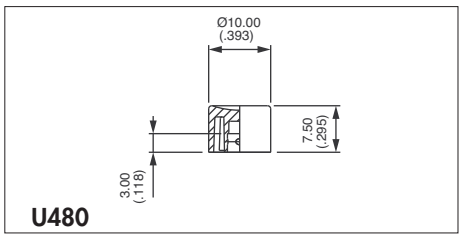

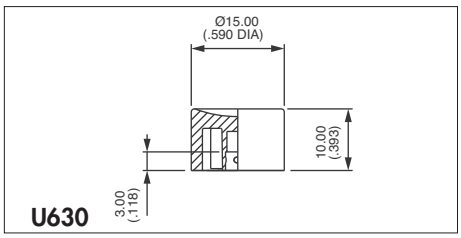

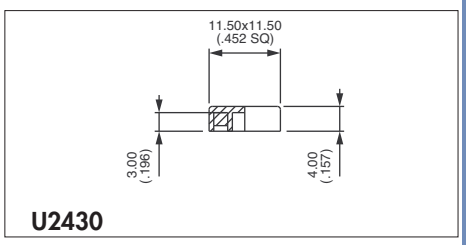

Square

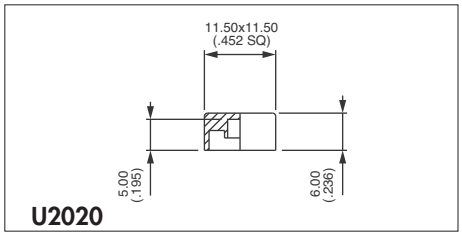

Square

Cap colours			
Replace last "0" by number			
1	blue	**5**	yellow
1/4	dark blue	**6**	red
2	black	**7**	ivory
3	green	**7/1**	white
4	grey	**9**	orange

CAPS (continued)

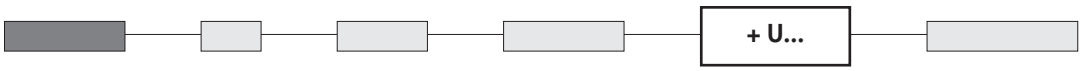

Caps for Ø 3,1 (.122) plungers (-5, -6)

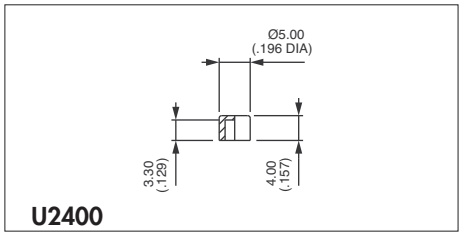

U2400

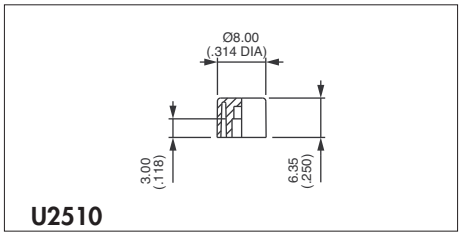

U2510

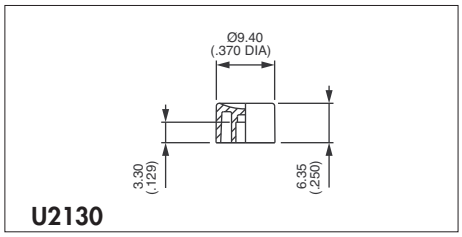

U2130

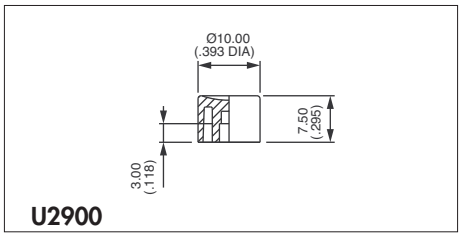

U2900

Cap colours	
Replace "0" by number	
1	blue
1/4	dark blue
2	black
3	green
4	grey
5	yellow
6	red
7	ivory
7/1	white
9	orange

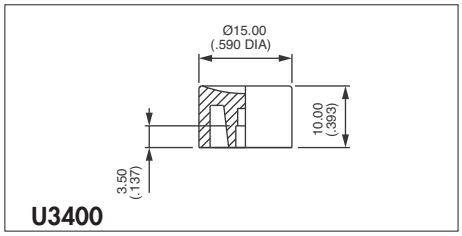

U3400

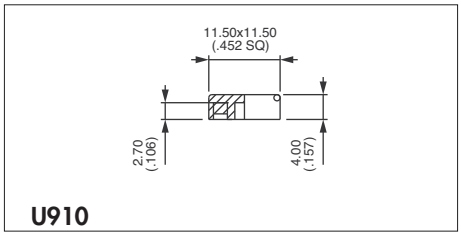

U910
Square

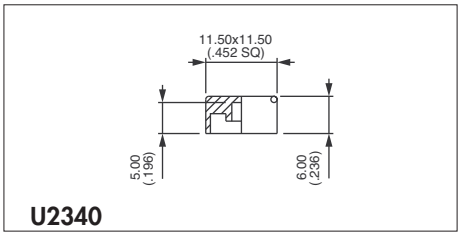

U2340
Square

Caps for 18800 and 18800X662 models

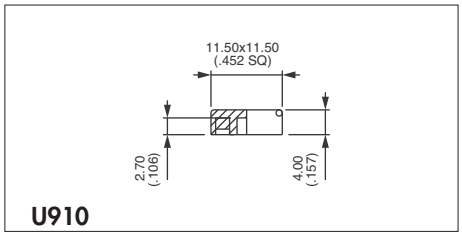

U910
Square

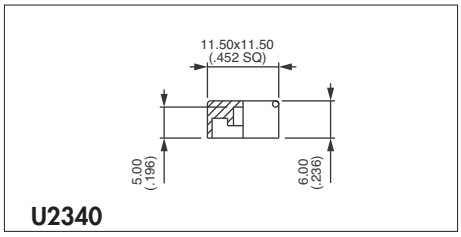

U2340
Square

DRESS NUTS

For models with threaded bushing (18500 - 18700 - 18200 - 18900)

Chrome plated - Order separately.

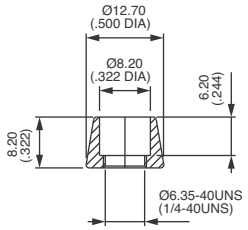

U1636

For caps U1140 and U2510

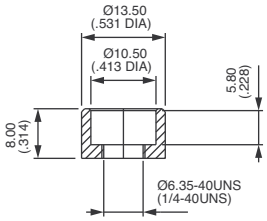

U840

For cap U480 and U2900

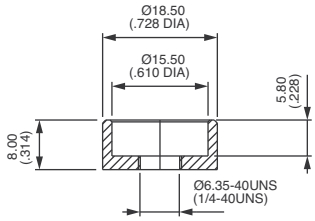

U825

For caps U630 and U3400

BEZELS

For snap-in models (18800 - 18800X662)

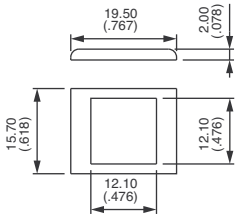

U1200

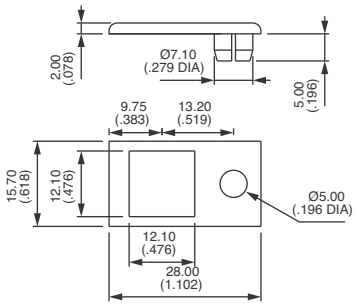

U1210

For LED Ø 5 - not supplied

Bezel colours	
Replace last "0" by number	
1	blue
1/4	dark blue
2	black
3	green
4	grey
5	yellow
6	red
7	ivory
7/1	white
9	orange

For bracket mounting models (18200Y & 18200YX624)

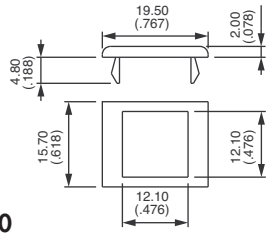

U3200

STANDARD PANEL MOUNTING

Panel thickness with bezel : 1 mm (.039) to 2,5 mm (.098)

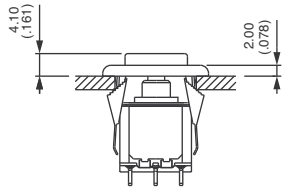

18800 + U910 + U1200

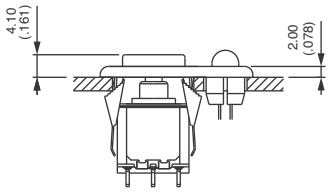

18800 + U910 + U1210

18000 series

Snap-action momentary pushbutton switches

- ❑ **For high currents**
- ❑ **Tactile feedback**

B2

ELECTRICAL SPECIFICATIONS

- Max. current/voltage rating with resistive load : 7A 30VDC
- Initial contact resistance : 20 mΩ max. at 0,1A 3VDC
- Insulation resistance : 200.000 MΩ min. between terminals and frame
- Dielectric strength : 1.500 Vrms 50 Hz min.
- Electrical life : 60.000 cycles at full load

GENERAL SPECIFICATIONS

- Travel : 0,90 mm (.035) approx.
- Operating temperature : -30°C to +85°C

MATERIALS

- Case : diallylphthalate (DAP)
- Actuator : glass filled polyester
- Bushing : brass, nickel plated
- Housing : stainless steel
- Contacts : silver
- Terminal seal : epoxy

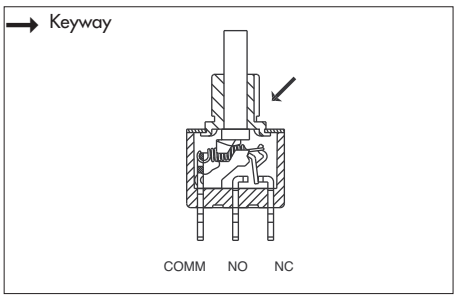

- Threaded bushing Ø 6,35 (1/4)
- Solder lug terminals
- Epoxy sealed terminals

MODEL STRUCTURE

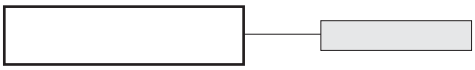

Single pole

18635A

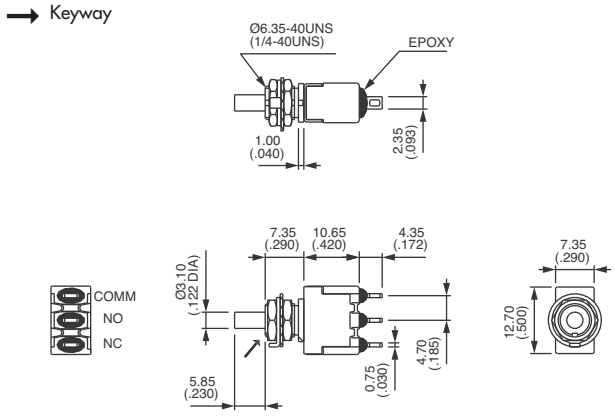

Double pole

18645A

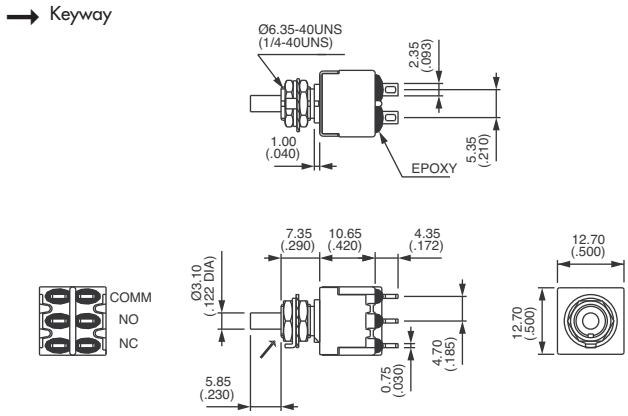

CAPS

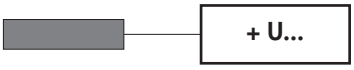

Round

U2400	Ø 5 (.196)
U2510	Ø 8 (.314)
U2130	Ø 9,4 (.370)
U2900	Ø 10 (.393)
U3400	Ø 15 (.590)

Square

U910	Height 4 (.157)
U2340	Height 6 (.236)

PANEL CUT-OUT

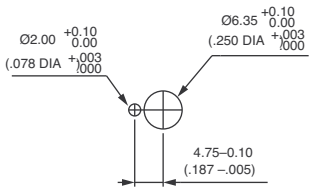

For cap dimensions, see "Caps for Ø 3,1 (.122) plungers" on the preceding pages.

AV series

Anti-vandal and security pushbutton switches

Distinctive features

- ❑ **Attractive, robust and durable**
  - **Irremovable**
  - **Anti-jamming construction : reduced travel to prevent insertion of foreign parts**
  - **Contact and mechanism protected against crushing**
  - **Fire resistant**
  - **Long life**
- ❑ **Different bushing sizes and actuator shapes**
- ❑ **Sealed versions**
- ❑ **Degree of protection of sealed versions (switches mounted on vertical panels) : IP65 to IP67 or IP69K depending on models**
- ❑ **UL/CSA approved models**

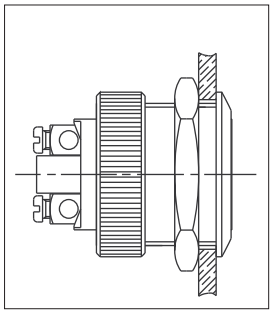

B2

The AV series is a large range of very robust pushbutton switches, consisting of 2 families :

ANTI-VANDAL PUSHBUTTON SWITCHES (pages 77-79)

- **Great robustness (impact resistance IK08 (Ø 19 mm) and IK10 (Ø 22 mm)**
- **Actuator and bushing : stainless steel**
- **Bushing Ø 19 mm (.748) or 22 mm (.866**

SECURITY PUSHBUTTON SWITCHES (pages 80-106)

- **Large variety of models**
- **Actuator and bushing : nickel plated, chrome plated or polished varnished brass, stainless steel**
- **Bushing diameter 16 mm (.629), 19 mm (.748), 22 mm (.866) or 24 mm (.944)**
- **Marking, illumination, tactile feedback**
- **Numerous electrical functions (momentary or maintained)**

EXAMPLES OF MOUNTING FOR SEALED VERSIONS → Gasket

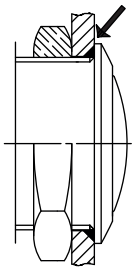

Preferred

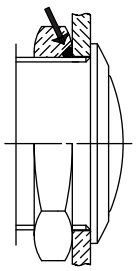

For thin panels

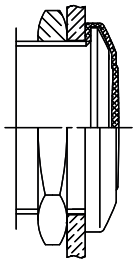

With boot U2187 (sect. H)

Dimensions : first dimensions are in mm while inches are shown as bracketed numbers.

Packaging unit : specified on the following pages.

Mounting accessories : Standard and special hardware are presented in section I.

Sealing boots are available for models with Ø 19 mm (.748) bushing. See Section H.

The company reserves the right to change specifications without notice.

- ❑ **Very robust**
  Impact resistance IK08 for model Ø 19 mm (.748) and IK10 for model Ø 22 mm (.866)

- ❑ **Stainless steel actuator and bushing**

- ❑ **UL-CSA approved (long case only)**

SPECIFICATIONS

- Max. current/voltage rating with resistive load :
  - A contacts : 4A 12VDC, 500.000 cycles
  - C contacts : 2A 48 VDC, 10.000 cycles
- Initial contact resistance : 10 mΩ max.
- Insulation resistance : 1.000 MΩ min. at 500VDC
- Dielectric strength : 2.000 Vrms 50 Hz min. between terminals and frame
  2.000 Vrms 50 Hz min. between terminals
- Torque : 5 Nm min.- 14 Nm max. applied to nut
- Panel thickness : 1 (.039) to 11 mm (.433) max.
- Operating temperature : -30°C to +70°C
- Low level or mechanical life : 1.000.000 cycles
- Hand soldering : 300°C, 3 sec. max.
- Packaging unit : 20 pieces (models Ø 22) or 40 pieces (models Ø 19)

MATERIALS

- Case : PBT
- Contacts : silver (A)
  or brass, silver plated (C)
- Bushing : stainless steel
- Actuator : stainless steel

CUT-OUT

- Panel cut-out :
  Ø 19,2 mm (.755)
  or Ø 22,2 mm (.874)
- Min. pitch for matrix mounting :
  30 mm x 30 mm (1.181x1.181)

ROBUSTNESS

	Model Ø 19 mm (.748)		Model Ø 22 mm (.866)	
Degree of protection according to EN 50102, June 95 (NFC 20-015)	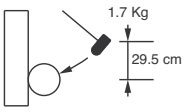 Hammer radius 25 mm	**IK08** Striking energy: 5 joules (5Nm)	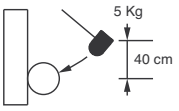 Hammer radius 50 mm	**IK10** Striking energy: 20 joules (20Nm)

Increased impact resistance provided by a nut or mechanical stop.

SEALING (OPTION T)

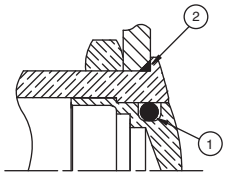

Front panel sealing (IP65)

① internal gasket ② external gasket

Option N does not include ① nor ②.

AV series

Anti-vandal pushbutton switches Ø 19 mm (.748)

Momentary (NO)

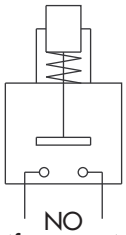

NO
(function 3)

ORDER FORMAT

AV			3			40	
SERIES	Actuator type	Case	Function	Contacts	Terminals	Bush./act. material	Sealing
	09 Flat 19 Curved 9D Flush	000 Long 100 Short	3 NO	A Silver C Brass, silver pl.	9 Screw 2 Quick-connect	40 Stainless steel	N No T Sealed

B2

In the following model numbers, replace • with elements selected in the above order format.

Flat actuator - short case - 48VDC - AV09100

Hex nut 22 (.866) across flats

Screw terminals
AV091003•940•

Solder lug /
quick-connect term.
AV091003•240•

Screw terminals for wires 1,5 mm² max.

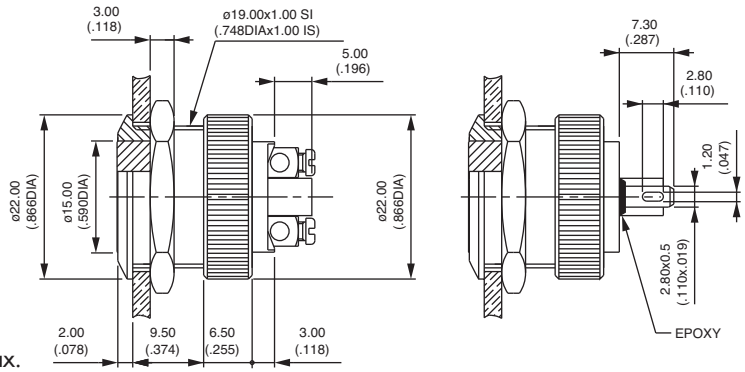

Flat actuator - long case - 4A 250VAC/8A125VAC - UL/CSA - AV09000

Hex nut 22 (.866) across flats

Screw terminals
AV090003A940•

To order switches **marked UL-CSA**, add "**UU**" at the end of model number.

Screw terminals for wires 1,5 mm² max.

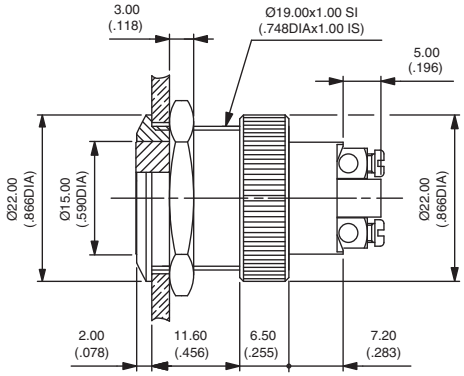

Curved actuator - AV19

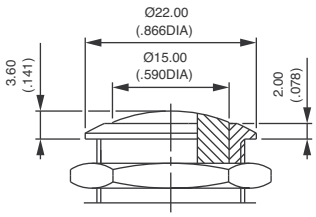

Screw terminals
AV19•003•940•
Solder lug/quick-connect term. (short case)
AV191003•240•

Flush model - AV9D

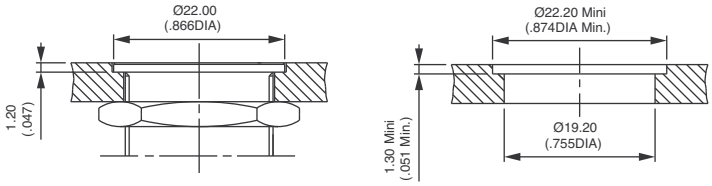

Panel cut-out

Screw terminals
AV9D•003•940•
Solder lug / quick-connect terminals (short case only)
AV9D1003•240•

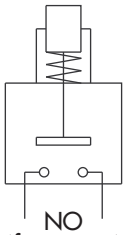

NO
(function 3)

ORDER FORMAT

AV			3			40	
SERIES	Bushing/act. configuration	Case	Function	Contacts	Terminals	Bush./act. material	Sealing
	03 Flat act. 02 Curved act. M3 Flat act + flatted bush. M2 Curved act.+ flatted bush.	000 Long 100 Short	3 NO	A Silver C Brass, silver pl.	9 Screw 2 Quick-connect	40 Stainless steel	N No T Sealed

In the following model numbers, replace • with elements selected in the above order format.

B2

Flat actuator - short case - 48VDC - AV03100

Hex nut 25 (.984) across flats

Screw terminals
AV031003•940•

Solder lug /
quick-connect term.
AV031003•240•

Screw terminals for wires 1,5 mm² max.

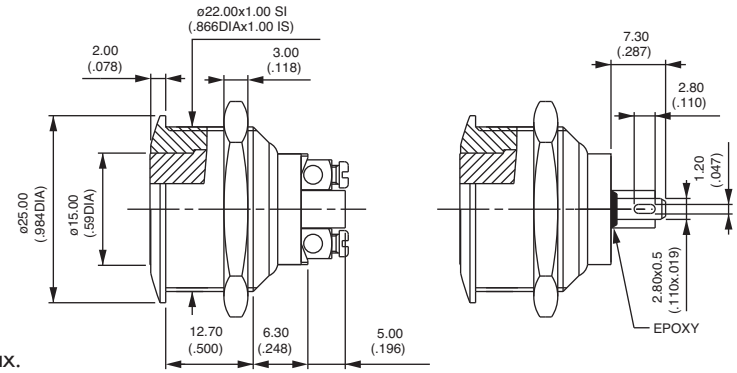

Flat actuator - long case - 4A 250VAC/8A125VAC - UL/CSA - AV03000

Hex nut 25 (.984) across flats

Screw terminals
AV030003A940•

To order switches **marked UL-CSA**, add "**UU**" at the end of model number.

Screw terminals for wires 1,5 mm² max.

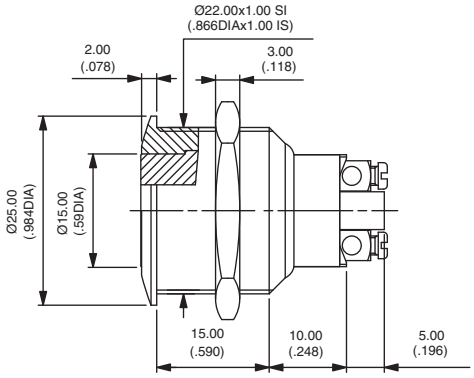

Curved actuator - AV02

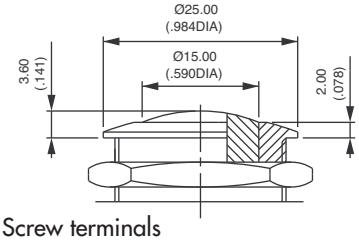

Screw terminals
AV02•003•940•
Solder lug / quick-connect (short case)
AV021003•240•

Flatted bushing - AVM3 and AVM2

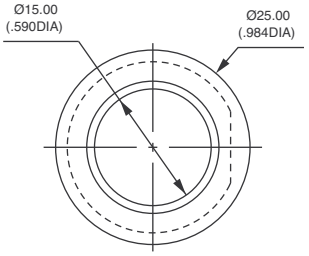

Flat actuator, screw terminals
AVM3•003•940•

Curved actuator, screw terminals
AVM2•003•940•

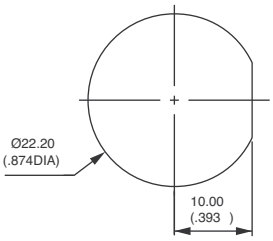

Panel cut-out

AV series

Snap action security pushbutton switches Ø 16 mm (.629)

Momentary (NO)

MODEL STRUCTURE

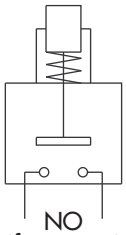

NO
(function 3)

ORDER FORMAT

AV		3	0	C	9	OPTIONS
SERIES	Bushing/act. configur.	Function	Case	Contacts	Terminals	See "Options" page.

Bushing/act. configur.
- **06** Flat actuator
- **16** Curved actuator
- **08** Curved act.+chamfer
- **07** Flat act.+chamfer
- **6P** Flat act.+knurled nut
- **6B** Curved act.+knurled nut

Function
- **3** NO

Case
- **0** Short

Contacts
- **C** Brass, silver pl.

Terminals
- **9** Screw

B2

SPECIFICATIONS

- **Travel : 1,60 mm** (.063) ± 0,3 mm (.011)
- Max. current/voltage rating with resistive load : 200mA 48 VDC - 100mA 48VDC
- Initial contact resistance : 50 mΩ max.
- Insulation resistance : 1.000 MΩ min. at 500VDC
- Dielectric strength : 2.000 Vrms 50 Hz min. between terminals and frame
- Electrical life : 50.000 cycles at 200mA 48VDC 100.000 cycles at 100mA 48VDC
- Torque : 5 Nm min.- 14 Nm max. applied to nut
- Panel thickness : 1 (.039) to 6 mm (.236) max.
- Operating temperature : -30°C to +70°C
- Low level or mechanical life : 1.000.000 cycles
- Packaging unit : 60 pieces

MATERIALS

- Case : PBT
- Contacts : brass, silver plated (C)
- Bushing and actuator : see "Options" page

CUT-OUT

- Panel cut-out : Ø 16,2 mm (.637)
- Min. pitch for matrix mounting : 24 mm x 24 mm (.944 x .944) (AV6P & AV6B : 20 mm x 20 mm)

To order a product, select a basic model below and add the desired options.

BASIC MODEL

Flat or curved actuator - screw terminals

Hex nut 19 (.748) across flats

Flat actuator
AV0630C9

Curved actuator
AV1630C9

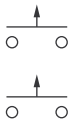

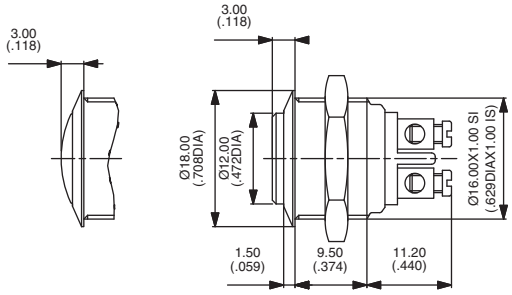

Screw terminals for wires 1,5 mm² max.

With chamfer

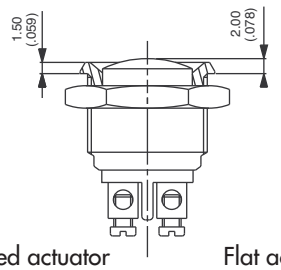

Curved actuator
AV0830C9

Flat actuator
AV0730C9

With knurled nut for matrix mounting 20 x 20 - AV6P and AV6B

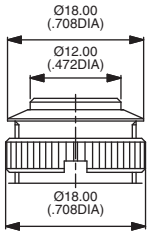

Flat actuator
AV6P30C9

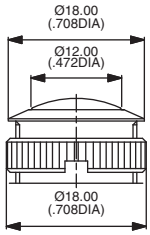

Curved actuator
AV6B30C9

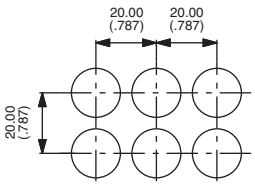

Wrench available under P/N **U1990.**

AV series

Security pushbutton switches Ø 16 mm (.629)

Latching action

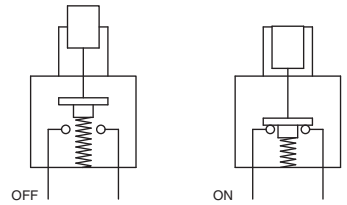

ORDER FORMAT

AV		1	1	A		OPTIONS
SERIES	Actuator	Function	Case	Contacts	Terminals	
	06 Flat 16 Curved	1 Off-On	1 Long	A Silver	2 Solder 4 PC 8 Quick-connect	See "Options" page.

SPECIFICATIONS

- Max. current/voltage rating with resistive load : 1A 24VDC
- Initial contact resistance : 50mΩ max.
- Insulation resistance : 1 GΩ min. at 500VDC
- Dielectric strength : 1.500 Vrms 50 Hz min. between terminals
  1 000 Vrms 50 Hz between terminals and frame
- Electrical life : 40.000 cycles
- Torque : 5 Nm min. - 14 Nm max. applied to nut
- Panel thickness : 1 (.039) to 6 mm (.236) max.
- Operating temperature : -30°C to +70°C
- Low level or mechanical life : 200.000 cycles
- Hand soldering : 300°C, 5 sec. max.
- Packaging unit : 25 pieces

MATERIALS

- Case : PA-6T, UL94-V0
- Contacts : silver (A)
  Gold plated silver (AD) on request
- Bushing and actuator : see "Options" page

CUT-OUT

- Panel cut-out : Ø 16,2 mm (.637)
- Min. pitch for matrix mounting : 24 mm x 24 mm (.944 x .944)

B2

To order a product, select a basic model below and add the desired options.

BASIC MODEL

Flat or curved actuator - solder lug terminals

Hex nut 19 (.748) across flats

Flat actuator
AV0611A2 OFF - ON

Curved actuator
AV1611A2 OFF - ON

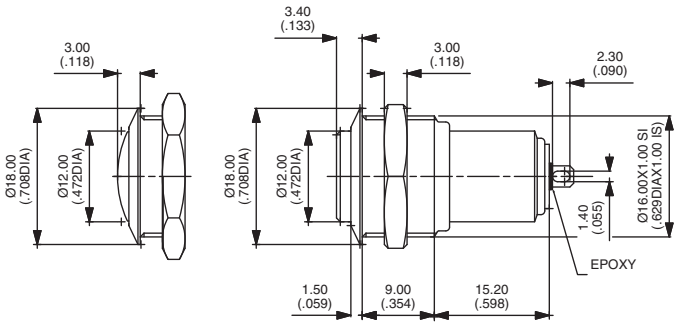

Straight PC terminals

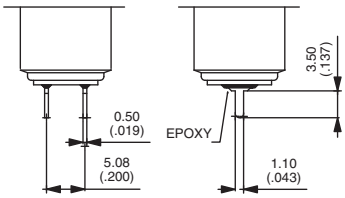

Flat actuator
AV0611A4

Curved actuator
AV1611A4

Quick-connect terminals

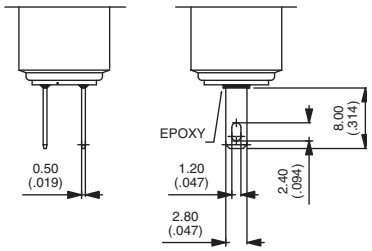

Flat actuator
AV0611A8

Curved actuator
AV1611A8

Options

After selecting basic model number, fill in last 2 boxes with desired options.

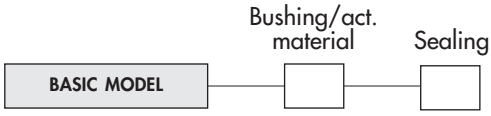

BUSHING/ACTUATOR MATERIALS

Flat or curved metal actuator

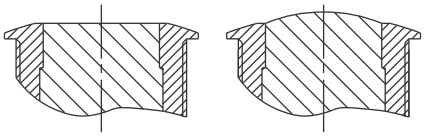

CODE	BUSHING	ACTUATOR
00 (standard)	**Nickel plated brass**	**Nickel plated brass**
10	Nickel plated brass	Stainless steel
40	Stainless steel	Stainless steel

SEALING

Blank No sealing

K Front panel sealing (IP65)

MODEL STRUCTURE

AV series

Security pushbutton switches Ø 19 mm (.748)

Momentary (NO)

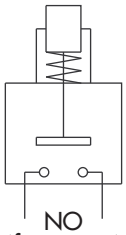

NO
(function 3)

ORDER FORMAT

AV			3			OPTIONS
SERIES	Bushing/act. config.	Case	Function	Contacts	Terminals	See "Options" page.
	09 Flat actuator **19** Curved actuator **9P** Flat act., knurled nut **9B** Curved act., knurled nut	**000** Long **100** Short	**3** NO	**A** Silver **C** Brass silver pl.	**9** Screw **2** Quick-connect	

SPECIFICATIONS

- Max. current/voltage rating with resistive load :
  - A contacts : 4A 12VDC, 500.000 cycles
  - C contacts : 2A 48 VDC, 10.000 cycles
- Approved ratings of models with long case and A contacts (AV..000) : UL-CSA : 4A 250VAC - 8A 125VAC - 6.000 cycles
- Initial contact resistance : 10 mΩ max.
- Insulation resistance : 1.000 MΩ min. at 500VDC
- Dielectric strength : 2.000 Vrms 50 Hz min. between terminals and frame 2.000 Vrms 50 Hz min. between terminals
- Torque : 5 Nm min.- 14 Nm max. applied to nut
- Panel thickness : 1 (.039) to 11 mm (.433) max.
- Operating temperature : -30°C to +70°C
- Low level or mechanical life : 1.000.000 cycles
- Hand soldering : 300°C, 3 sec. max.
- Packaging unit : 40 pieces

MATERIALS

- Case : PBT
- Contacts : silver (A) or brass, silver plated (C)
- Bushing and actuator : see "Options" page

CUT-OUT

- Panel cut-out : Ø 19,2 mm (.755)
- Min. pitch for matrix mounting : 30 mm x 30 mm (1.181x1.181) (AV9P & AV9B : 25 mm x 25 mm)

B2

To order a product, select a basic model below and add the desired options.

BASIC MODEL

Flat actuator - short case - 48VDC - AV09100

Hex nut 22 (.866) across flats

Screw terminals
AV091003•9

Solder lug / quick-connect term.
AV091003•2

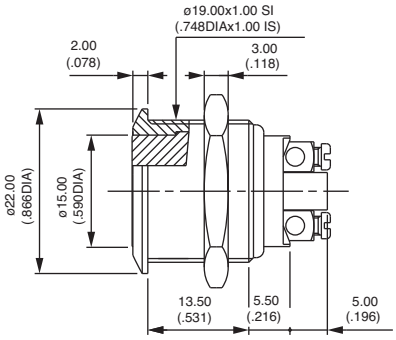

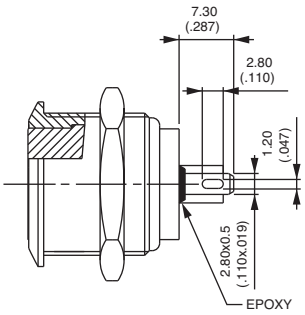

Screw terminals for wires 1,5 mm² max.

Contacts : remplace • with A (silver) or C (silver plated brass).

Curved actuator - short case

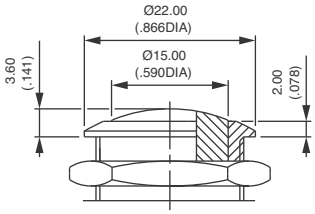

Screw terminals
AV191003•9
Solder lug / quick-connect terminals
AV191003•2

With knurled nut for matrix mounting 25 x 25 - AV9P and AV9B

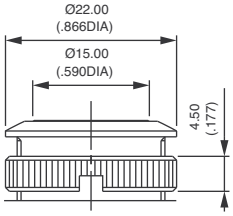

Flat actuator, screw terminals
AV9P1003•9
Flat actuator, solder lug term.
AV9P1003•2

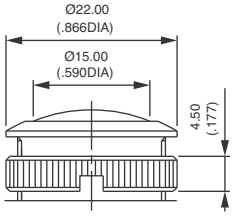

Curved actuator, screw terminals
AV9B1003•9
Curved actuator, solder lug term.
AV9B1003•2

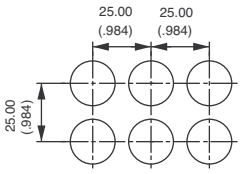

Wrench available under P/N **U1929**

AV series

Security pushbutton switches Ø 19 mm (.748)

Momentary (NO)

MODEL STRUCTURE

B2

Flat actuator - long case - 4A 250VAC/8A 125VAC - UL/CSA - AV09000

Hex nut 22 (.866) across flats

Screw terminals
AV090003A9

To order switches **marked UL-CSA**, add "**UU**" at the end of model number.

Screw terminals for wires 1,5 mm² max.

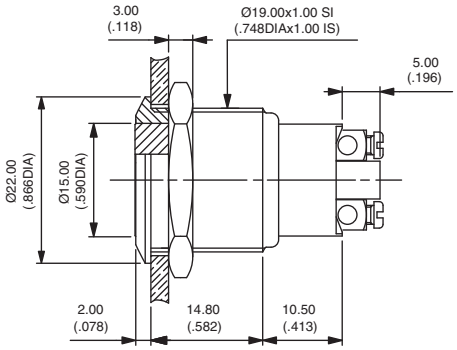

Curved actuator - long case

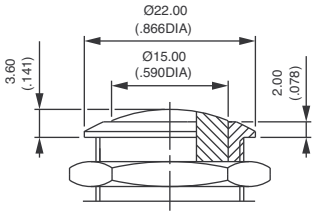

Screw terminals
AV190003A9

With knurled nut for matrix mounting 25 x 25 - AV9P and AV9B

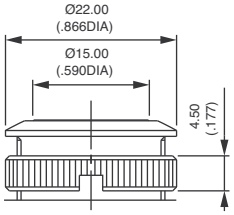

Flat actuator, screw terminals
AV9P0003A9

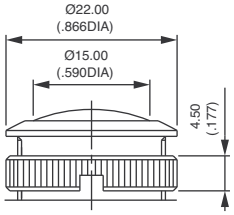

Curved actuator, screw terminals
AV9B0003A9

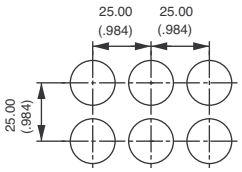

Wrench available under P/N **U1929**.

After selecting basic model number, fill in last 3 boxes with desired options.

BASIC MODEL	Bush./actuator material	Marking	Sealing

BUSHING/ACTUATOR MATERIALS

Flat or curved metal actuator

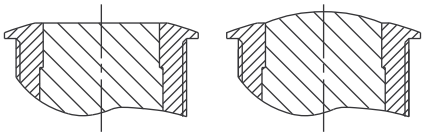

CODE	BUSHING	ACTUATOR
00 (standard)	**Nickel plated brass**	**Nickel plated brass**
10	Nickel plated brass	Stainless steel
12	Nickel plated brass	Chrome plated brass
20	Chrome plated brass	Chrome plated brass
30	Chrome plated brass	Stainless steel
40	Stainless steel	Stainless steel
80	Varnished polished brass	Varnished polished brass

Flat thermoplastic actuator

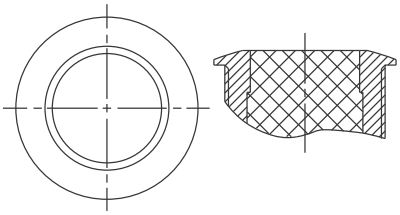

CODE	BUSHING	ACTUATOR COLOUR
0• (standard)	**Nickel plated brass**	Replace • with one of the following codes.
2•	Chrome plated brass	**1** : blue - **1/4** : dark blue - **2** : black - **3** : green
8•	Varnished polished brass	**4** : grey - **5** : yellow - **6** : red - **7/1**: white
		9 : orange

MARKING

- By engraving on flat or curved brass actuator (stainless steel on request)
- by hot stamping on flat thermoplastic actuator

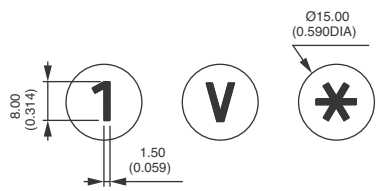

Select an option from each of the two tables below.

TYPE OF MARKING

CODE	TYPE
0 to 9	Numbers 0 to 9
X	Symbol *
Y	Symbol #
A to N	Letters A to N
P to W	Letters P to W
0	Letter O

Letter O : same code and same design as number 0.

For special symbols, consult factory.
Minimum order : 500 pieces

COLOUR OF MARKING

CODE	COLOUR
Brass actuator	
0 (standard)	Same as finish
2	Black

Note : a finished product supplied in version "0" cannot be modified to version "2".

Thermoplastic actuator	
2	Black
7	White

SEALING

Blank No sealing

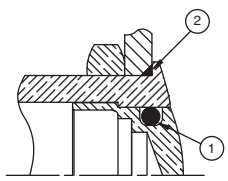

K Frontal panel sealing (IP65)

① internal gasket
② external gasket

AV series

Security pushbutton switches Ø 19 mm (.748)

Momentary (NC/NO)

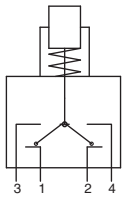

Combined NC/NO

ORDER FORMAT

Series	Bushing diameter	Bush./act. config.	Actuator style	Bush./act. matl	Contact/ terminals
AV	19	L	P B	40	7
				See below	

SPECIFICATIONS

- Max. current/voltage rating with resistive load :
  5A 250VAC - 5A 125VAC - 6.000 cycles
  5A 15VDC - 3A 30VDC - 50.000 cycles
- Initial contact resistance : 100 mΩ max.
- Insulation resistance : 1.000 MΩ min. at 500VDC
- Dielectric strength : 2.000 Vrms 50 Hz min. between term. and frame
- Torque : 5 Nm min.- 14 Nm max. applied to nut
- Panel thickness : 1 (.039) to 9 mm (.354) max.
- Operating temperature : -20°C to +85°C
- Low level or mechanical life : 1.000.000 cycles
- Front panel sealing : IP65 and IP69K
- Packaging unit : 20 pieces

MATERIALS

- Case : PA 6/6
- Contacts : silver
- Bushing : stainless steel (std)
- Actuator : stainless steel (std)

CUT-OUT

- Panel cut-out : Ø 19,2 mm (.755)
- Min. pitch for matrix mounting :
  30 mm x 30 mm (1.181x1.181)

All model numbers below are for switches with standard bushing/actuator material.

BASIC MODEL

Solder lug terminals - AV19..407

Flat actuator
AV19LP407

Curved actuator
AV19LB407

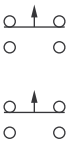

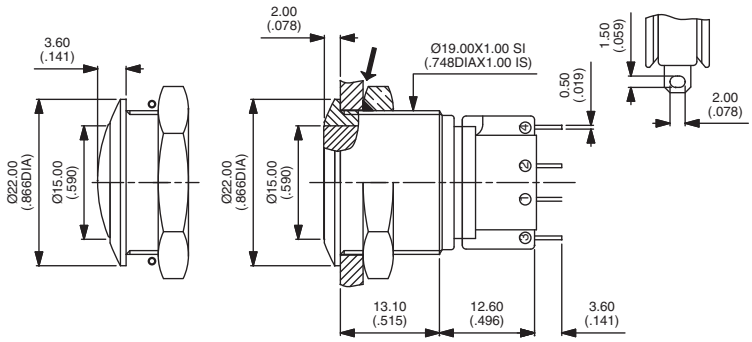

BUSHING/ACTUATOR MATERIALS

For non-standard material, replace **40** with one of the following codes.

CODE	BUSHING	ACTUATOR
00	Nickel plated brass	Nickel plated brass
20	Chrome plated brass	Chrome plated brass

MODEL STRUCTURE

AV series

Security pushbutton switches Ø 19 mm (.748)

With illuminated ring - momentary (NC/NO)

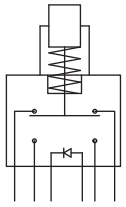

NC/NO

ORDER FORMAT

Options : see next page.

AV	9			2	
SERIES	Bushing dia. 19 mm	LED colour	LED resistor	Contacts	Terminals

LED colour
0 : no LED - **1** : blue - **V** : green
5 : yellow - **6** : red - **7** : white - **9** : amber

LED resistor
0 No resistor supplied
1 12VDC resistor
2 24VDC resistor
4 48VDC resistor

Contacts
2 Silver

Terminals
2 Solder / quick-connect
F Flying leads
C Cable

SPECIFICATIONS

- Travel : 2 mm ± 0,3 mm (.003)
- Max. current/voltage rating with resistive load : 1A 30VDC
- LED voltage : 12VDC, 24VDC or 48VDC
  (If not supplied by APEM, a resistor must be series-connected by the user)**
- Initial contact resistance : 100 mΩ max.
- Insulation resistance : 10 MΩ min. at 500VDC
- Dielectric strength : 500 Vrms 50 Hz min. between terminals
  1.000 Vrms 50 Hz min. between terminals and frame
- Electrical life : 250.000 cycles at full load
- Operating force : 5N ± 2N
- Torque : 5 Nm min.- 14 Nm max. applied to nut
- Panel thickness : 1 (.039) to 6 mm (.236) max.
- Low level or mechanical life : 1.000.000 cycles
- Operating temperature : -30°C to +85°C
- Hand soldering : 350°C, 5 seconds max.
- Packaging unit : flying lead/cable models : 1 piece - other models : 40 pieces

** Resistor value = $\frac{\text{supply voltage - LED forward voltage}}{\text{LED forward current}}$

MATERIALS

- Case : polyamide, glass filled
- Contacts : silver
- Bushing : see next page
- Actuator : see next page
- Elastomeric membrane : silicone
- LED

CUT-OUT

- Panel cut-out : Ø 19,2 mm (.755)
- Min. pitch for matrix mounting :
  30 mm x 30 mm (1.181x1.181)

To order a product, select a basic model below and add the desired LED colour and voltage. Then select the desired options on next page.

B2

Flat actuator - solder lug terminals

Hex nut 22 (.866) across flats

Illuminated (select LED colour above) *
AV9•022 ON - MOM

Non-illuminated
AV90022 ON - MOM

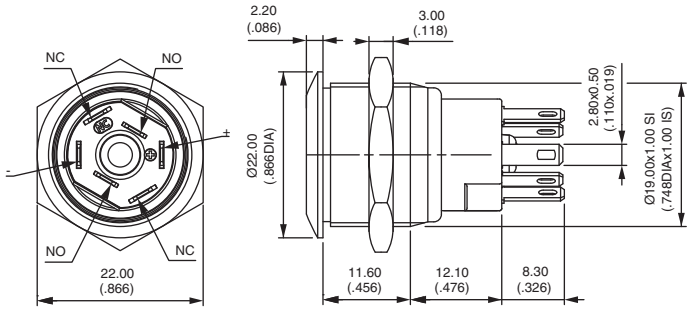

*** No LED resistor supplied on this model.**

Flat actuator - flying lead terminals

Hex nut 22 (.866) across flats

Illuminated (select LED colour & resistor above)
AV9••2F ON - MOM

Non-illuminated
AV9002F ON - MOM

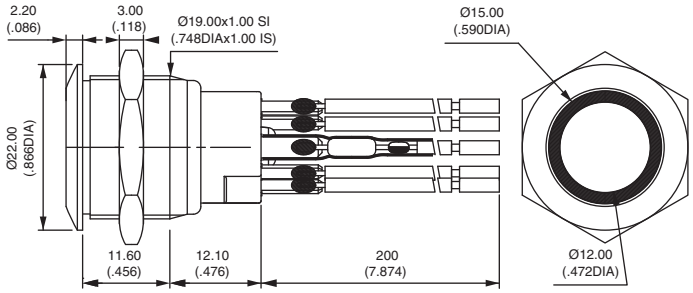

Wire colours : black: NC, orange: NO, red: LED anode (+), blue : LED cathode (-)

AV series

Security pushbutton switches Ø 19 mm (.748)

With illuminated ring - momentary (NC/NO)

OPTIONS

Flat actuator - cable terminals

Hex nut 22 (.866) across flats

Illuminated (select colour & resistor)
AV9••2C ON - MOM

Non-illuminated
AV9002C ON - MOM

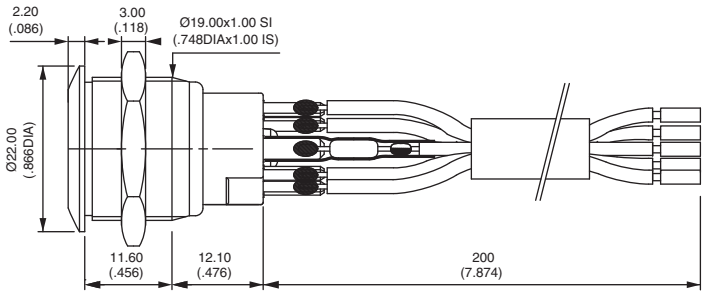

B2

After selecting basic model No., fill in last 5 boxes with desired options.

BASIC MODEL	Flying lead protection	Flying lead/ cable length	Ring colour	Bushing / plunger mat.	Sealing

FLYING LEAD PROTECTION

0	No protection and/or no flying leads
1	Heat-shrink sleeves
2	Tube + epoxy

FLYING LEAD/CABLE LENGTH

000	No flying leads / no cable
020	Length 20 cm (standard)
XXX	Length in centimeters

RING COLOURS

CODE	COLOUR	CODE	COLOUR
1	Blue	6	Red
2	Black *	7	Opal white (std)
3	Green	8	Translucent
4	Grey *	9	Orange
5	Yellow		

* non-illuminated only

BUSHING/PLUNGER MATERIALS

CODE	BUSHING	ACTUATOR
00	Nickel plated brass	Nickel plated brass
40	Stainless steel 303	Stainless steel 303
4A	Stainless steel 304	Stainless steel 304
4B	Stainless steel 316	Stainless steel 316
70	Chrome pl. brass, black	Chrome pl. brass, black

Other : on request.

SEALING

Blank No sealing

K Front panel sealing (IP67)

① internal membrane

② external gasket

AV series

Security pushbutton switches Ø 19 mm (.748)

Illuminated and non-illuminated - latching

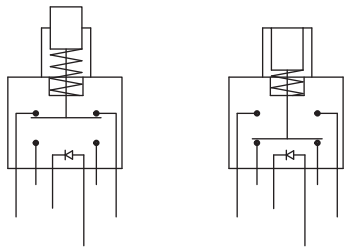

ORDER FORMAT

AV | [ ] | 1 | [ ] | [ ] | E | A | [ ] | OPTIONS

- **SERISE**: AV
- **Actuator type**: 09 Flat; 19 Curved
- **Bush./act. config.**: 1
- **Illumin.**: 0 No; L Illum.
- **LED colour**: 0 No LED; 1 Blue; 3 Green; 5 Yellow; 6 Red
- **Function**: E
- **Contacts**: A
- **Terminals**: 2 Solder; 4 PC; 8 Quick-connect
- **OPTIONS**: See next page.

SPECIFICATIONS

- Max. current/voltage rating with resistive load : 2A 48 VDC
- LED voltage and consumption : blue 3,5V 10mA, green : 2V 10mA yellow & red : 2V 20mA (a resistor must be series-connected by the user)**
- Initial contact resistance : 50 mΩ max.
- Insulation resistance : 1.000 MΩ min. at 500VDC
- Dielectric strength : 1 000 Vrms 50 Hz min. between terminals 500 Vrms 50 Hz min. between terminals and frame
- Electrical life : 500.000 cycles at 2A 48VDC
- Torque : 5 Nm min.- 14 Nm max. applied to nut
- Panel thickness : 1 (.039) to 9 mm (.354) max.
- Operating temperature : -30°C to +70°C
- Low level or mechanical life : 1.000.000 cycles
- Hand soldering : 300°C, 4 seconds max.
- Packaging unit : 20 pieces

** Resistor value = $\frac{\text{supply voltage - LED forward voltage}}{\text{LED forward current}}$

MATERIALS

- Case : PA6T UL94-V0
- Contacts : silver
- Bushing and actuator : see next page
- LED

CUT-OUT

- Panel cut-out : Ø 19,2 mm (.755)
- Min. pitch for matrix mounting : 30 mm x 30 mm (1.181 x 1.181)

To order a product, select a basic model below and add the desired options selected on next page.

Standard actuator position : the actuator is flush in the non-latched position and recessed in the latched position.

Non-illuminated - solder lug terminals

Hex nut 22 (.866) across flats

Flat actuator *
AV09100EA2 ON - ON

Curved actuator
AV19100EA2 ON - ON

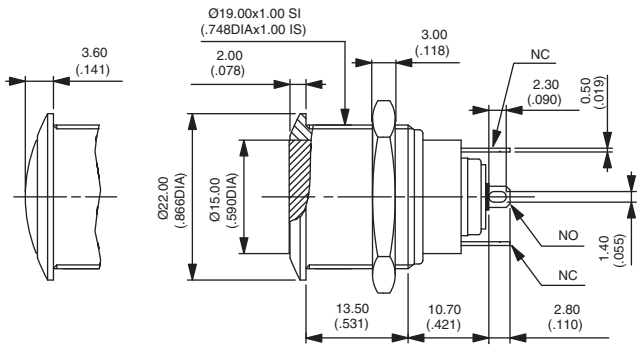

* Also available with prominent actuator in the non-latched position

Illuminated - solder lug terminals

Hex nut 22 (.866) across flats

Flat actuator
AV091L•EA2 ON - ON

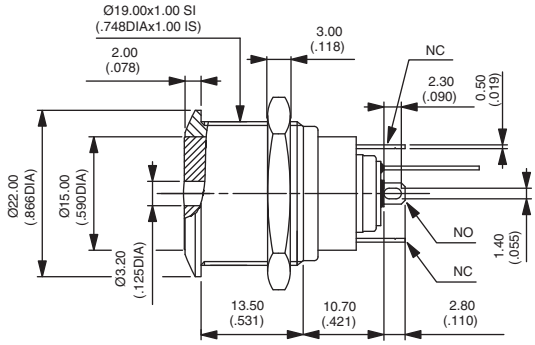

Replace • with desired LED colour.

AV series

Security pushbutton switches Ø 19 mm (.748)

Latching - Options

Straight PC terminals

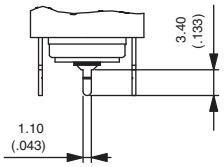

Replace 2 with **4** at the end of the model numbers shown on previous page.

Quick-connect terminals

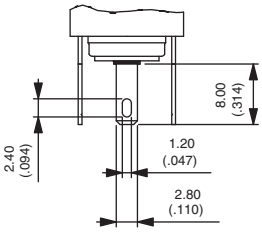

Replace 2 with **8** at the end of the model numbers shown on previous page.

B2

After selecting basic model number, fill in last 2 boxes with desired options.

BASIC MODEL	Bushing/ act. material	Sealing

BUSHING/ACTUATOR MATERIALS

CODE	BUSHING	ATUATOR
00 (std)	**Nickel plated brass**	**Nickel plated brass**
10	Nickel plated brass	Stainless steel
40	Stainless steel	Stainless steel
50	Stainless steel	Nickel plated brass

SEALING

Blank No sealing

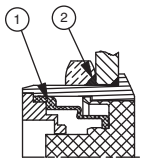

K Frontal panel sealing (IP65)

① elastomeric membrane
② external gasket

MODEL STRUCTURE

AV series

Tactile security pushbutton switches Ø 19 mm (.748)

Illuminated and non-illuminated - momentary (NO)

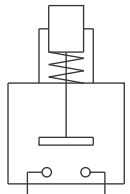

NO
(function 3)

ORDER FORMAT

AV		C7		3	D		OPTIONS
SERIES	Actuator type 09 Flat 19 Curved	Case	Illumin. 0 No L Illum.	Function	Contact	Terminals 2 Solder 9 Screw	See next page

SPECIFICATIONS

- **Travel : 0,7 mm** (.027) ±0,1 mm (.003)
- Max. current/voltage rating with resistive load : 50mA 24VDC
- LED voltage and consumption : 2-colour LED : 2V (3V max.) 20mA
  Other colours : 2V (3V max.) 10mA
  A resistor must be series-connected by the user **
- Initial contact resistance : 100 mΩ max.
- Insulation resistance : 1.000 MΩ min. at 500VDC
- Dielectric strength : 500 Vrms 50 Hz min. between terminals
  2.000 Vrms 50 Hz min. between terminals and frame
- Electrical life : 1.000.000 cycles at full load
- Operating force : 7 N ±2N
- Torque : 5 Nm min.- 14 Nm max. applied to nut
- Panel thickness : 1 (.039) to 6 mm (.236) max.
- Operating temperature : -30°C to +70°C
- Hand soldering : 270°C, 3 seconds max.
- Packaging unit : 40 pieces

** Resistor value = $\frac{\text{supply voltage - LED forward voltage}}{\text{LED forward current}}$

MATERIALS

- Case : PBT UL94-V0
- Terminals : brass, gold plated
- Contacts : gold plated dome
- Bushing and actuator : see next page
- LED

CUT-OUT

- Panel cut-out : Ø 19,2 mm (.755)
- Min. pitch for matrix mounting : 30 mm x 30 mm (1.181x1.181)

To order a product, select a basic model below and add the desired options selected on next page.

B2

Flat actuator - non-illuminated

Hex nut 22 (.866) across flats

Solder lug terminals
AV09C703D2

Screw terminals
AV09C703D9

Also available with curved actuator :
AV19C703D2 or **AV19C703D9**

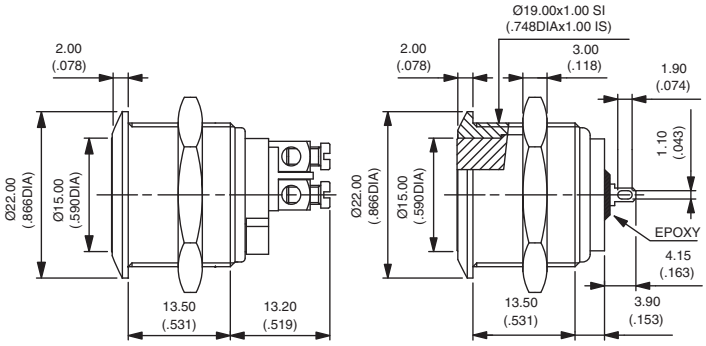

Flat actuator - illuminated

Hex nut 22 (.866) across flats

Solder lug terminals
AV09C7L3D2

Screw terminals
AV09C7L3D9

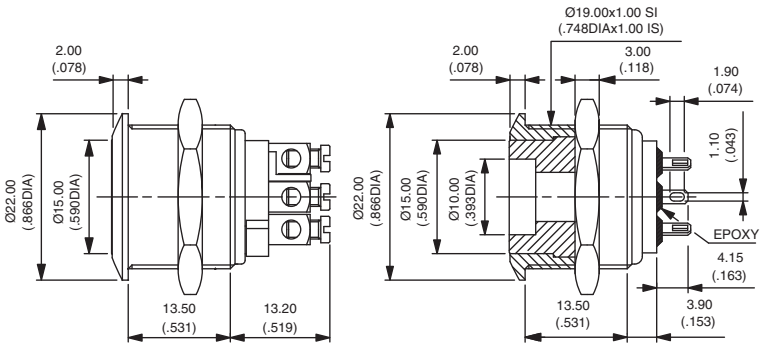

AV series

Tactile security pushbutton switches Ø 19 mm (.748)

Options

OPTIONS

After selecting basic model no., fill in last 4 boxes with desired options.

BASIC MODEL	Bushing/act. material	LED colour	Marking	Sealing

B2

BUSHING/ACTUATOR MATERIALS

Non-illuminated models

CODE	BUSHING	ACTUATOR
00 (std)	**Nickel plated brass**	**Nickel plated brass**
10	Nickel plated brass	Stainless steel
30	Chrome plated brass	Stainless steel
40	Stainless steel	Stainless steel
80	Varnished polished brass	Varnished polished brass

Illuminated models

CODE	BUSHING	ACTUATOR
00 (std)	**Nickel plated brass**	**Nickel plated brass**
20	Chrome plated brass	Chrome plated brass
40	Stainless steel	Stainless steel
50	Stainless steel	Nickel plated brass
80	Varnished polished brass	Varnished polished brass

LED COLOURS

Blank No LED

1: Blue - **3** : Green - **5** : Yellow - **6** : Red - **7** : White - **9** : Amber - **2 :** Red/green

MARKING

Select an option from each of the two tables below.

For **flat or curved actuator.**

- by engraving on non-illuminated brass actuator (stainless steel on request).
- by hot stamping on thermoplastic insert (illuminated actuators)

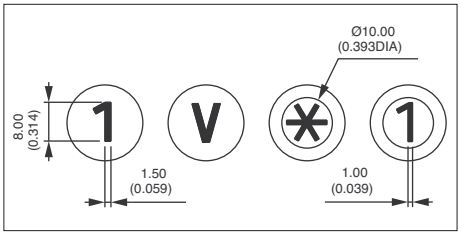

TYPE OF MARKING

CODE	TYPE
0 to 9	Numbers 0 to 9
X	Symbol *
Y	Symbol #
A to N	Letters A to N
P to W	Letters P to W
0	Letter O

Letter O : same code and same design as number 0.

For special symbols, consult factory.
Minimum order : 500 pieces

COLOUR OF MARKING

CODE	COLOUR
Non-illuminated actuators	
0 (standard)	Same as finish
2	Black

Note : a finished product supplied in version "0" cannot be modified to version "2".

Illuminated actuators	
2	Black (on white)

SEALING

Blank No sealing

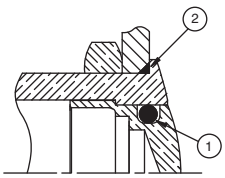

K Front panel sealing (IP65)

① internal gasket

② external gasket

MODEL STRUCTURE

AV series

Tactile security pushbuttons Ø 19 mm (.748) with overmolded actuator

Illuminated and non-illuminated - momentary (NO)

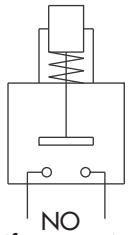

NO
(function 3)

ORDER FORMAT

AV	9		D		OPTIONS
SERIES	Bush./act. configuration	Illumination S0 No SL Illum.	Contacts	Terminals 2 Solder 9 Screw	See next page

SPECIFICATIONS

- **Travel : 0,7 mm** (.027) ± 0,1 mm (.003)
- Max. current/voltage rating with resistive load : 50mA 24VDC
- LED voltage and consumption : 2-colour LED : 2V (3V max.) 20mA
  Other colours : 2V (3V max.) 10mA
  (a resistor must be series-connected by the user)**
- Initial contact resistance : 100 mΩ max.
- Insulation resistance : 1.000 MΩ min. at 500VDC
- Dielectric strength : 500 Vrms 50 Hz min. between terminals
  2.000 Vrms 50 Hz min. between terminals and frame
- Electrical life : 1.000.000 cycles at full load
- Operating force : 7 N ±2N - Sealing option K will increase the operating force.
- Torque : 5 Nm min.- 14 Nm max. applied to nut
- Panel thickness : 1 (.039) to 6 mm (.236) max.
- Operating temperature : -30°C to +70°C
- Hand soldering : 270°C, 3 sec. max.
- Packaging unit : 16 pieces

** Resistor value = $\frac{\text{supply voltage - LED forward voltage}}{\text{LED forward current}}$

MATERIALS

- Case : PBT UL94-V0
- Terminals : brass, gold plated
- Contacts : gold plated dome
- Bushing : see next page
- Actuator : stainless steel, with thermoplastic overmolding
- LED

CUT-OUT

- Panel cut-out : Ø 19,2 mm (.755)
- Min. pitch for matrix mounting : 30 mm x 30 mm (1.181x1.181)

To order a product, select a basic model below and add the desired options selected on next page.

B2

Flat actuator - solder lug terminals

Hex nut 22 (.866) across flats

Illuminated
AV9SLD2

Non-illuminated
AV9S0D2

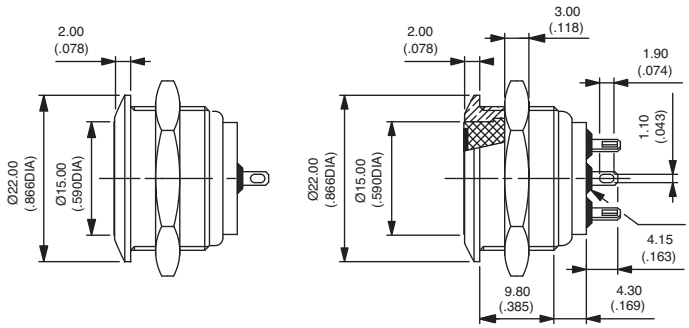

Also available with bushing Ø 22 (.866) : on request.

Flat actuator - screw terminals

Hex nut 22 (.866) across flats

Illuminated
AV9SLD9

Non-illuminated
AV9S0D9

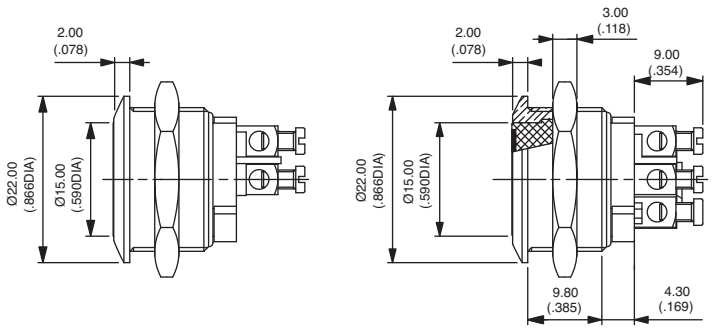

Also available with bushing Ø 22 (.866) : on request.

AV series

Tactile security pushbuttons Ø 19 mm (.748) with overmolded actuator

Options

OPTIONS

After selecting basic model no., fill in last 5 boxes with desired options.

BASIC MODEL	Bushing material	Over-molding	LED colour	Actuator type	Sealing

BUSHING MATERIALS

CODE	MATERIAL
0 (std)	**Nickel plated brass**
2	Chrome plated brass
4	Stainless steel
5	Gold plated brass
6	Chrome plated brass, satin
7	Chrome pl. brass, black
8	Varnished polished brass
9	Polished brass

OVERMOLDING COLOURS

CODE	COLOUR	CODE	COLOUR
1	Blue	6	Red
2	Black *	7	White
3	Green	8	Translucent
4	Grey *	9	Orange
5	Yellow		

* non-illuminated only

LED COLOURS

CODE	COLOUR
Blank	No LED
1	Blue
2	Red/green
3 **	Green
V **	Green, high intensity
5	Yellow
6	Red
7	White
9	Amber

** To order a green LED for actuator style 002, always use code V.
Other actuator styles can be ordered with LED code 3 or V.

ACTUATOR STYLES

The ring and symbols are obtained by photochemical engraving of a stainless steel insert.
The insert is then overmolded in the desired colour.

The following actuator styles are available. For other types, consult factory.

CODE	001	002	003	004	005
DESCRIPTION	Illuminated ring and disc	Illuminated ring	Arrow	Loudspeaker OFF	Opening
RING/SYMBOL					

CODE	006	008	009	010	011
DESCRIPTION	Validation	Closing	Standby	Cancel	Power
SYMBOL					

SEALING

Blank No sealing

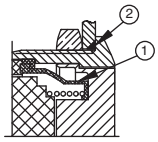

K Front panel sealing (IP67)

① internal membrane
② external gasket

Recommended panel mounting for IP69K

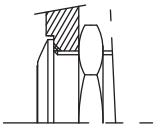

K Front panel sealing (IP69K)

MODEL STRUCTURE

AV series

Tactile security pushbuttons Ø 22 mm (.866) with overmolded actuator

Illuminated and non-illuminated - momentary (NO)

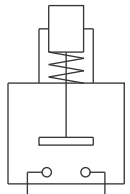

NO
(function 3)

ORDER FORMAT

AV	3		D		OPTIONS
SERIES	Bush./act. configuration	Illumination S0 No SL Illum.	Contacts	Terminals 2 Solder 9 Screw	See next page

SPECIFICATIONS

- **Travel : 0,7 mm** (.027) ± 0,1 mm (.003)
- Max. current/voltage rating with resistive load : 50mA 24VDC
- LED voltage and consumption : 2-colour LED : 2V (3V max.) 20mA
  Other colours : 2V (3V max.) 10mA
  (a resistor must be series-connected by the user)**
- Initial contact resistance : 100 mΩ max.
- Insulation resistance : 1.000 MΩ min. at 500VDC
- Dielectric strength : 500 Vrms 50 Hz min. between terminals
  2.000 Vrms 50 Hz min. between terminals and frame
- Electrical life : 1.000.000 cycles at full load
- Operating force : 7 N ±2N - sealing option K will increase the operating force.
- Torque : 5 Nm min.- 14 Nm max. applied to nut
- Panel thickness : 1 (.039) to 6 mm (.236) max.
- Operating temperature : -30°C to +70°C
- Hand soldering : 270°C, 3 sec. max.
- Packaging unit : 16 pieces

** Resistor value = $\frac{\text{supply voltage - LED forward voltage}}{\text{LED forward current}}$

MATERIALS

- Case : PBT UL94-V0
- Terminals : brass, gold plated
- Contacts : gold plated dome
- Bushing : see next page
- Actuator : stainless steel, with thermoplastic overmolding
- LED

CUT-OUT

- Panel cut-out : Ø 22,2 mm (.874)
- Min. pitch for matrix mounting : 30 mm x 30 mm (1.181x1.181)

To order a product, select a basic model below and add the desired options selected on next page.

B2

Flat actuator - solder lug terminals

Hex nut 25 (.984) across flats

Illuminated
AV3SLD2

Non-illuminated
AV3S0D2

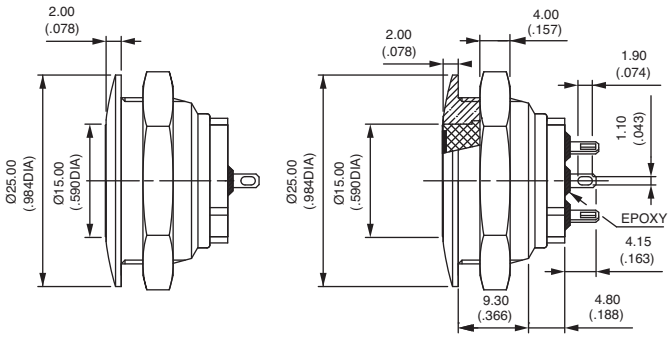

Flat actuator - screw terminals

Hex nut 25 (.984) across flats

Illuminated
AV3SLD9

Non-illuminated
AV3S0D9

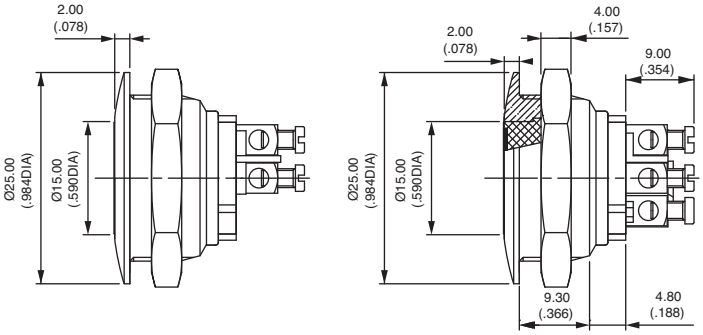

AV series

Tactile security pushbuttons Ø 22 mm (.866) with overmolded actuator

Options

After selecting basic model no., fill in last 5 boxes with desired options.

BASIC MODEL	Bushing material	Over-molding	LED colour	Actuator type	Sealing

BUSHING MATERIALS

CODE	MATERIAL
0 (std)	**Nickel plated brass**
2	Chrome plated brass
4	Stainless steel
5	Gold plated brass
6	Chrome plated brass, satin
7	Chrome pl. brass, black
8	Varnished polished brass
9	Polished brass

OVERMOLDING COLOURS

CODE	COLOUR	CODE	COLOUR
1	Blue	6	Red
2	Black *	7	White
3	Green	8	Translucent
4	Grey *	9	Orange
5	Yellow		

* non-illuminated only

LED COLOURS

CODE	COLOUR
Blank	No LED
1	Blue
2	Red/green
3 **	Green
V **	Green, high intensity
5	Yellow
6	Red
7	White
9	Amber

** To order a green LED for actuator style 002, always use code V.
Other actuator styles can be ordered with LED code 3 or V.

ACTUATOR STYLES

The ring and symbols are obtained by photochemical engraving of a stainless steel insert.
The insert is then overmolded in the desired colour.

The following actuator styles are available. For other types, consult factory.

CODE	001	002	003	004	005
DESCRIPTION	Illuminated ring and disc	Illuminated ring	Arrow	Loudspeaker OFF	Opening
RING/SYMBOL					

CODE	006	008	009	010	011
DESCRIPTION	Validation	Closing	Standby	Cancel	Power
SYMBOL					

SEALING

Blank No sealing

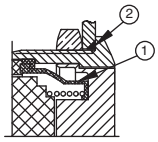

K Front panel sealing (IP67)

① internal membrane
② external gasket

Recommended panel mounting for IP69K

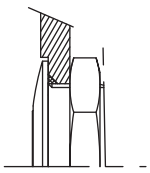

K Front panel sealing (IP69K)

MODEL STRUCTURE

AV series

Security pushbutton switches Ø 22 mm (.866)

Momentary (NO)

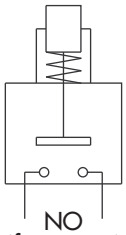

NO
(function 3)

ORDER FORMAT

AV			3			OPTIONS
SERIES	Bushing/act. configuration	Case	Function	Contacts	Terminals	See "Options" page.
	03 Flat actuator **02** Curved actuator **M2** Curved act.+flatted bush. **M3** Flat act.+flatted bush.	**000** Long **100** Short	**3** NO	**A** Silver **C** Brass, silver pl.	**9** Screw **2** Quick-connect	

SPECIFICATIONS

- Max. current/voltage rating with resistive load :
  - A contacts : 4A 12VDC, 500.000 cycles
  - C contacts : 2A 48 VDC, 10.000 cycles
- Approved ratings of models with long case and A contacts (AV..000) : UL-CSA : 4A 250VAC - 8A 125VAC - 6.000 cycles
- Initial contact resistance : 10 mΩ max.
- Insulation resistance : 1.000 MΩ min. at 500VDC
- Dielectric strength : 2.000 Vrms 50 Hz min. between terminals and frame 2.000 Vrms 50 Hz min. between terminals
- Torque : 5 Nm min.- 14 Nm max. applied to nut
- Panel thickness : 1 (.039) to 11 mm (.433) max.
- Operating temperature : -30°C to +70°C
- Low level or mechanical life : 1.000.000 cycles
- Hand soldering : 300°C, 3 sec. max.
- Packaging unit : 20 pieces

MATERIALS

- Case : PBT
- Contacts : silver (A) or brass, silver plated (C)
- Bushing and actuator : see "Options" page

CUT-OUTS

- Panel cut-out : Ø 22,2 mm (.874)
- Min. pitch for matrix mounting : 30 mm x 30 mm (1.181x1.181)

B2

To order a product, select a basic model below or on next page and add the desired options.

BASIC MODEL

Flat actuator - short case - 48VDC - AV03100

Hex nut 25 (.984) across flats

Screw terminals
AV031003•9

Solder lug / quick-connect term.
AV031003•2

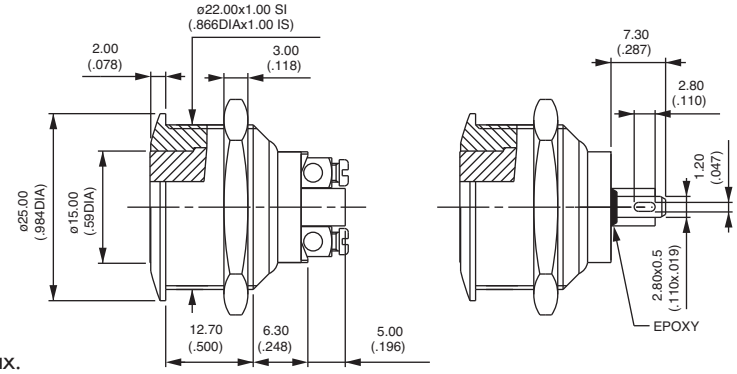

Screw terminals for wires 1,5 mm² max.

Contacts : remplace • with A (silver) or C (silver plated brass).

Curved actuator - short case

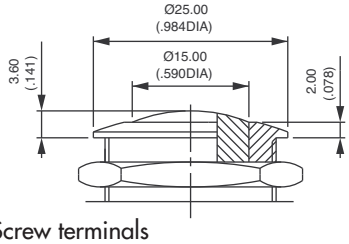

Screw terminals
AV021003•9
Solder lug / quick-connect terminals
AV021003•2

Flatted bushing - short case - AVM3 and AVM2

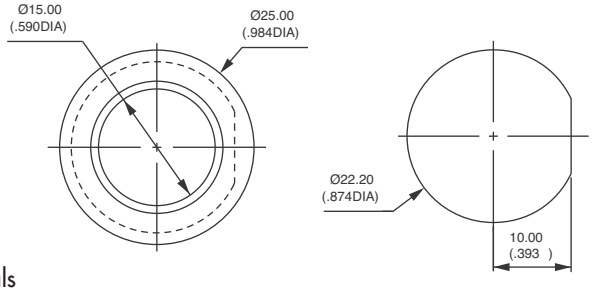

Flat actuator, screw terminals
AVM31003•9
Curved actuator, screw terminals
AVM21003•9

AV series

Security pushbutton switches Ø 22 mm (.866)

Momentary (NO) - momentary (NC) - alternate action

MODEL STRUCTURE

B2

Flat actuator - long case - 4A 250VAC/8A 125VAC - UL/CSA - AV03000

Hex nut 25 (.984) across flats

Screw terminals
AV030003A9

To order switches **marked UL-CSA**, add "**UU**" at the end of model number.

Screw terminals for wires 1,5 mm² max.

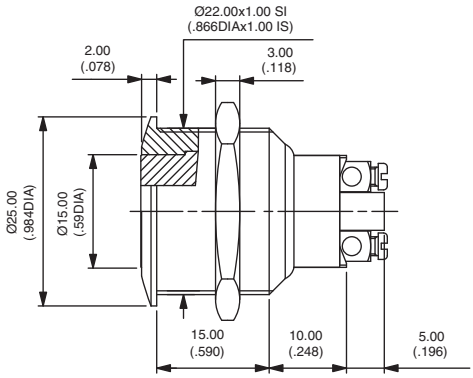

Curved actuator - long case

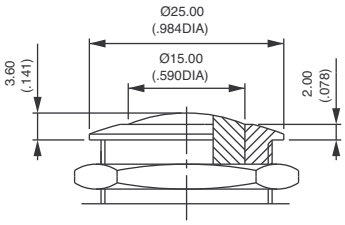

Screw terminals
AV020003A9

Flatted bushing - long case - AVM3 and AVM2

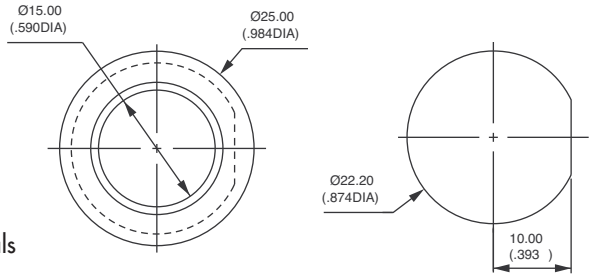

Flat actuator, screw terminals
AVM30003•9
Curved actuator, screw terminals
AVM20003•9

MOMENTARY NORMALLY CLOSED MODEL (NC)

Bushing Ø 22 (.866) - AV..1200

Hex nut 25 (.984) across flats

- **Single pole, screw terminals, without marking**
- Silver plated copper contacts (C)
- Max. current/voltage rating with resistive load :
  2A 250VAC - 3A 125VAC - 2,5A 24VDC
- Dielectric strength :
  2.000 Vrms 50 Hz min. betw. term. and frame
  2.000 Vrms. 50 Hz min. between terminals
- Electrical life : 100.000 cycles at 0,3A 24VAC or DC
  10.000 cycles at full load
- Packaging unit : 20 pieces

Flat actuator
AV031202C900

Curved actuator
AV021202C900

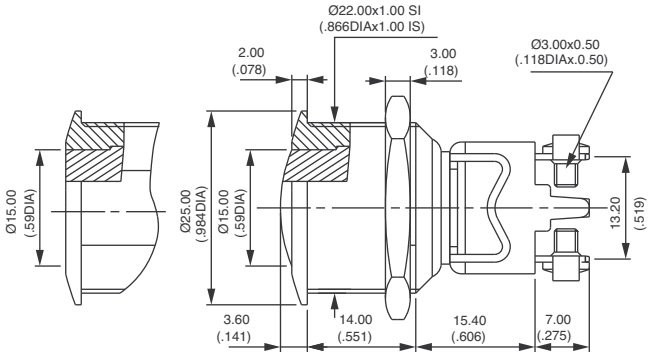

Bushing Ø 22 (.866) - alternate action - AV..4700

Hex nut 25 (.984) across flats

- **Double pole, solder lug/quick-connect term., curved actuator**
- Silver contacts
- Max. current/voltage rating with resistive load :
  3(1,5)A 250VAC - 6A 125VAC - 3A 24VAC or DC
- Dielectric strength :
  3.000 Vrms min. between terminals and frame
- Electrical life : 10.000 cycles at full load
  50.000 cycles at 1A 24VAC or DC
- Mechanical life : 100.000 cycles
- Packaging unit : 10 pieces

AV044746A200 ON - ON

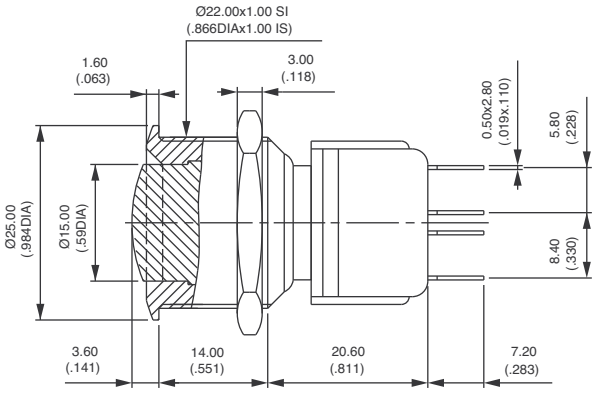

Further specifications : see previous page. Bushing/actuator materials, marking and sealing : see "options" on next page.

After selecting basic model number, fill in last 3 boxes with desired options.

BASIC MODEL	Bush./actuator material	Marking	Sealing

BUSHING/ACTUATOR MATERIALS

Flat or curved metal actuator

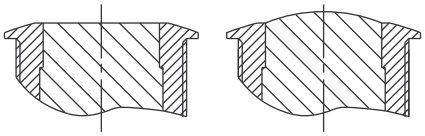

CODE	BUSHING	ACTUATOR
00 (standard)	**Nickel plated brass**	**Nickel plated brass**
10	Nickel plated brass	Stainless steel
12	Nickel plated brass	Chrome plated brass
20	Chrome plated brass	Chrome plated brass
30	Chrome plated brass	Stainless steel
40	Stainless steel	Stainless steel
80 **	Varnished polished brass	Varnished polished brass

Flat thermoplastic actuator

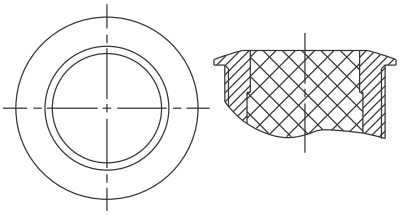

CODE	BUSHING	ACTUATOR COLOUR
0• (standard)	**Nickel plated brass**	Replace • with one of the following codes.
2•	Chrome plated brass	**1** : blue - **1/4** : dark blue - **2** : black - **3** : green
8•	Varnished polished brass	**4** : grey - **5** : yellow - **6** : red - **7/1**: white
		9 : orange

MARKING

- By engraving on flat or curved brass actuator (stainless steel on request)
- by hot stamping on flat thermoplastic actuator

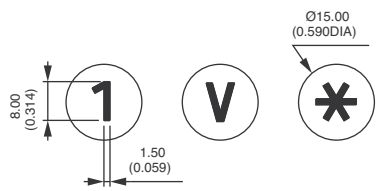

Select an option from each of the two tables below.

TYPE OF MARKING

CODE	TYPE
0 to 9	Numbers 0 to 9
X	Symbol *
Y	Symbol #
A to N	Letters A to N
P to W	Letters P to W
0	Letter O

Letter O : same code and same design as number 0.

For special symbols, consult factory.
Minimum order : 500 pieces

COLOUR OF MARKING

CODE	COLOUR
Brass actuator	
0 (standard)	Same as finish
2	Black

Note : a finished product supplied in version "0" cannot be modified to version "2".

Thermoplastic actuator	
2	Black
7	White

SEALING

Blank No sealing

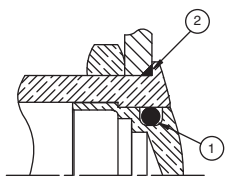

K Frontal panel sealing (IP65)

① internal gasket
② external gasket

AV series

Security pushbutton switches Ø 22 mm (.866)

With illuminated ring - momentary (NC/NO)

MODEL STRUCTURE

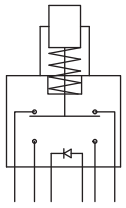

NC/NO

ORDER FORMAT

Options : see next page.

AV	3			2	
SERIES	Bushing dia. 22 mm	LED colour	LED resistor	Contacts	Terminals

LED colour
0 : no LED - **1** : blue - **V** : green
5 : yellow - **6** : red - **7** : white - **9** : amber

LED resistor
0 No resistor supplied
1 12VDC resistor
2 24VDC resistor
4 48VDC resistor

Contacts
2 Silver

Terminals
2 Solder / quick-connect
F Flying leads
C Cable

B2

SPECIFICATIONS

- Travel : 2 mm ± 0,3 mm (.003)
- Max. current/voltage rating with resistive load : 1A 30VDC
- LED voltage : 12VDC, 24VDC or 48VDC
  (If not supplied by APEM, a resistor must be series-connected by the user)**
- Initial contact resistance : 100 mΩ max.
- Insulation resistance : 10 MΩ min. at 500VDC
- Dielectric strength : 500 Vrms 50 Hz min. between terminals
  1.000 Vrms 50 Hz min. between terminals and frame
- Electrical life : 250.000 cycles at full load
- Operating force : 5N ± 2N
- Torque : 5 Nm min.- 14 Nm max. applied to nut
- Panel thickness : 1 (.039) to 6 mm (.236) max.
- Low level or mechanical life : 1.000.000 cycles
- Operating temperature : -30°C to +85°C
- Hand soldering : 350°C, 5 seconds max.
- Packaging unit : flying lead/cable models : 1 piece - other models : 40 pieces

** Resistor value = $\frac{\text{supply voltage - LED forward voltage}}{\text{LED forward current}}$

MATERIALS

- Case : polyamide, glass filled
- Contacts : silver
- Bushing : see next page
- Actuator : see next page
- Elastomeric membrane : silicone
- LED

CUT-OUT

- Panel cut-out : Ø 22,2 mm (.874)
- Min. pitch for matrix mounting :
  30 mm x 30 mm (1.181x1.181)

To order a product, select a basic model below and add the desired LED colour and voltage. Then select the desired options on next page.

Flat actuator - solder lug terminals

Hex nut 25 (.984) across flats

Illuminated (select LED colour above) *
AV3•022 ON - MOM

Non-illuminated
AV30022 ON - MOM

*** No LED resistor supplied on this model.**

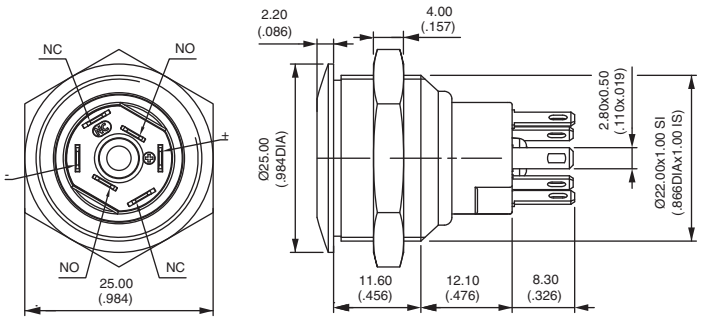

Flat actuator - flying lead terminals

Hex nut 25 (.984) across flats

Illuminated (select LED colour & resistor above)
AV3••2F ON - MOM

Non-illuminated
AV3002F ON - MOM

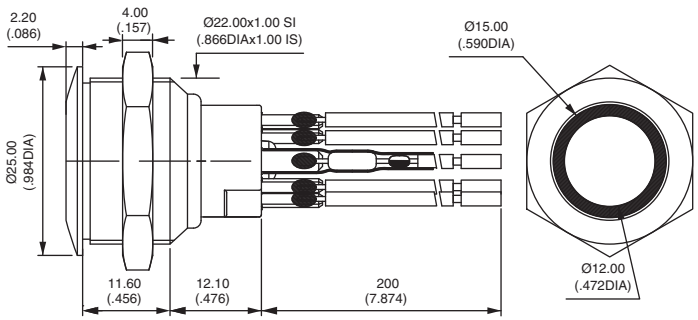

Wire colours : black: NC, orange: NO, red: LED anode (+), blue : LED cathode (-)

Flat actuator - cable terminals

Illuminated (select colour & resistor)
AV3••2C ON - MOM

Non-illuminated
AV3002C ON - MOM

Hex nut 25 (.984) across flats

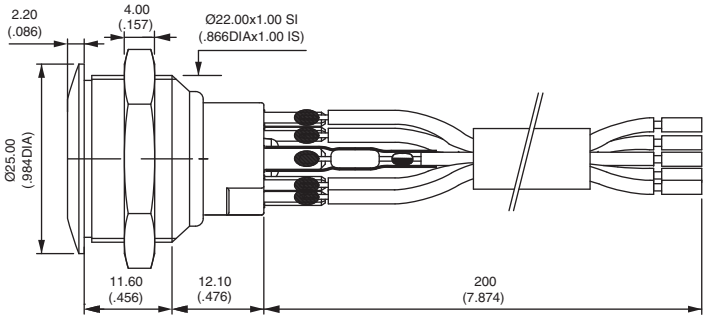

B2

After selecting basic model No., fill in last 5 boxes with desired options.

BASIC MODEL	Flying lead protection	Flying lead/ cable length	Ring colour	Bushing / plunger mat.	Sealing

FLYING LEAD PROTECTION

0	No protection and/or no flying leads
1	Heat-shrink sleeves
2	Tube + epoxy

WIRE/CABLE LENGTH

000	No flying leads / no cable
020	Length 20 cm (7.874) - standard
XXX	Length in centimeters

RING COLOURS

CODE	COLOUR	CODE	COLOUR
1	Blue	**6**	Red
2	Black *	**7**	Opal white (std)
3	Green	**8**	Translucent
4	Grey *	**9**	Orange
5	Yellow		

* non-illuminated only

BUSHING/PLUNGER MATERIALS

CODE	BUSHING	ACTUATOR
00	Brass, nickel plated	Brass, nickel plated
40	Stainless steel 303	Stainless steel 303
4A	Stainless steel 304	Stainless steel 304
4B	Stainless steel 316	Stainless steel 316
70	Chrome pl. brass, black	Chrome pl. brass, black

Other : on request.

SEALING

Blank No sealing

K Front panel sealing (IP67)

① internal membrane

② external gasket

AV series

Security pushbutton switches Ø 22 mm (.866)

Illuminated and non-illuminated - latching

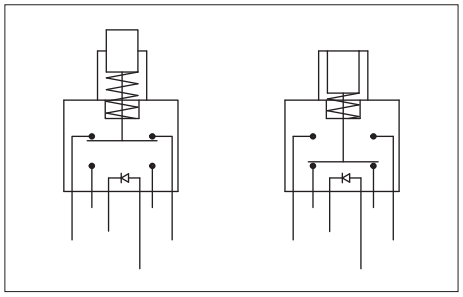

ORDER FORMAT

AV	[ ]	1	[ ]	[ ]	E	A	[ ]	OPTIONS
SERIES	Actuator type 03 Flat 02 Curved	Bush./act. config.	Illumin. 0 No L Illum.	LED colour 0 No LED 1 Blue 3 Green 5 Yellow 6 Red	Function	Contacts	Terminals 2 Solder 4 PC 8 Quick-connect	See next page.

SPECIFICATIONS

- Max. current/voltage rating with resistive load : 2A 48 VDC
- LED voltage and consumption : blue 3,5V 10mA, green : 2V 10mA yellow & red : 2V 20mA (a resistor must be series-connected by the user)**
- Initial contact resistance : 50 mΩ max.
- Insulation resistance : 1.000 MΩ min. at 500VDC
- Dielectric strength : 1 000 Vrms 50 Hz min. between terminals 500 Vrms 50 Hz min. between terminals and frame
- Electrical life : 500.000 cycles at 2A 48VDC
- Torque : 5 Nm min.- 14 Nm max. applied to nut
- Panel thickness : 1 (.039) to 9 mm (.354) max.
- Operating temperature : -30°C to +70°C
- Low level or mechanical life : 1.000.000 cycles
- Hand soldering : 300°C, 4 seconds max.
- Packaging unit : 20 pieces

** Resistor value = $\frac{\text{supply voltage - LED forward voltage}}{\text{LED forward current}}$

MATERIALS

- Case : PA6T UL94-V0
- Contacts : silver
- Actuator and bushing : see next page
- LED

CUT-OUT

- Panel cut-out : Ø 22,2 mm (.874)
- Min. pitch for matrix mounting : 30 mm x 30 mm (1.181x1.181)

To order a product, select a basic model below and add the desired options selected on next page.

Standard actuator position : the actuator is flush in the non-latched position and recessed in the latched position.

Non-illuminated - solder lug terminals

Hex nut 25 (.984) across flats

Flat actuator *
AV03100EA2 ON - ON

Curved actuator
AV02100EA2 ON - ON

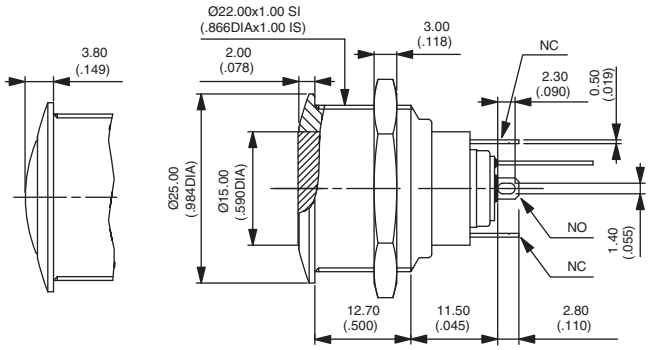

* Also available with prominent actuator in the non-latched position

Illuminated - solder lug terminals

Hex nut 25 (.984) across flats

Flat actuator
AV031L•EA2 ON - ON

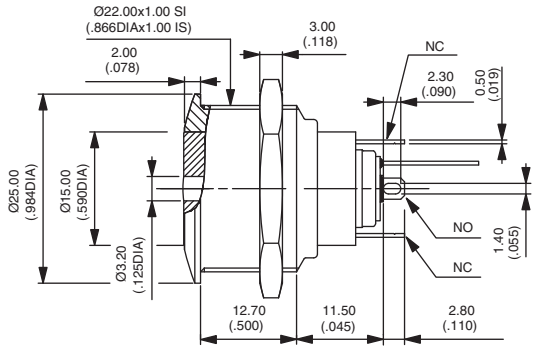

Replace • with desired LED colour.

Straight PC terminals

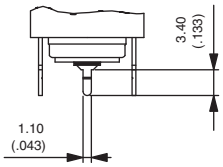

Replace 2 with **4** at the end of the model numbers shown on previous page.

Quick-connect terminals

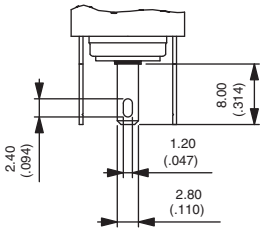

Replace 2 with **8** at the end of the model numbers shown on previous page.

After selecting basic model number, fill in last 2 boxes with desired options.

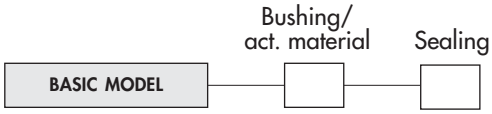

BUSHING/ACTUATOR MATERIALS

CODE	BUSHING	ACTUATOR
00 (std)	**Nickel plated brass**	**Nickel plated brass**
10	Nickel plated brass	Stainless steel
40	Stainless steel	Stainless steel
50	Stainless steel	Nickel plated brass

SEALING

Blank No sealing

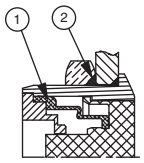

K Frontal panel sealing (IP65)

① elastomeric membrane
② external gasket

AV series

Security pushbutton switches Ø 22 mm (.866) or 24 mm (.944) with large actuator

Momentary (combined NC+NO)

MODEL STRUCTURE

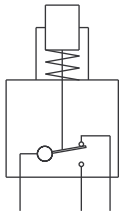

Combined NC+NO

ORDER FORMAT

AV		L		OPTIONS	
SERIES	Bushing diameter **22** 22 mm **24** 24 mm	Bush./act. config.	Act. style **P** Flat **B** Curved **C** Recessed	Bush./actuator material See next page	Terminals **4** Quick-connect **2** Solder lug

B2

SPECIFICATIONS

- Max. current/voltage rating with resistive load : 5A 250VAC
- Initial contact resistance : 100 mΩ max.
- Insulation resistance : 1.000 MΩ min. at 500VDC
- Dielectric strength : 2.000 Vrms 50 Hz min. between terminals and frame
- Electrical life : 1.000.000 cycles at 1A 250VAC
  100.000 cycles at full load
- Torque : 5 Nm min.- 14 Nm max. applied to nut
- Panel thickness : 1 (.039) to 6 mm (.236) max.
- Operating temperature : -20°C to +55°C
- Low level or mechanical life : 3.000.000 cycles
- Front panel sealing : IP65
- Hand soldering : 300°C, 5 sec. max.
- Packaging unit : 20 pieces (except black chrome plated : 16 pieces)

MATERIALS

- Case : polyester, glass filled
- Contacts : silver/nickel alloy
- Bushing and actuator :
  see next page.

CUT-OUT

- Panel cut-out : Ø 22,2 mm (.874) or Ø 24,2 mm (.952)
- Min. pitch for matrix mounting :
  30 mm x 30 mm (1.181x1.181)
  or 33 mm x 33 mm (1.299x1.299)

To order a product, select a basic model below or on next page and add the desired bushing/actuator materials.

BASIC MODEL

Flat actuator - AV22LP

Quick-connect terminals
AV22LP••4

Solder lug terminals
AV22LP••2

→ O-ring

Hex nut 25 (.984) across flats

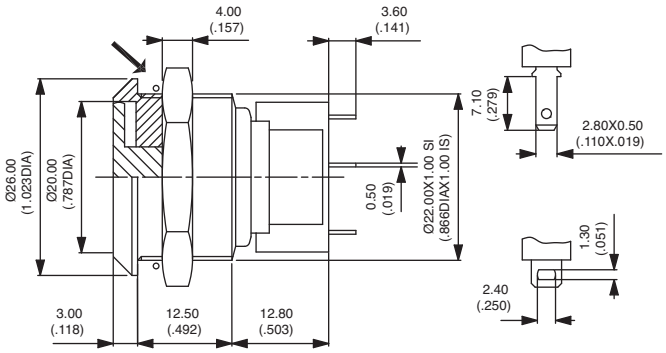

Curved actuator - AV22LB

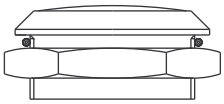

Quick-connect terminals
AV22LB••4
Solder lug terminals
AV22LB••2

Recessed actuator - AV22LC

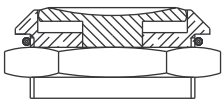

Quick-connect terminals
AV22LC••4
Solder lug terminals
AV22LC••2

BASIC MODEL

Flat actuator - low profile - AV24LP

Quick-connect terminals
AV24LP••4

Solder lug terminals
AV24LP••2

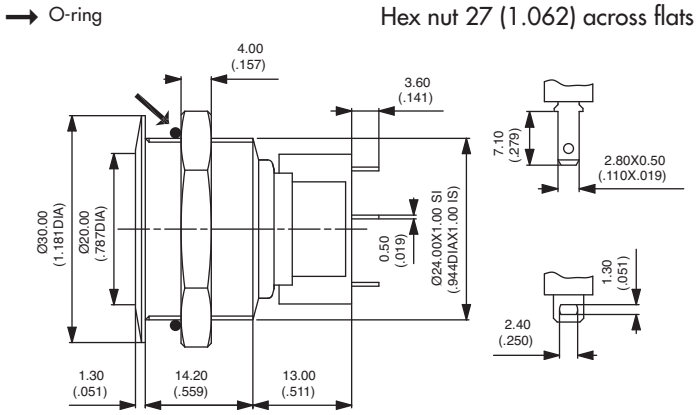

Curved actuator - AV24LB

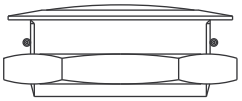

Quick-connect terminals
AV24LB••4
Solder lug terminals
AV24LB••2

Recessed actuator - AV24LC

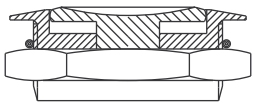

Quick-connect terminals
AV24LC••4
Solder lug terminals
AV24LC••2

BUSHING/ACTUATOR MATERIALS

Models with non-anodized actuator

CODE	BUSHING	ACTUATOR
40 (standard)	**Stainless steel**	**Stainless steel**
20	Chrome plated brass	Chrome plated brass

Models with anodized actuator

CODE	BUSHING	ACTUATOR COLOUR
1•	Black chrome plated brass	Replace • with one of the following codes :
2•	Chrome plated brass	**1** : blue - **2** : black - **3** : pale green - **3F** : dark green - **4** : natural - **5** : gold yellow
4•	Stainless steel	**6** : red - **6B** : maroon

AV series

Mushroom head security pushbutton switches Ø 22 mm (.866)

Momentary (combined NC+NO)

MODEL STRUCTURE

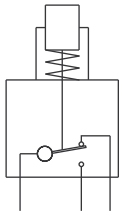

Combined NC+NO

ORDER FORMAT

AV	22	PNA	OPTIONS	
SERIES	Bushing diameter	Bush./act. config.	Actuator colour See below	Terminals 4 Quick-connect 2 Solder lug

B2

SPECIFICATIONS

- Max. current/voltage rating with resistive load : 5A 250VAC
- Initial contact resistance : 100 mΩ max.
- Insulation resistance : 1.000 MΩ min. at 500VDC
- Dielectric strength : 2.000 Vrms 50 Hz min. between terminals and frame
- Electrical life : 1.000.000 cycles at 1A 250VAC
  50.000 cycles at full load
- Torque : 5 Nm min.- 14 Nm max. applied to nut
- Panel thickness : 1 (.039) to 6 mm (.236) max.
- Operating temperature : -20°C to +55°C
- Low level or mechanical life : 1.000.000 cycles
- Front panel sealing : IP65
- Hand soldering : 300°C, 5 sec. max.
- Packaging unit : 16 pieces

MATERIALS

- Case : polyester, glass filled
- Contacts : silver/nickel alloy
- Bushing : brass, nickel plated
- Actuator : aluminium, anodized

CUT-OUT

- Panel cut-out : Ø 22,2 mm (.874)
- Min. pitch for matrix mounting : 30 mm x 30 mm (1.181x1.181)

To order a product, select a basic model below and add the desired actuator colour.

BASIC MODEL

Mushroom head actuator - AV22PNA

Quick-connect terminals
AV22PNA•4

Solder lug terminals
AV22PNA•2

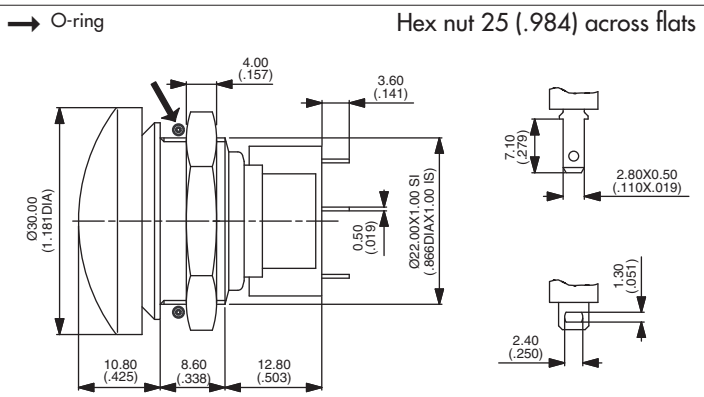

ACTUATOR ANODIZATION COLOURS

1 : blue - **2** : black - **3** : pale green - **3F** : dark green - **4** : natural - **5** : gold yellow - **6** : red - **6B** : maroon

1200 series

Momentary pushbutton switches - round plunger

Distinctive features and specifications

- ❑ **Butt action contacts, double break**
- ❑ **NF (EN 61058-1), UL and CSA approved**

B2

ELECTRICAL SPECIFICATIONS

- Max. current/voltage rating with resistive load :
  - silver contacts (A) : 4A 250VAC - 8A 125VAC - 4A 24VDC - 8A 12VDC
  - silver plated copper contacts (C) : 2A 250VAC - 3A 125VAC - 2A 24VDC - 3A 12VDC
- Initial contact resistance : 10 mΩ
- Insulation resistance : 1.000 MΩ min. at 500VDC
- Dielectric strength :
  2.000 Vrms 50 Hz min. between terminals
  3.000 Vrms 50 Hz min. between terminals and frame
- Electrical life : 10.000 cycles at full load

MATERIALS

- Case : polyamide
- Plunger : polyamide
- Bushing : brass, nickel plated
- Contacts :
  A : silver
  C : copper, silver plated

GENERAL SPECIFICATIONS

- Torque : 1,50 Nm (1.10 Ft.lb) max. applied to nut
- Panel thickness :
  5 mm (.196) max.
- Total travel :
  NO : 4,5 (.177) +/- 0,3 (.011)
  NC : 3,5 (.137) +/- 0,3 (.011)
- Operating temperature :
  -20°C to +55°C

AGENCY APPROVALS

NF EN 61058-1 — 2A 250VAC or 4A 250VAC, T55/125°C
All models

4A 250VAC - 8A 125VAC
All models function 3 (NO)

Models 1233X209 and 1233X209L are standard marked NF.
To order switches marked NF, UL or CSA, complete appropriate box of ordering format.

ABOUT THIS SERIES

Dimensions : first dimensions are in mm while inches are shown as bracketed numbers.

Sealing boots are available to protect the switches against dust and water. They are presented in section H.

Mounting accessories : standard hardware supplied :
- silver contact models : 1 hex nut U166 and 1 knurled nut U411
- copper contact models : 1 hex nut U42 and 1 knurled nut U411

Standard and special hardware are presented in section I.

Packaging unit : 40 pieces, except model 1200.L (50 pieces).

The company reserves the right to change specifications without notice.

1200 series

Momentary pushbutton switches - round plunger

Solder lug/quick-connect terminals - screw terminals

MODEL STRUCTURE

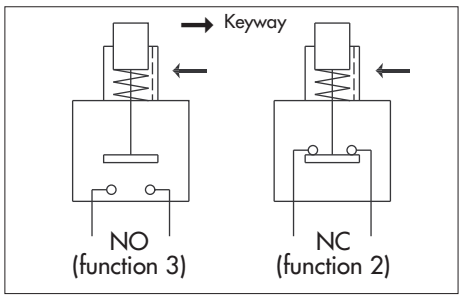

- Single pole configurations
- Approved models : see following pages
- Panel cut-out : Ø 12,2 (.480)

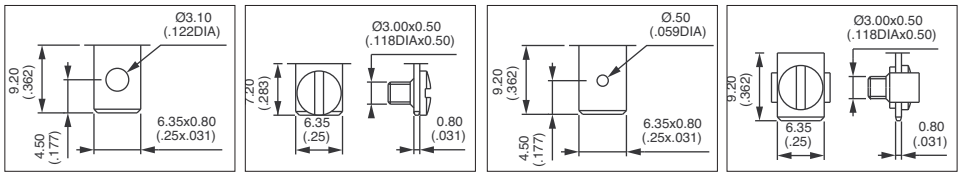

121. 122. 123. 120.

MODEL STRUCTURE

Plunger height : NO model : 7,50 mm, NC model : 5,80 mm

B2

Solder lug/quick-connect terminals

1212		Normally Closed
1213		Normally Open

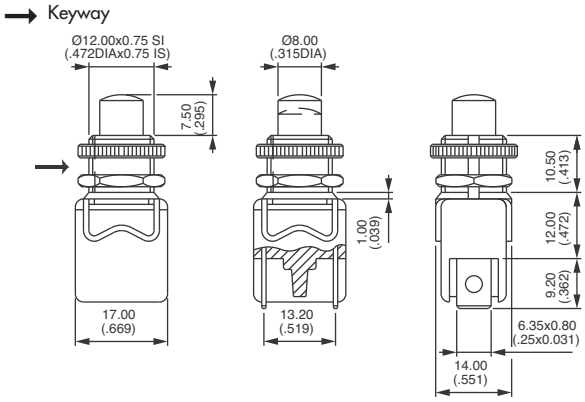

Screw terminals

1222		Normally Closed
1223		Normally Open

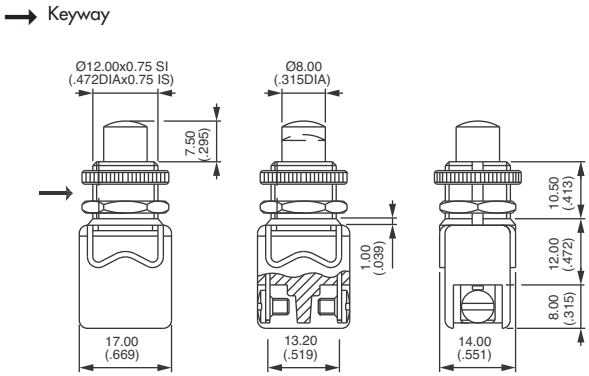

Normalized quick-connect terminals

1232		Normally Closed
1233		Normally Open

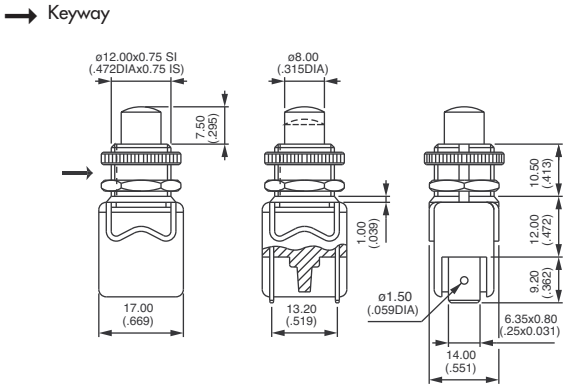

1200 series

Momentary pushbutton switches - round plunger

Plunger height : NO model : 7,50 mm, NC model : 5,80 mm

Straight screw terminals + clamp

1202		Normally Closed
1203		Normally Open

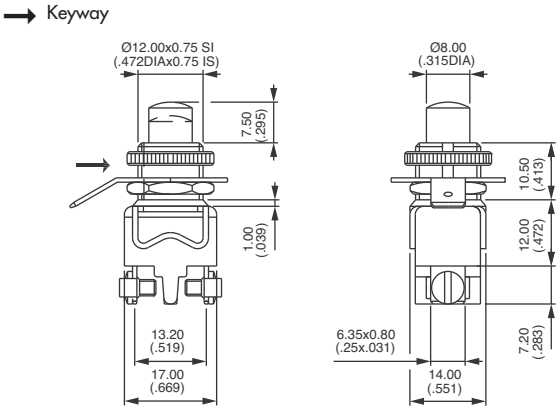

Right angle screw terminals + clamp

1203-7		Normally Open

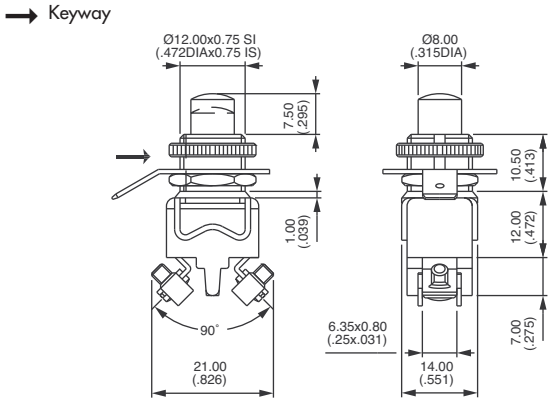

CONTACT MATERIALS

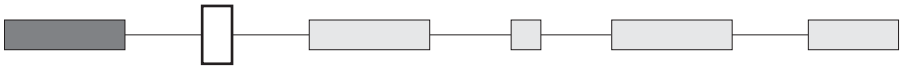

A Silver
C Copper, silver plated

FINISH

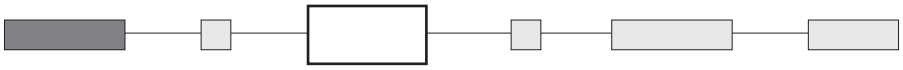

LUXE Chrome plated cap nut U117 instead of knurled nut U411

PLUNGER COLOURS

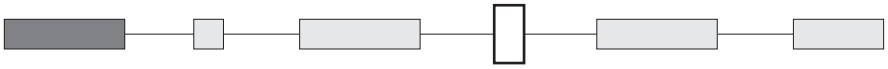

2 : Black - **3** : Green - **6** : Red - **7/1** : White

1200 series

Momentary pushbutton switches - round plunger

OPTIONS

SPECIAL MODELS

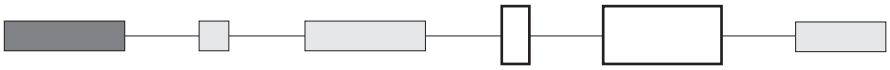

X209 NF standard marked - Silver contacts

1233A•X209 Normally open

Replace • with the desired plunger colour.

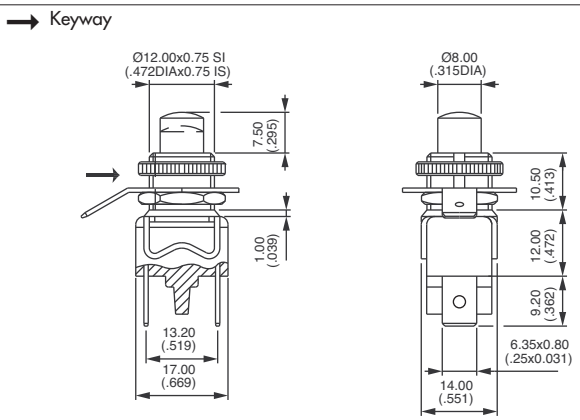

X209L NF standard marked - Silver contacts

1233A•X209L Normally open

Replace • with the desired plunger colour.

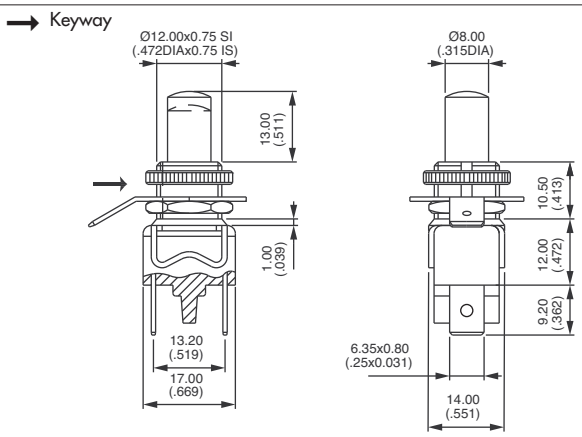

NOTE : Ground connector **U187** compulsory on models X209 and X209L if the panel is not metallic or not connected to ground. Order separately : see section I.

AGENCY APPROVALS

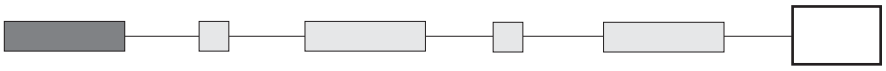

NF All models

UL-CSA All models function 3 (NO), including X209 and X209L

Marking : to order switches marked NF, UL or CSA, complete above box with desired approvals.

1200M/MR series

Robust momentary pushbutton switches - metal plunger

Distinctive features and specifications

- ❑ **Butt action contacts, double break**
- ❑ **UL and CSA approved**

B2

ELECTRICAL SPECIFICATIONS

- Max. current/voltage rating with resistive load :
  - silver contacts (A) : 4A 250VAC - 8A 125VAC - 4A 24VDC - 8A 12VDC
  - silver plated copper contacts (C) : 2A 250VAC - 3A 125VAC - 2A 14VDC - 3A 12VDC
- Initial contact resistance : 10 mΩ max.
- Insulation resistance : 1.000 MΩ min. at 500VDC
- Dielectric strength :
  2.000 Vrms 50 Hz min. between terminals
  3.000 Vrms 50 Hz min. between terminals and frame
- Electrical life : 10.000 cycles at full load

MATERIALS

- Case : polyamide
- Plunger : top chrome plated brass on polyamide base
- Bushing : brass, nickel plated
- Cap nut : brass, chrome plated
- Contacts : **A** : silver
  C : copper, silver plated

GENERAL SPECIFICATIONS

- Torque : 1,50 Nm (1.10 Ft.lb) max. applied to nut
- Panel thickness : 4,5 mm (.177) max.
- Total travel :
  NO : 4,5 mm (.177) +/- 0,3 (.011)
  NC : 3,5 mm (.137) +/- 0,3 (.011)
- Operating temperature : -20°C to +55°C

AGENCY APPROVALS

4A 250VAC - 8A 125VAC

Availability : approved models are 1213A and 1203A (M or MR) (model 1223A is only UL approved).

Marking : to order switches marked UL or CSA, complete appropriate box of ordering format.

ABOUT THIS SERIES

Dimensions : first dimensions are in mm while inches are shown as bracketed numbers.

Mounting accessories : standard hardware supplied with all models : 1 hex nut U166 and 1 conic cap nut U1866-6. Special cap nut U1874 is presented on the following pages.

Packaging unit : 40 pieces

The company reserves the right to change specifications without notice.

1200M/MR series

Robust momentary pushbutton switches - metal plunger

Solder lug/quick-connect terminals - screw terminals

MODEL STRUCTURE

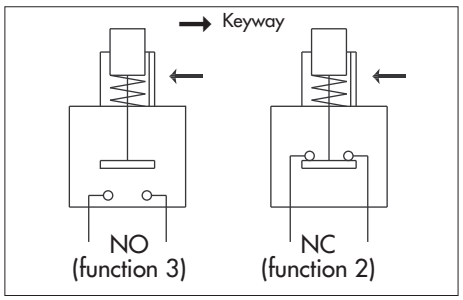

- Flat or curved plunger
- Panel cut-out Ø 12,2 (.480)
- Single pole

121.

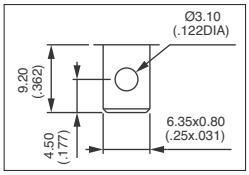

122.

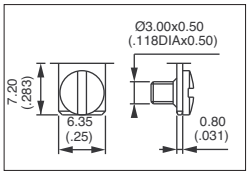

120.

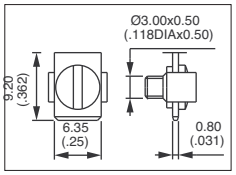

MODEL STRUCTURE

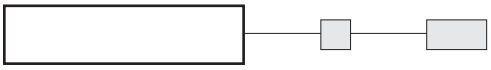

B2

Solder lug/quick-connect terminals 6,35 x 0,8 (.250 x .031)

Curved plunger	Flat plunger		
1212MR	**1212M**		NC
1213MR	**1213M**		NO

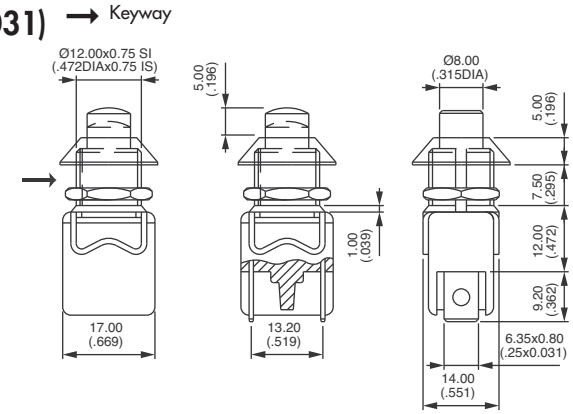

Screw terminals

Curved plunger	Flat plunger		
1222MR	**1222M**		NC
1223MR	**1223M**		NO

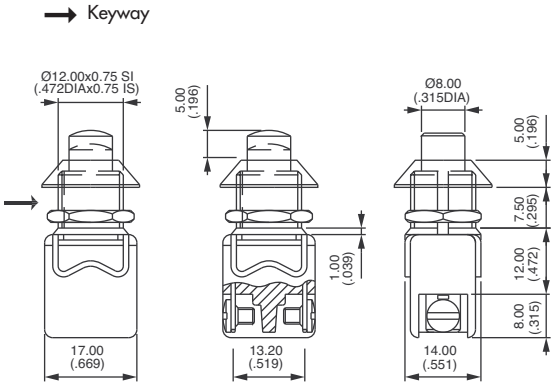

Screw terminals + clamp

Curved plunger	Flat plunger		
1202MR	**1202M**		NC
1203MR	**1203M**		NO

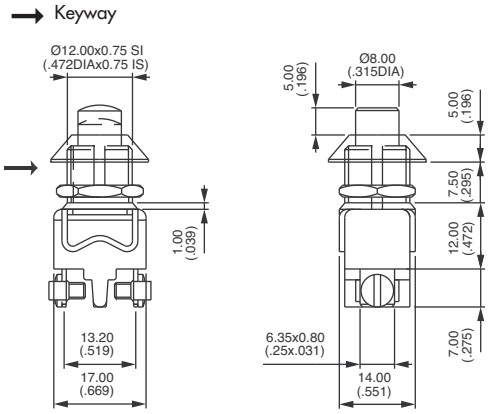

CONTACT MATERIALS

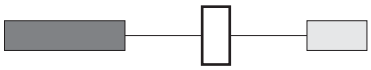

A Silver
C Copper, silver plated

AGENCY APPROVALS

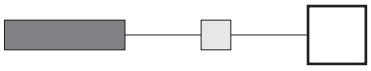

UL - CSA

Availability : approved models are 1213A and 1203A (M or MR) - model 1223A is only UL approved.

Marking : to order switches marked UL or CSA, complete above box with desired approvals.

SPECIAL CAP NUT

Chrome plated cap nut Ø 16 (.629), flat and plain.
Can be supplied instead of standard cap nut U1866-6.
Order separately.

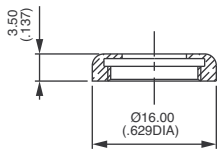

U1874

1400N series

Momentary pushbutton switches - snap-in mounting - square plunger

Distinctive features and specifications

- ❑ **Butt action contacts, double break**
- ❑ **Solder lug, straight PC and quick-connect terminals**

B2

ELECTRICAL SPECIFICATIONS

- Max. current/voltage rating with resistive load :
  - silver contacts (A) : 6A 12VDC
  - silver plated copper contacts (C) : 3A 12VDC
- Initial contact resistance : 10 mΩ
- Insulation resistance : 1.000 MΩ min. at 500VDC
- Dielectric strength :
  1.500 Vrms 50 Hz min. between terminals
  2.000 Vrms 50 Hz min. between terminals and metal panel
- Electrical life : 10.000 cycles at full load

MATERIALS

- Case : polyamide
- Plunger : polyamide
- Contacts :
  A : silver
  C : copper, silver plated

GENERAL SPECIFICATIONS

- Panel thickness : 2 mm (.078) max.
- Operating temperature : -20°C to +55°C

Dimensions : first dimensions are in mm while inches are shown as bracketed numbers.

Packaging unit : 60 pieces.

The company reserves the right to change specifications without notice.

MODEL STRUCTURE

1400N series

Momentary pushbutton switches - snap-in mounting - square plunger

Solder lug, straight PC or quick-connect terminals

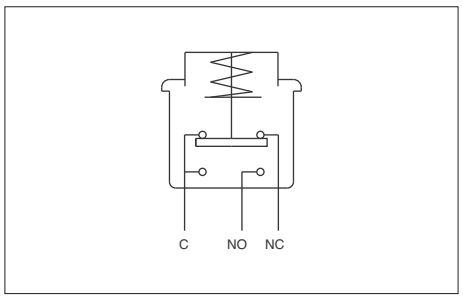

• Single pole configurations

141.N

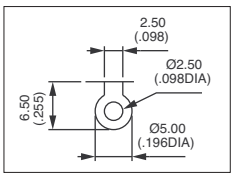

144.N

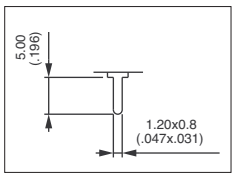

141.N/8

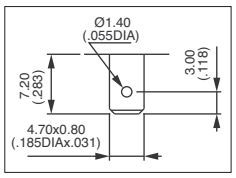

MODEL STRUCTURE

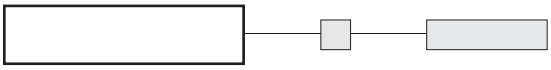

B2

Solder lug terminals

1412N		Normally Closed
1413N		Normally Open
1415N		Changeover

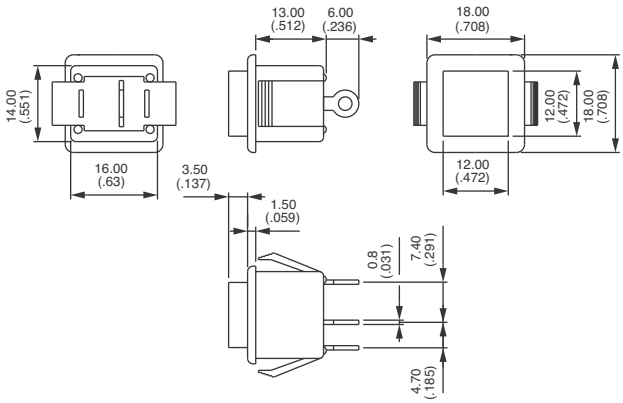

Straight PC terminals

1442N		Normally Closed
1443N		Normally Open
1445N		Changeover

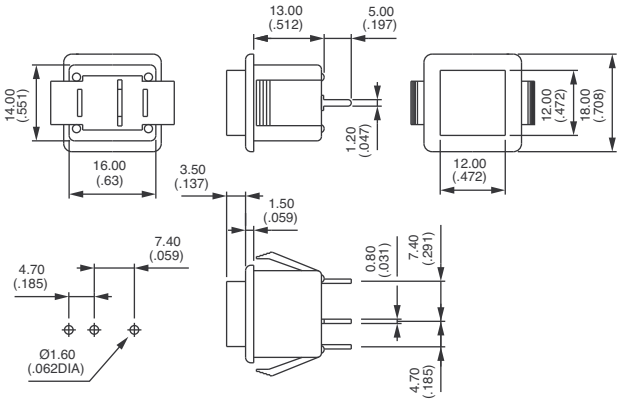

Quick-connect terminals 4,7 x 0,8 (.185 x .031)

1412N/8		Normally Closed
1413N/8		Normally Open
1415N/8		Changeover

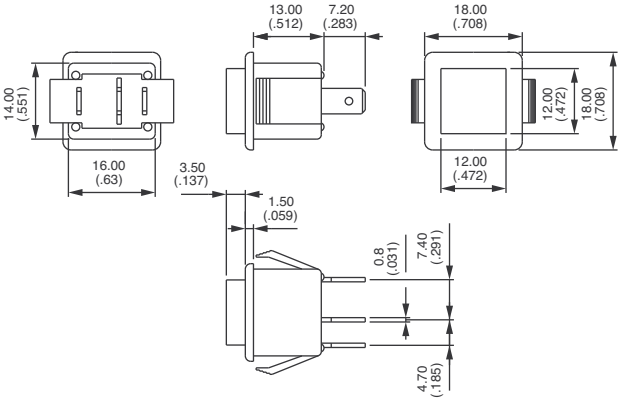

1400N series

Momentary pushbutton switches - snap-in mounting - square plunger

OPTIONS

PANEL CUT-OUT

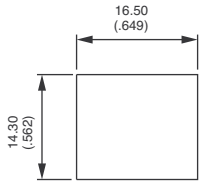

B2

CONTACT MATERIALS

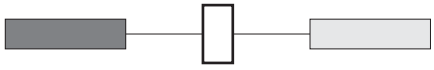

A	Silver
C	Copper, silver plated

PLUNGER COLOURS

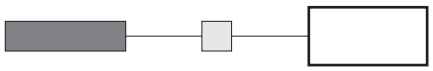

2	Black (standard)
3	Green
6	Red
7	Ivory

Switch frame supplied in black.

4700 and 4800 series

Momentary or alternate action pushbutton switches

Distinctive features and specifications

- ❑ **Butt action contacts**
- ❑ **UL, CSA and VDE (EN 61058-1) approved**

B2

ELECTRICAL SPECIFICATIONS

- Max. current/voltage rating with resistive load :
  - silver contacts (A) : 3A 250VAC - 6A 125VAC
  - copper contacts (C) : 2A 250VAC - 4A 125VAC
- Initial contact resistance : 10 mΩ max.
- Insulation resistance : 1.000 MΩ min. at 500VDC
- Dielectric strength : 2.000 Vrms 50 Hz min. between terminals
  3.000 Vrms 50 Hz min. between terminals and frame
- Electrical life : 10.000 cycles at full load

MATERIALS

- Case : melamine-phenolic
- Plunger : polyamide
- Bushing : polyamide
- Contacts : **A** : silver
  C : copper, silver plated

GENERAL SPECIFICATIONS

- Torque : 0,95 Nm (.70 Ft.lb) max. applied to nut
- Panel thickness : 5 mm (.196) max. between 2 nuts
- Total travel : 4,5 mm (.177) +/- 0,5 (.019)
- Operating temperature : -20°C to +65°C
- Hand soldering : 270°C max. for 10 seconds max. - Iron Ø 3 mm (.118)

APPROVALS

EN 61058-1

Models 4731A, 4736A, 4741A, 4746A are UL, CSA and VDE (EN 61058-1 approved.

Models 4831A, 4836A, 4841A, 4846A are VDE (EN 61058-1) approved.

Marking : to order switches marked UL/CSA, complete appropriate box of ordering format. VDE is standard marked.

Dimensions : first dimensions are in mm while inches are shown as bracketed numbers.

Sealing boots are available to protect the switches against dust and water. They are presented in section H.

Mounting accessories : standard hardware supplied with all models : 1 hex nut U166 and 1 knurled nut U520 in the same colour as the plunger. They are presented in section I.

Packaging unit : single pole models : 40 pieces - Double pole models : 20 pieces.

The company reserves the right to change specifications without notice.

4700 and 4800 series

Momentary or alternate action pushbutton switches

Solder lug/quick-connect or straight PC terminals

MODEL STRUCTURE

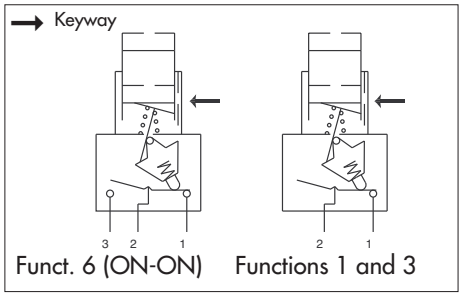

- 1 and 2 pole configurations
- Button returns in upper position after actuation.
- Panel cut-out :
  Ø 12,2 (.480)

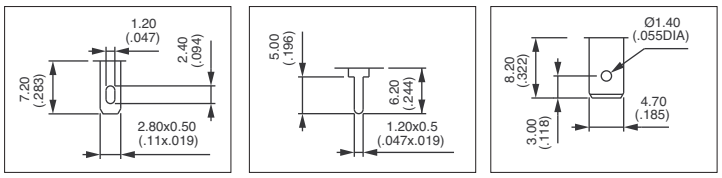

MODEL STRUCTURE

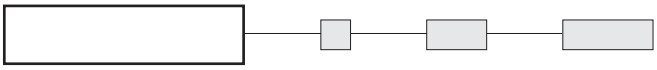

B2

Solder lug/quick-connect terminals

Single pole	Double pole			
4731	**4741**	ON	-	OFF
4736	**4746**	ON	-	ON
4733	**4743**	OFF	-	MOM

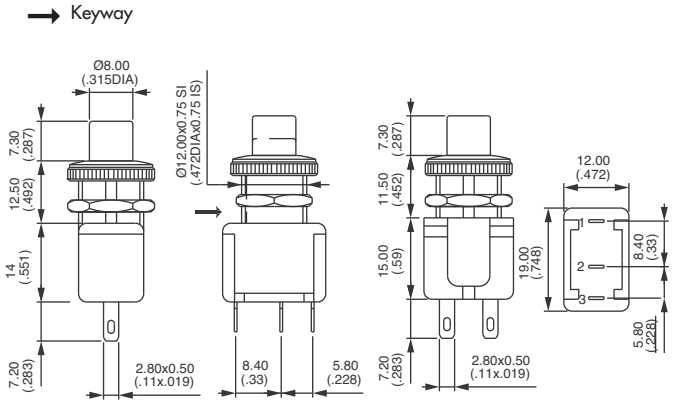

Straight PC terminals

Single pole	Double pole			
4831	**4841**	ON	-	OFF
4836	**4846**	ON	-	ON
4833	**4843**	OFF	-	MOM

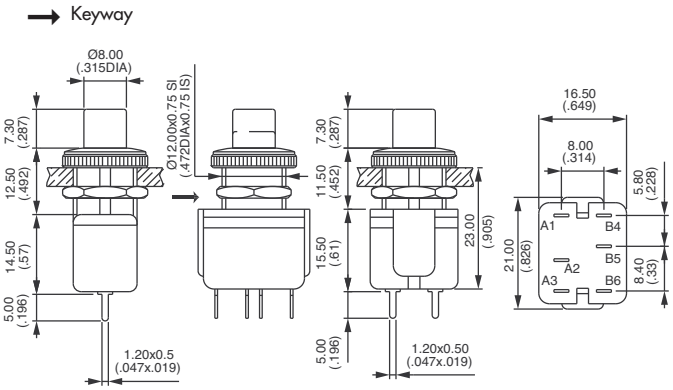

Quick-connect terminals 4,7 x 0,8 (.185 x .031)

4731/8	ON	-	OFF
4736/8	ON	-	ON
4733/8	OFF	-	MOM

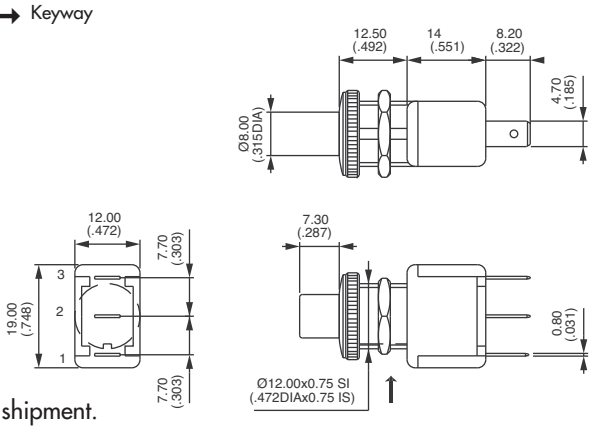

Available with silver contacts only.
Minimum order : 1 000 pieces per type in one shipment.

CONTACT MATERIALS

A	Silver
C	Copper, silver plated (not available on models with quick-connect terminals /8)

ACTUATOR COLOURS

01	Blue
02	Black
03	Green
05	Yellow
06	Red
07/1	White
09	Orange

APPROVALS

UU (UL-CSA)

Availability : see specifications for details or approved models.

Marking : to order switches marked UL-CSA, complete above box with "UU".
VDE approval is standard marked.

And your panel becomes active !

Like the CP series, CG series switches are activated by the touch of a finger. But they are designed for mounting under a non-conductive front face (glass or polycarbonate*) and are activated through the front face, transforming the inert fascia into an active interface. Low profile is an asset for this type of mounting.

- **50 million cycles**
  No moving mechanical parts to wear out.
- **Advantages of under-panel mounting**
  - Robustness
  - Sealing
  - Easy to clean flat surface
  - Easy panel marking
- **Custom disk colours and marking**
  Marking flexibility based on digital printing.

* For other non conductive materials, consult APEM.

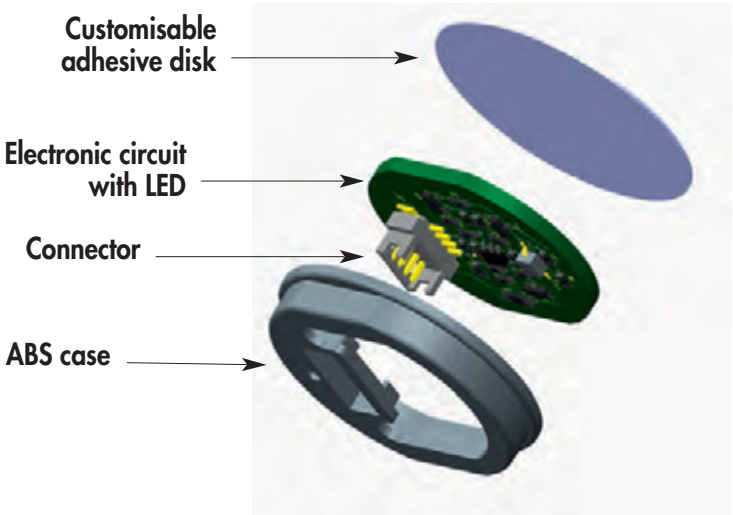

Mounting of a CG switch

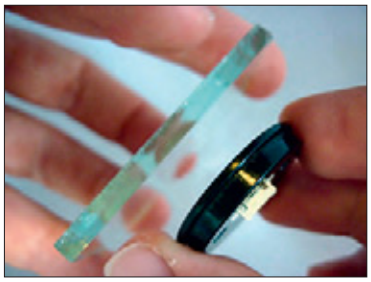

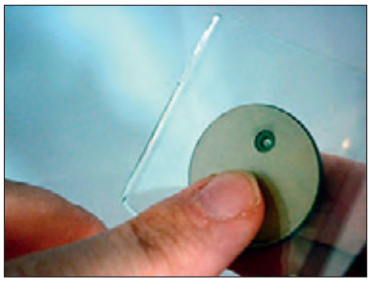

Note : the panel surface should be degreased prior to mounting.

The company reserves the right to change specifications without notice.

- **Activated by the touch of a finger**
  Even with surgeon gloves
- **50 million cycles**
- **Auto-calibration function**
  Ensures the sensor adapts to changing external environments
- **Mounting under max. 6 mm glass or 4 mm polycarbonate panels**

ENVIRONMENTAL SPECIFICATIONS

- Triggered by flowing water
- Temperature range : -40°C to +70°C
- Adhesive and connector resistant to vibrations

ELECTRICAL AND GENERAL SPECIFICATIONS

- Supply voltage : 5VDC, 12VDC or 24VDC
- Supply current : 15mA max. (12V)
- Max. current/voltage rating : 200mA 24VDC
- Life expectancy : 50 million cycles
- Switch resistance ON : 1 Ohm max.
- Power consumption : 10mA max. mode OFF
- Output type : NPN

Wiring diagrams

	Non-illuminated	Illuminated 1 LED	
		Output indicator	Independent
OFF-ON OFF - MOM	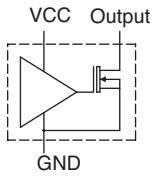	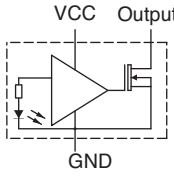	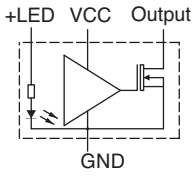

MATERIALS

- Case : ABS
- Sealing : epoxy

Wiring for mating connector Harwin M30-1100400

Pin 1 : output
Pin 2 : GND
Pin 3 : +LED
Pin 4 : +VCC

Mating harness (connector + wires) available : see «Accessories» at the end of the series.

⚠ This switch should not be used in safety applications.

CG series

Capacitive switches for underlay applications

Overview

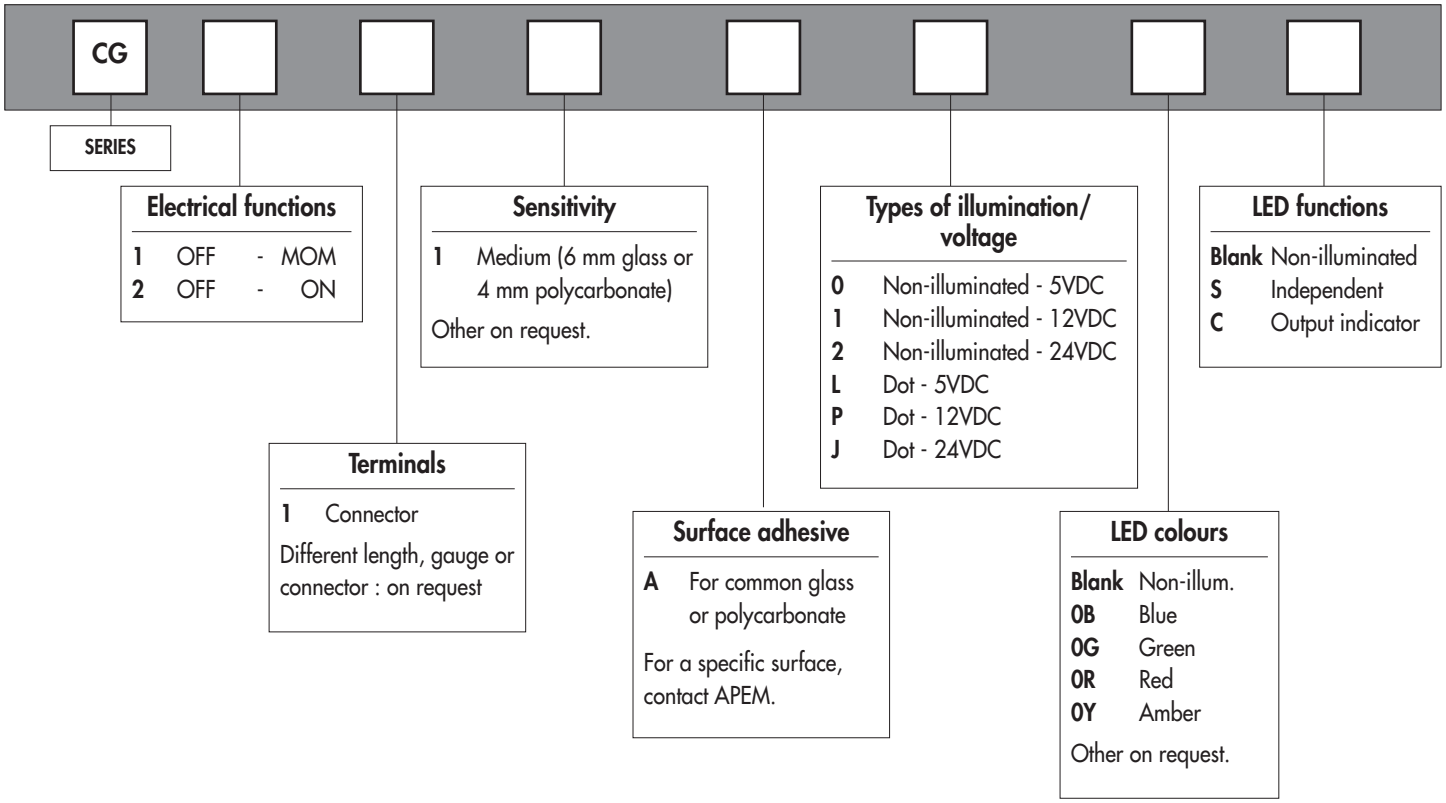

Dimensions : first dimensions are in mm while inches are shown as bracketed numbers.

NOTICE : please note that not all combinations of above numbers are available.
Refer to the following pages for further information.

Packaging unit : 20 pieces

- Momentary or latching

MODEL STRUCTURE

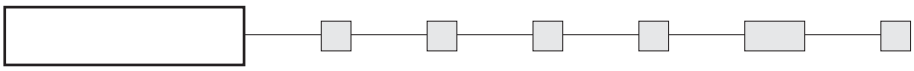

Momentary **CG1**	OFF	-	ON
Latching **CG2**	OFF	-	ON

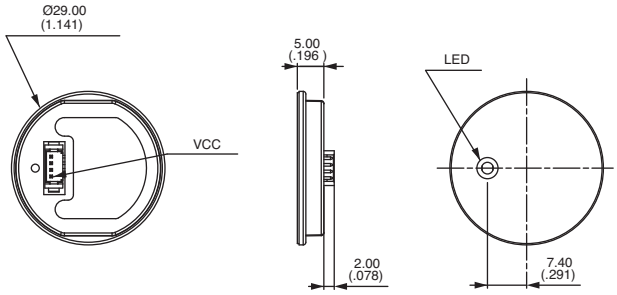

For connector wiring, see "Specifications" page.

TERMINALS

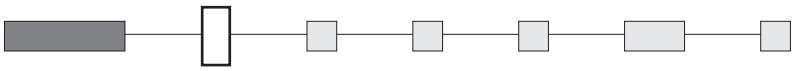

1 Connector

SENSITIVITY

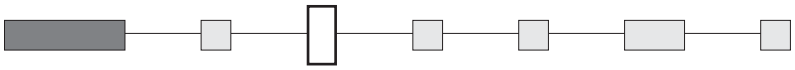

1 Medium (6 mm glass or 4 mm polycarbonate)
Other on request.

SURFACE ADHESIVE

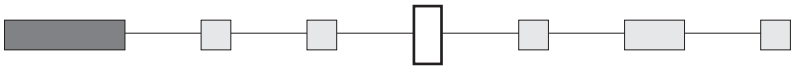

A For common glass or polycarbonate
For a specific surface, contact APEM.

TYPE OF ILLUMINATION

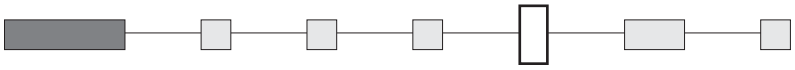

0	Non-illuminated - 5VDC
1	Non-illuminated - 12VDC
2	Non-illuminated - 24VDC
L	Dot - 5VDC
P	Dot - 12VDC
J	Dot - 24VDC

LED COLOURS

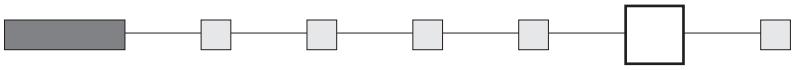

Blank	Non-illuminated
0B	Blue
0G	Green
0R	Red
0Y	Amber

Other on request.

LED FUNCTION

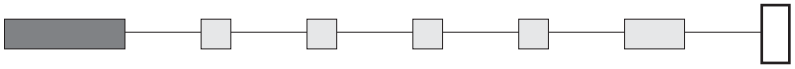

Blank	Non-illuminated
S	Independent
C	Output indicator

ACCESSORIES

Order separately.

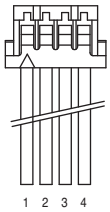

U7120

Mating harness for independent LED (version S)

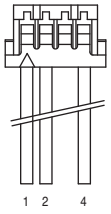

U7040

Mating harness for all other versions

Connector : Harwin M30-1100400
Wires : AWG28, 150 mm

- **Activated by the touch of a finger**
  Even with surgeon gloves
- **50 million cycles**
- **Auto-calibration function**
- **Bushing diameter 16, 19 or 22 mm**
- **Momentary or latching**

ENVIRONMENTAL SPECIFICATIONS

- Sealing : IP68 and IP69K according to IEC 60529
- Triggered by flowing water
- Impact resistance : IK10
- Operating temperature : -20°C to +65°C
- ESD : complies with EN61000-4-2 (extended) ± 8KV (20 contacts) and ± 15KV (20 air discharges)

MATERIALS

- Case : aluminium, anodized
- Multi-wire leads section 0,22 mm^2 length 300 mm
- Cable, length 300 mm, section depending on switch model
- Connector : HE14 6V compatible with AMP/TYCO281839-3

ELECTRICAL AND GENERAL SPECIFICATIONS

- Max. current/voltage rating : 200mA 24VDC
- Supply voltage : 5VDC, 12VDC or 24VDC
- Life expectancy : 50 million cycles
- Power consumption non-illuminated : 7mA
- Power consumption illuminated : 25mA
- Operating force : 0N
- LED state for output image option :
  1 LED : the LED is ON when the output is closed.
  2 LEDs : first colour is ON when the output is open. Second colour is ON when the output is closed.
- Output type : NPN

ADJUSTABLE SENSITIVITY

Connection to ground by means of the yellow wire increases sensitivity (momentary version only).

⚠ This switch should not be used in safety applications.

Wiring diagrams

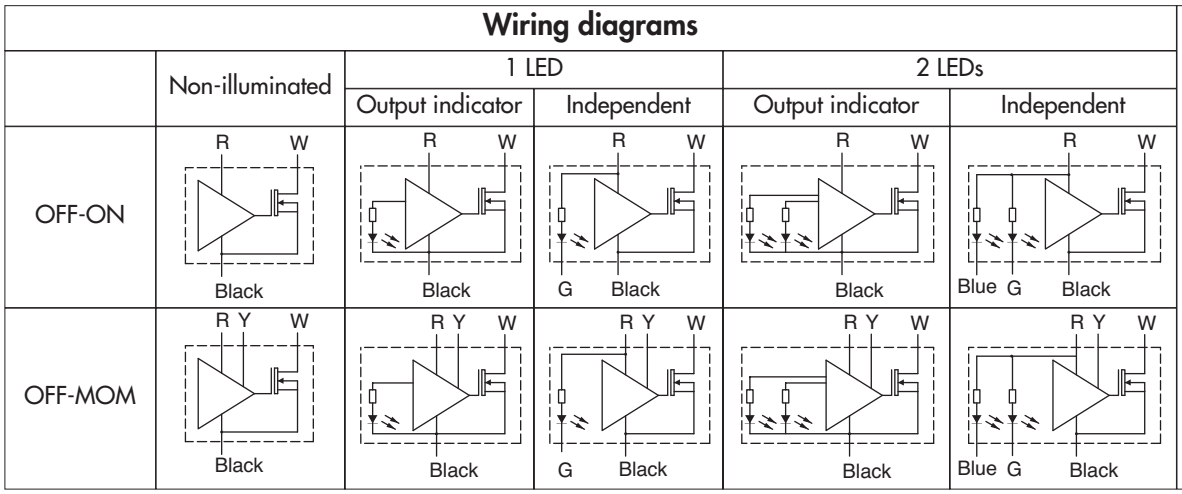

Legend

R	red	+V
Black	black	GND
W	white	output
Y	yellow	sensitivity
G	green	-LED 1
Blue	blue	-LED2

Wire colours may vary. Always refer to the label on the switch.

Wiring for switch connector

Pin 1 : GND
Pin 2 : output
Pin 3 : +V
Pin 4 : LED 2
Pin 5 : sensitivity
Pin 6 : LED 1

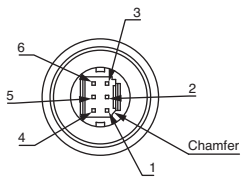

CP series

Capacitive switches

Overview

CP [ ] [ ] [ ] [ ] 000 [ ] [ ] [ ]

SERIES

Bushing diameters

B1	16 mm (.630)
B2	19 mm (.748)
B3	22 mm (.866)

Terminals

1	Flying leads
2	Cable
3	Connector

Electrical functions

1	OFF	-	MOM
2	OFF	-	ON

Colours / Materials

0	**Natural anodized**
1	Blue anodized
2	**Black anodized**
3	Green anodized
5	Gold anodized
6	Red anodized

Types of illumination/ voltage

0	Non-illuminated - 5VDC
1	Non-illuminated - 12VDC
2	Non-illuminated - 24VDC
A	Standard ring - 5VDC
N	Standard ring - 12VDC
K	Standard ring - 24VDC
C	Thin ring - 5VDC
D	Thin ring - 12VDC
E	Thin ring - 24VDC
F	Large ring - 5VDC
G	Large ring - 12VDC
H	Large ring - 24VDC

A, N, K for dia. 16 & 19 only
C, D, E, F, G, H for dia 22 only

LED colours

Blank	Non-illum.
0B	Blue *
0G	Green *
0S	Red
0Y	Amber
GS	Green/red *

* For 12VDC and 24VDC models only

LED functions

S	Independent
C	Output indicator

B2

On request

- *Duration of activation 15 minutes for latching models (standard duration is infinite)*
- *Different lengths, gauges or colours for flying lead terminals*
- *Different cable lengths*

Dimensions : first dimensions are in mm while inches are shown as bracketed numbers.

NOTICE : please note that not all combinations of above numbers are available.
Refer to the following pages for further information.

Packaging unit : 20 pieces

The company reserves the right to change specifications without notice.

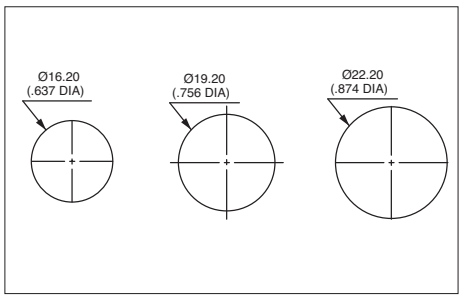

Shown with flying lead terminals

MODEL STRUCTURE

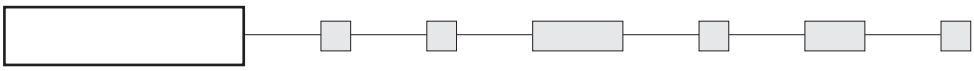

Bushing Ø 16 mm (.630) - standard ring

CPB1110000NGSC

Momentary
CPB11 OFF - MOM

Latching
CPB12 OFF - ON

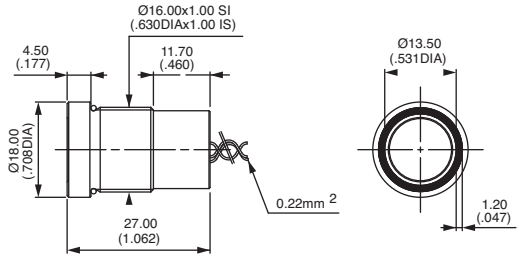

Bushing Ø 19 mm (.748) - standard ring

CPB2110000NGSC

Momentary
CPB21 OFF - MOM

Latching
CPB22 OFF - ON

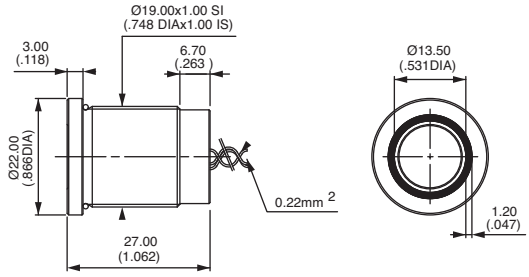

Bushing Ø 22 mm (.866) - large or thin ring

CPB3210000GGSC

Momentary
CPB31 OFF - MOM

Latching
CPB32 OFF - ON

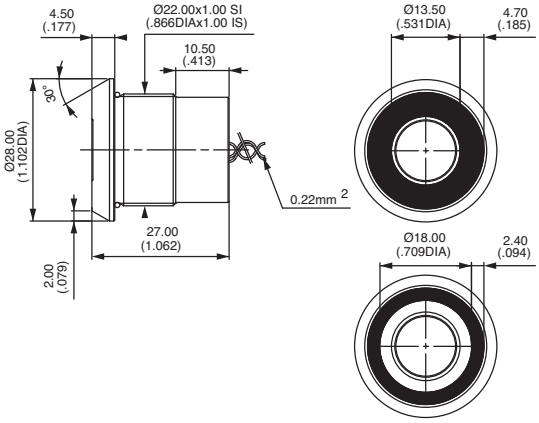

CP series

Capacitive switches

Options

TERMINALS

1 Flying leads
2 Cable
3 Connector HE14 6V (see opposite)

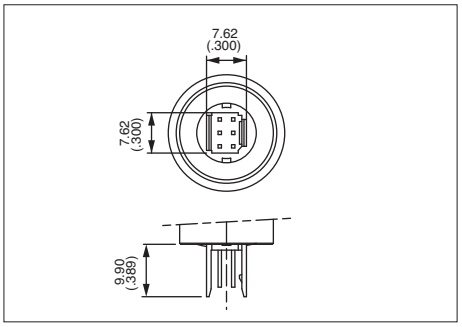

B2

CASE COLOURS / MATERIALS

Code	Colour
0	**Natural anodized aluminium**
1	Blue anodized aluminium
2	**Black anodised aluminium**

Code	Colour
3	Green anodized aluminium
5	Gold anodized aluminium
6	Red anodised aluminium

TYPES OF ILLUMINATION

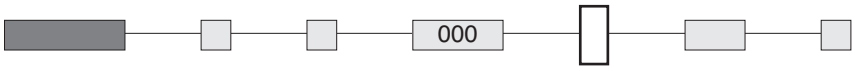

	5VDC	12VDC	24VDC
Non-illuminated	**0**	**1**	**2**
Standard ring (Ø 16 & 19 only)	**A**	**N**	**K**
Thin ring (Ø 22 only)	**C**	**D**	**E**
Large ring (Ø 22 only)	**F**	**G**	**H**

LED COLOURS

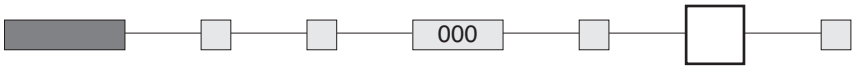

Blank Non-illuminated

0B : blue - **0G** : green - **0S** : red - **0Y** : amber - **GS** : green/red

⚠ Blue, green and green/red LEDs available on 12VDC and 24VDC models only.

LED FUNCTIONS

S Independent
C Output indicator

- ❑ **Bushing diameter 16 mm, 19 mm or 22 mm**
- ❑ **Sealed to IP68 and IP69K (switches mounted on panel)**
- ❑ **Easy to clean metal surface**
- ❑ **Very long life expectancy**
- ❑ **Ring or dot illumination**

ENVIRONMENTAL SPECIFICATIONS

- Sealing : IP68 per IEC 529, IP69K per DIN 40050-9 (switches mounted on panel)
- Vibration resistance : 10-500 Hz / 10 g per IEC 60068-2-6
- Operating temperature : -40°C to +75°C
- EMC compatibility according to EN 61058-1 for the whole range
- EMC compatibility according to EN 61000-4 & EN61000-6-2 for model 1A (code 002)

MATERIALS

- Case : aluminium, anodized or stainless steel 316L
- Multi-wire leads section 0,22 mm^2 length 300 mm, twisted by pair
- Cable, length 300 mm, section depending on switch model
- PC terminals : bronze, tin plated

ELECTRICAL AND GENERAL SPECIFICATIONS

- Max. current/voltage rating :
  - Function A : standard 200mA 24VAC/DC - option 1A 24VAC/DC
  - Function B : standard 100mA 24VAC/DC
- Switch resistance ON : 10Ω max.
- Switch resistance OFF : 5MΩ min.
- Operating force : 2 to 6N
- Life expectancy : 50 million cycles
- LED consumption : Illuminated dot 10mA - Illum. ring 20mA (functions A-B-C)
- Power consumption for function 1 : non-illum.10mA - illuminated 30mA

Note : to maintain the ESD performance, always add a ground washer when the panel is made of non-conductive material (PVC, polycarbonate).
For part numbers, see «Mounting accessories» on the following pages.

SEALING IP68

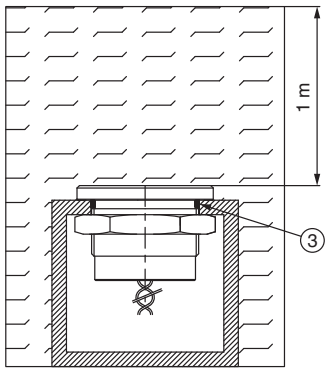

SEALING IP69K

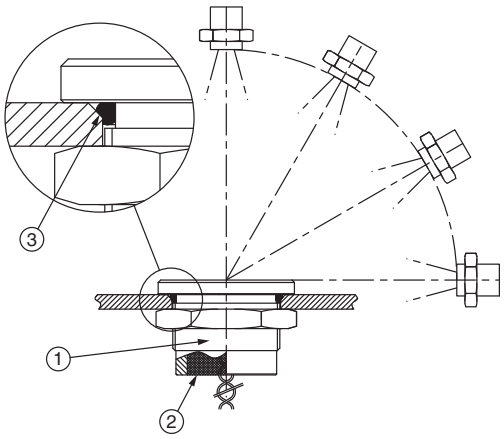

① One-piece bushing
② Epoxy sealed terminals
③ O-ring

Continuous immersion in water

IP68 test conditions

Continuous immersion in water (1m, 24 hours)

High pressure, high temperature wash down

IP69K test conditions

. Pressure : 80 - 120 bars
. Distance : 15 cm
. Temperature : 80°C ± 5°C
. Flow : 14 - 16 l/mn
. Duration : 30 seconds per position

The company reserves the right to change specifications without notice.

FINGER PRESSURE applied to switch

1 = pressure
0 = no pressure

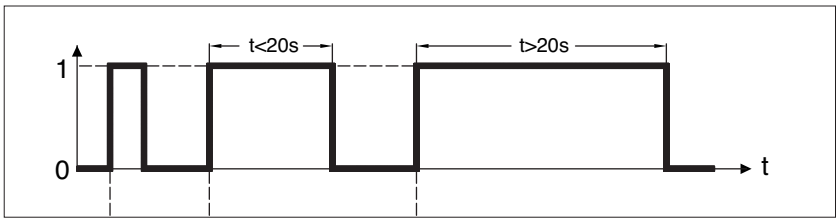

OUTPUT

- Momentary NO (pulse)
No external power supply required

- Momentary NC (pulse)
No external power supply required

- Momentary NO prolongated pulse
No external power supply required

- Latching (ON - OFF)
Requires external power supply

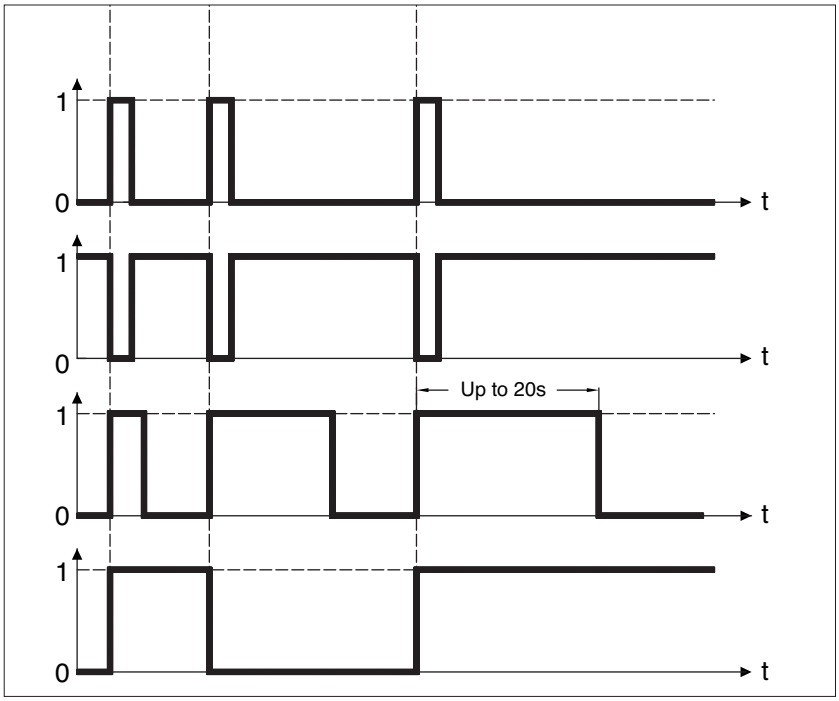

1 = closed output 0 = open output

Wiring diagrams

	Non-illuminated	1 LED *	2 LEDs	3 LEDs
Momentary NO	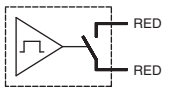	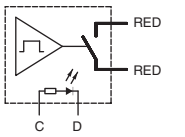	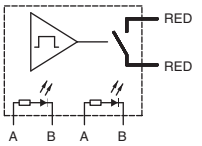	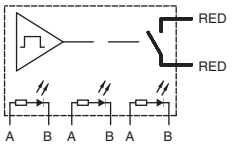
Momentary NC	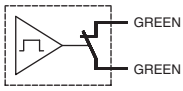	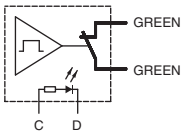	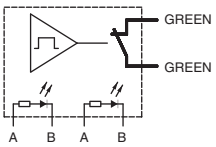	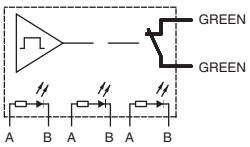
Momentary NO prolongated pulse	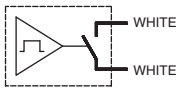	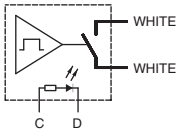	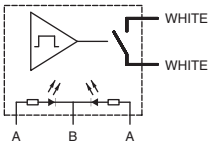	
Latching (ON - OFF)		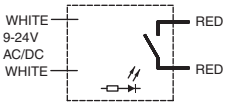		

Legend : C = yellow, D = blue, B = black, A = same colour as LED * LED colour is indicated by the bottom of the product.

PBA [ ] [ ] [ ] [ ] [ ] [ ] [ ] [ ]

SERIES

Bushing / operator

All models with Ø 16 bushing

- **R1** Flat operator, height 4,50 (.177)
- **T5** Flat operator, height 1 (.039) (non illuminated)
- **R5** Operator with finger location, height 4,50 (.177) (non-illuminated)

Terminals

- **F** Flying leads
- **C** Cable
- **P** Straight PC (T5 model, non-illuminated, functions A & B only)

Ratings

- **000** Standard
- **002** 1A 24VAC/DC (NO pulse only, function A)

Colours / Materials

- **0** **Natural anodized**
- **1** Blue anodized
- **2** **Black anodized**
- **3** Green anodized
- **5** Gold anodized
- **6** Red anodized
- **B** **Stainless steel 316L**

Type of illumination/ voltage

- **Blank** Non-illuminated
- **A** Standard ring - 5VDC
- **N** Standard ring - 12VDC
- **K** Standard ring - 24VDC
- **W** Standard ring, microcontroller driven

LED colours

- **Blank** Non-illum.
- **0B** Blue
- **0G** Green
- **0S** Red
- **0Y** Yellow
- **0W** White
- **2A** Red/green
- **2B** Red/yellow
- **2C** Red/blue
- **2D** Red/white
- **2E** Green/blue
- **2F** Green/yellow
- **2G** Green/white
- **2H** Blue/yellow
- **2I** Blue/white
- **2K** Yellow/white

Electrical function

- **A** NO (pulse)
- **B** NC (pulse)
- **C** NO prolongated pulse (ground connector compulsory)
- **1** ON - OFF (requires external power supply - cannot be combined with T5 operator - illumination type W only)

LED colours (continued)

- **3A** Red/green/blue
- **3B** Red/green/yellow
- **3D** Red/green/white
- **3E** Red/blue/yellow
- **3F** Red/blue/white
- **3G** Red/yellow/white
- **3H** Green/blue/yellow
- **3I** Green/blue/white
- **3J** Green/yellow/white
- **3K** Blue/yellow/white

For options not listed above, please contact APEM.

Dimensions : first dimensions are in mm while inches are shown as bracketed numbers.

NOTICE : please note that not all combinations of above numbers are available.
Refer to the following pages for further information.

Mounting accessories : standard hardware supplied :1 hex nut 10-621 (19 mm ac. flats) and 1 O-ring.
Always add a ground washer U5735 when the panel is non-conductive (PVC, polycarbonate).

Packaging unit : 20 pieces (flying lead terminals) or 25 pieces (cable terminals)

PBA series

Piezo switches Ø 16 (.630)

Illuminated or non-illuminated

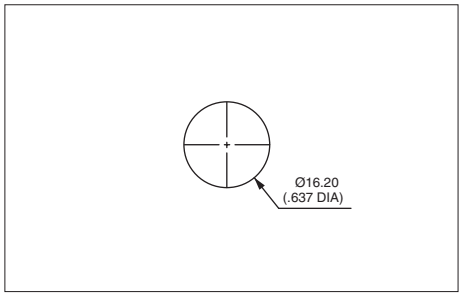

- Operator Ø 18 mm (.708)

Shown with flying lead terminals.

MODEL STRUCTURE

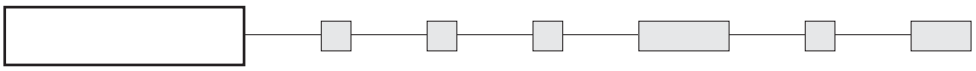

B2

Non-illuminated, operator height 4,50 mm (.177)

PBAR1AF2000

Flat
PBAR1

With finger location
PBAR5

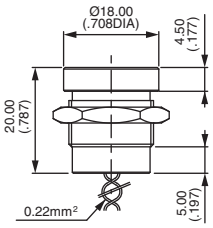

R1

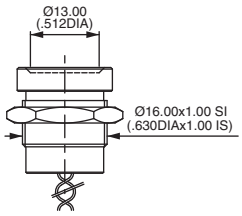

R5

Non-illuminated, operator height 1 mm (.039)

PBAT5AF0000

Flat
PBAT5

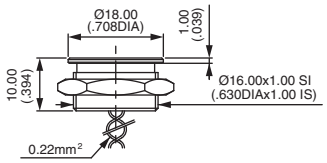

With standard illuminated ring

PBAR1AF000A0B

Flat operator, height 4,50 (.177)
PBAR1

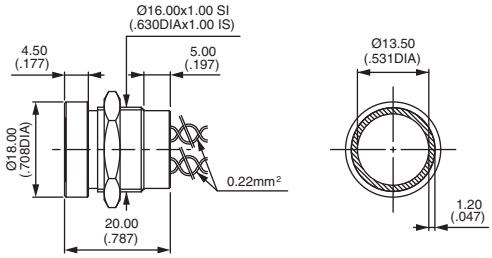

Wire colours : see "Electrical functions"

ELECTRICAL FUNCTION

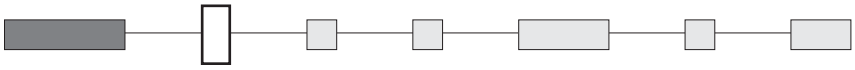

A NO pulse
B NC pulse
C NO prolongated pulse - Ground connector U5735 compulsory, supplied with the switch.
1 ON - OFF - Requires external power supply - Cannot be combined with T5 operator.
Illumination type W only.

TERMINALS

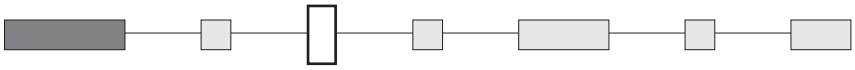

F Flying leads
C Cable
P Straight PC (T5 model, non-illuminated, functions A and B only)

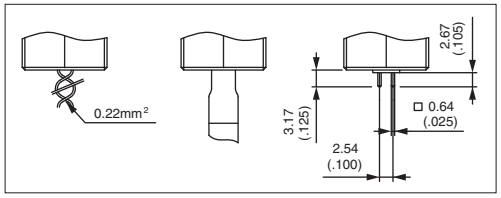

CASE COLOURS / MATERIALS

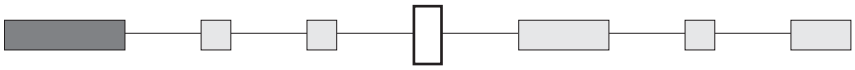

Code	Colour
0	**Natural anodized aluminium**
1	Blue anodized aluminium
2	**Black anodised aluminium**

Code	Colour
3	Green anodized aluminium
5	Gold anodized aluminium
6	Red anodised aluminium

Code	Colour
B	**Stainless steel 316L**

0 **1** **2** **3** **5** **6** **B**

RATINGS

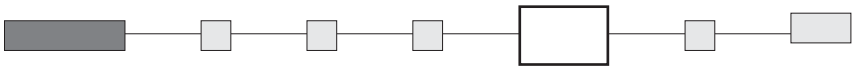

000 Standard
002 1A 24VAC or DC (NO pulse only, function A)

PBA series

Piezo switches Ø 16 (.630)

Options

TYPE OF ILLUMINATION / VOLTAGE

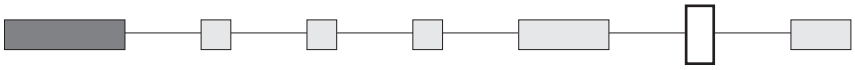

Blank : non-illuminated

	5VDC	12VDC	24VDC	Microcontroller driven
○	**A**	**N**	**K**	**W**

B2

LED COLOURS

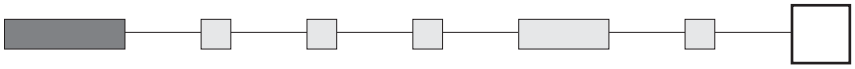

Integrated LED resistor

Blank : non-illuminated

0B **0G** **0S** **0Y** **0W**

Illuminated 1 LED *
0B : blue - **0G** : green - **0S** : red - **0Y** : yellow - **0W** : white

Illuminated 2 LEDs
2A : red/green - **2B** : red/yellow - **2C** : red/blue - **2D** : red/white - **2E** : green/blue - **2F** : green/yellow - **2G** : green/white
2H : blue/yellow - **2I** : blue/white - **2K** : yellow/white

Illuminated 3 LEDs
3A : red/green/blue - **3B** : red/green/yellow - **3D** : red/green/white - **3E** : red/blue/yellow - **3F** : red/blue/white
3G: red/yellow/white - **3H** : green/blue/yellow - **3I** : green/blue/white - **3J** : green/yellow/white - **3K** : blue/yellow/white

* LED colour is indicated by the bottom of the product.

PBA [ ] [ ] [ ] [ ] [ ] [ ] [ ]

SERIES

Bushing / operator

R9	Bushing Ø 19 (.748), flat operator, height 3 (.118)
RA	Bushing Ø 19 (.748), with chamfer, height 3 (.118)

Terminals

F	Flying leads
C	Cable

Ratings

000	Standard
002	1A 24VAC / DC (NO pulse only, function A)

LED colours

Blank	Non-illum.
0B	Blue
0G	Green
0S	Red
0Y	Yellow
0W	White
2A	Red/green
2B	Red/yellow
2C	Red/blue
2D	Red/white
2E	Green/blue
2F	Green/yellow
2G	Green/white
2H	Blue/yellow
2I	Blue/white
2K	Yellow/white

Colours / Materials

0	**Natural anodized**
1	Blue anodized
2	**Black anodized**
3	Green anodized
5	Gold anodized
6	Red anodized
B	**Stainless steel 316L**

Type of illumination/voltage

Blank	Non-illuminated
A	Standard ring - 5VDC
N	Standard ring - 12VDC
K	Standard ring - 24VDC
W	Standard ring, microcontroller driven

Electrical function

A	NO (pulse)
B	NC (pulse)
C	NO prolongated pulse (ground connector compulsory)
1	ON - OFF (requires external power supply, illumination type W only)

LED colours (continued)

3A	Red/green/blue
3B	Red/green/yellow
3D	Red/green/white
3E	Red/blue/yellow
3F	Red/blue/white
3G	Red/yellow/white
3H	Green/blue/yellow
3I	Green/blue/white
3J	Green/yellow/white
3K	Blue/yellow/white

For options not listed above, please contact APEM.

Dimensions : first dimensions are in mm while inches are shown as bracketted numbers.

NOTICE : please note that not all combinations of above numbers are available.
Refer to the following pages for further information.

Mounting accessories : standard hardware supplied :1 hex nut 10-855-0 (22 mm ac. flats) and 1 O-ring
Always add a ground washer U5736 when the panel is non-conductive (PVC, polycarbonate).

Packaging unit : 20 pieces (flying lead terminals) or 25 pieces (cable terminals)

PBA series

Piezo switches Ø 19 (.748)

Illuminated or non-illuminated

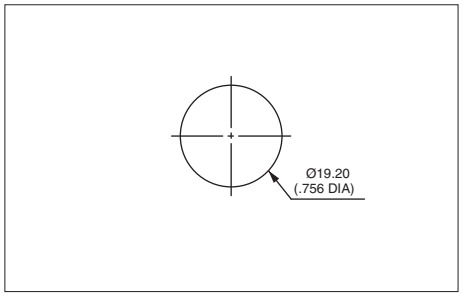

- Operator Ø 22 mm (.866)

Shown with flying lead terminals.

B2

MODEL STRUCTURE

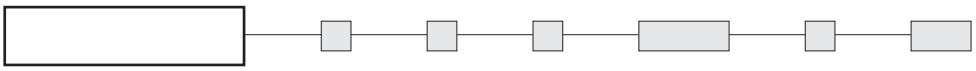

Non-illuminated - operator height 3 mm (.118)

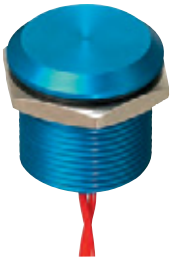

PBARAAF1000

Flat
PBAR9

With chamfer
PBARA

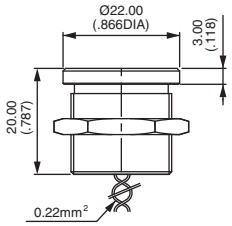

R9

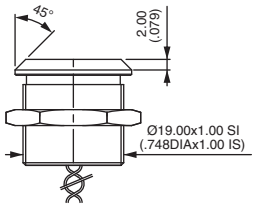

RA

With standard illuminated ring - operator height 3 mm

PBAR9AF0000A0S

Flat
PBAR9

With chamfer
PBARA

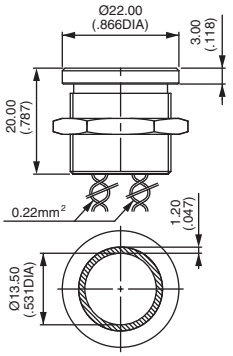

R9

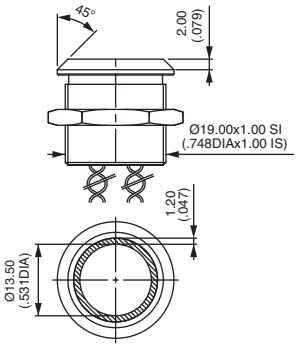

RA

Wire colours : see "Electrical functions".

ELECTRICAL FUNCTIONS

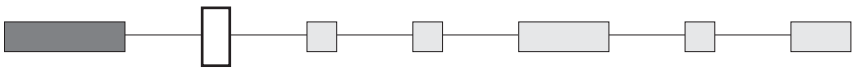

A	NO pulse
B	NC pulse
C	NO prolongated pulse - Ground connector U5736 compulsory, supplied with the switch.
1	ON - OFF - Requires external power supply - Illumination type W only.

TERMINALS

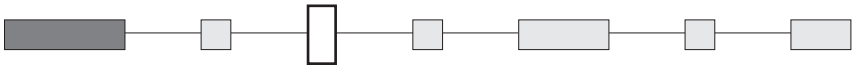

F Flying leads
C Cable

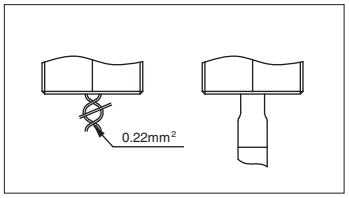

CASE COLOURS / MATERIALS

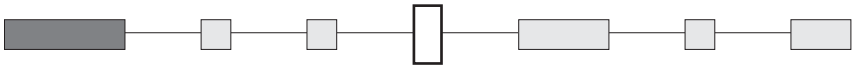

Code	Colour
0	**Natural anodized aluminium**
1	Blue anodized aluminium
2	**Black anodised aluminium**

Code	Colour
3	Green anodized aluminium
5	Gold anodized aluminium
6	Red anodised aluminium

Code	Colour
B	**Stainless steel 316L**

0 **1** **2** **3** **5** **6** **B**

RATINGS

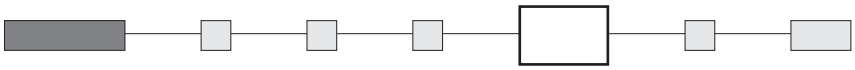

000 Standard
002 1A 24VAC or DC (NO pulse only, function A)

TYPE OF ILLUMINATION / VOLTAGE

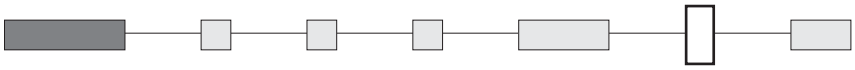

	5VDC	12VDC	24VDC	Microcontroller driven
○	**A**	**N**	**K**	**W**

PBA series

Piezo switches Ø 19 (.748)

Options

LED COLOURS

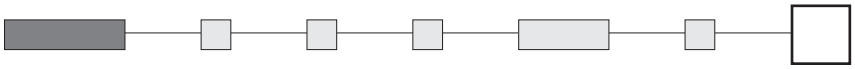

Integrated LED resistor

Blank : non-illuminated

0B **0G** **0S** **0Y** **0W**

Illuminated 1 LED *
0B : blue - **0G** : green - **0S** : red - **0Y** : yellow - **0W** : white

Illuminated 2 LEDs
2A : red/green - **2B** : red/yellow - **2C** : red/blue - **2D** : red/white - **2E** : green/blue - **2F** : green/yellow - **2G** : green/white
2H : blue/yellow - **2I** : blue/white - **2K** : yellow/white

Illuminated 3 LEDs
3A : red/green/blue - **3B** : red/green/yellow - **3D** : red/green/white - **3E** : red/blue/yellow - **3F** : red/blue/white
3G: red/yellow/white - **3H** : green/blue/yellow - **3I** : green/blue/white - **3J** : green/yellow/white - **3K** : blue/yellow/white

* LED colour is indicated by the bottom of the product.

PBA [ ] [ ] [ ] [ ] [ ] [ ] [ ]

SERIES

Bushing / operator

All models with Ø 22 bushing

- **R2** Flat, operator height 3 mm (.118) *Not available w. illuminated ring.*
- **R6** With finger location, operator height 3 mm (.118). *Not available with illuminated ring.*
- **RY** With chamfer, operator height 4,5 mm (.177). *Available with thin or large illuminated ring only.*
- **RZ** Flat, operator height 4,5 mm (.177). *Available with thin or large illuminated ring only.*

Terminals

- **F** Flying leads
- **C** Cable
- **Z** Solder lug/quick-connect (non-illum. functions A & B only) On request.

Ratings

- **000** Standard
- **002** 1A 24VAC/DC (NO pulse only, function A)

LED colours

Blank	Non-illum.
0B	Blue
0G	Green
0S	Red
0Y	Yellow
0W	White
SG	Red/green (dot only)
2A	Red/green
2B	Red/yellow
2C	Red/blue
2D	Red/white
2E	Green/blue
2F	Green/yellow
2G	Green/white
2H	Blue/yellow
2I	Blue/white
2K	Yellow/white

Colours / Materials

0	**Natural anodized**
1	Blue anodized
2	**Black anodized**
3	Green anodized
5	Gold anodized
6	Red anodized
B	**Stainless steel 316L**

Type of illumination/voltage

Blank	Non-illuminated
C	thin ring - 5VDC
D	thin ring - 12VDC
E	thin ring - 24VDC
F	large ring - 5VDC
G	large ring - 12VDC
H	large ring - 24VDC
L *	dot - 5VDC
P *	dot - 12VDC
J *	dot - 24VDC
V *	dot - µcontroller driven
Y	thin ring - µcontroller driven
Z	large ring - µcontroller driven

* Dot illumination only available with LED colours 0B, 0G, 0S, 0Y, 0W and SG.

Electrical function

A	NO (pulse)
B	NC (pulse)
C	NO prolongated pulse (illuminated ring only - ground connector compulsory)
1	ON - OFF (requires external power supply - Illumination types V, Y and Z only - only one LED colour)

LED colours (continued)

3A	Red/green/blue
3B	Red/green/yellow
3D	Red/green/white
3E	Red/blue/yellow
3F	Red/blue/white
3G	Red/yellow/white
3H	Green/blue/yellow
3I	Green/blue/white
3J	Green/yellow/white
3K	Blue/yellow/white

For options not listed above, please contact APEM.

NOTICE : please note that not all combinations of above numbers are available.
Refer to the following pages for further information.

Mounting accessories : standard hardware supplied :1 hex nut 10-856-0 (25 mm ac. flats) and 1 O-ring
Always add a ground washer U5737 when the panel is non-conductive (PVC, polycarbonate).

Packaging unit : 20 pieces (flying lead terminals) or 25 pieces (cable terminals)

PBA series

Piezo switches Ø 22 (.866)

Illuminated or non-illuminated

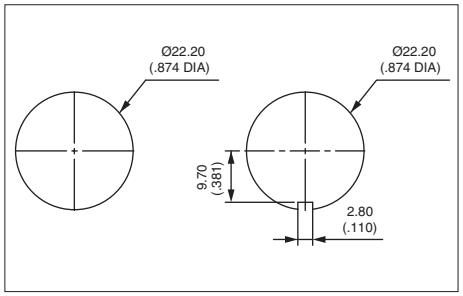

- Operator Ø 28 mm (1.102)

MODEL STRUCTURE

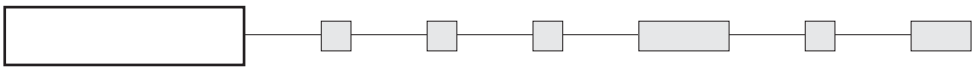

Wire colours : see "Electrical functions".

B2

Non-illuminated - operator height 3 mm (.118)

PBAR2AF6000

Flat
PBAR2

With finger location
PBAR6

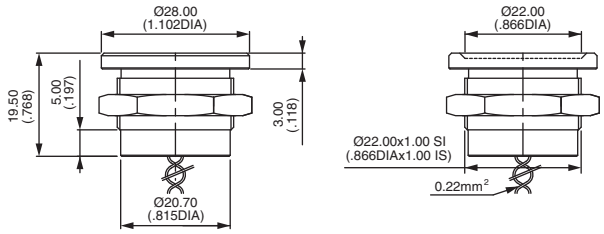

R2 R6

With illuminated dot - operator height 3 mm (.118)

PBAR6AF6000L0G

Flat
PBAR2

With finger location
PBAR6

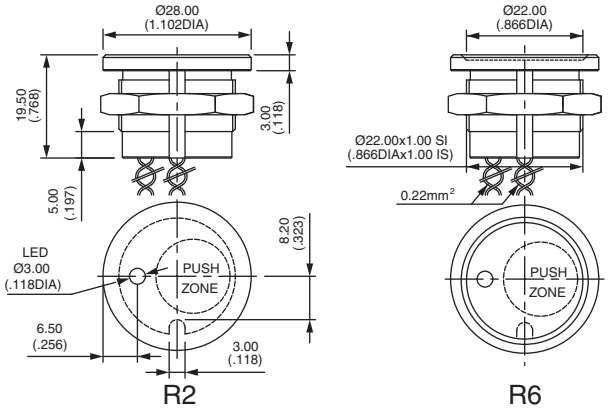

R2 R6

With thin illuminated ring - operator height 4,50 (.177)

PBARYAF0000C0B

Flat
PBARZ

With chamfer
PBARY

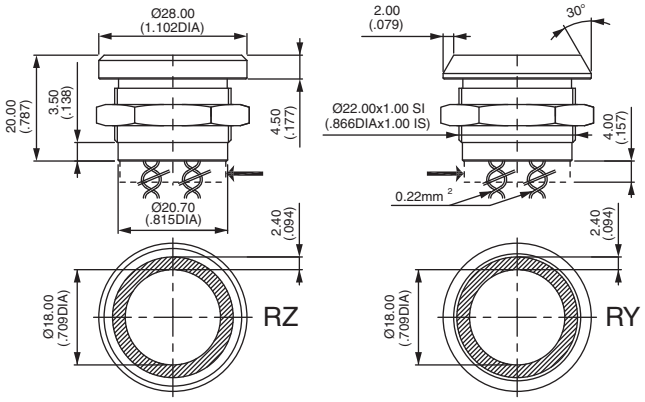

RZ RY

→ Dimension of ON-OFF models

With large illuminated ring - operator height 4,50 (.177)

PBARYAF0000F0B

Flat
PBARZ

With chamfer
PBARY

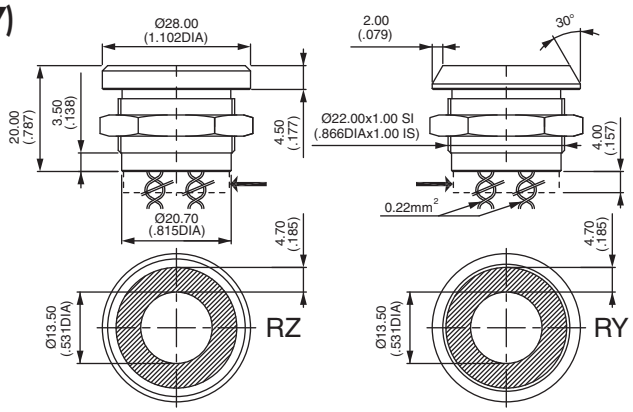

→ Dimension of ON-OFF models

B2

ELECTRICAL FUNCTIONS

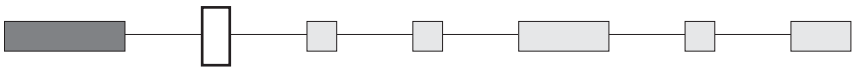

A	NO pulse
B	NC pulse
C	NO prolongated pulse (illuminated ring only) - Ground connector U5737 compulsory, supplied w. the switch.
1	ON - OFF - Requires external power supply - Illumination types V, Y and Z only - one LED colour only.

TERMINALS

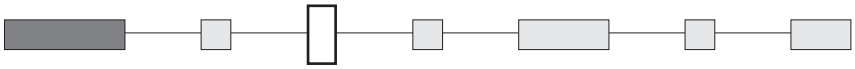

F	Flying leads
C	Cable
Z	Solder lug / quick-connect (non-illuminated, functions A and B only) On request.

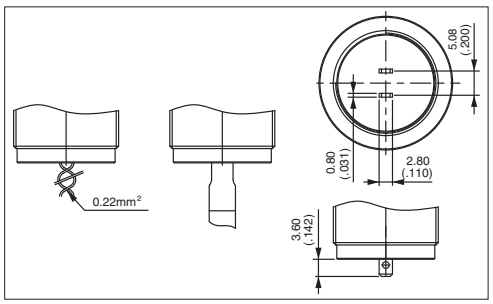

CASE COLOURS / MATERIALS

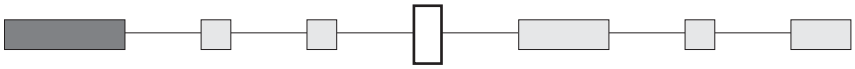

Code	Colour
0	**Natural anodized aluminium**
1	Blue anodized aluminium
2	**Black anodised aluminium**

Code	Colour
3	Green anodized aluminium
5	Gold anodized aluminium
6	Red anodised aluminium

Code	Colour
B	**Stainless steel 316L**

0 **1** **2** **3** **5** **6** **B**

PBA series

Piezo switches Ø 22 (.866)

Options

RATINGS

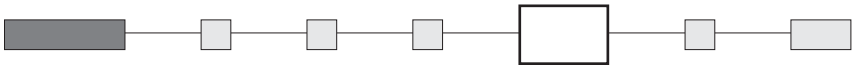

000 Standard
002 1A 24VAC or DC (NO pulse only, function A)

TYPE OF ILLUMINATION / VOLTAGE

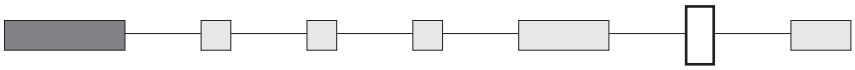

	5V	12V	24V	Microcontroller driven
○	C	D	E	Y
◎	F	G	H	Z
•	L	P	J	V

⚠ Dot illumination only available with LED colours 0B, 0G, 0S, 0Y, 0W and SG.

LED COLOURS

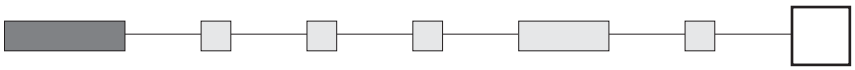

Integrated LED resistor

Blank : non-illuminated

0B **0G** **0S** **0Y** **0W**

Illuminated 1 LED *
0B : blue - **0G** : green - **0S** : red - **0Y** : yellow - **0W** : white
SG : red/green (reversed polarity LED - for dot illumination only)

Illuminated 2 LEDs
2A : red/green - **2B** : red/yellow - **2C** : red/blue - **2D** : red/white - **2E** : green/blue - **2F** : green/yellow - **2G** : green/white
2H : blue/yellow - **2I** : blue/white - **2K** : yellow/white

Illuminated 3 LEDs
3A : red/green/blue - **3B** : red/green/yellow - **3D** : red/green/white - **3E** : red/blue/yellow - **3F** : red/blue/white
3G: red/yellow/white - **3H** : green/blue/yellow - **3I** : green/blue/white - **3J** : green/yellow/white - **3K** : blue/yellow/white

* LED colour is indicated by the bottom of the product.

PBA series

ATEX approved piezo switches

Distinctive features - Specifications - Overview

- ❑ **Approved according to the ATEX 94/9/CE directive**
- ❑ **Sealed to IP66 (mounted on panel)**
- ❑ **Easy to clean metal surface**
- ❑ **Long life**
- ❑ **Illuminated models**

B2

ELECTRICAL SPECIFICATIONS

- Rated voltage : 5V to 24 VAC/DC max.
- Rated current : 200mA max. at 6VAC/DC
  50mA max. at 24VAC/DC
  (power limited to 1,2W for user group II)
- Contact resistance (ON) : 10Ω max.
- Insulation resistance (OFF) : 5MΩ min.
- Make impulse time : depending on actuating force and speed
- LED : 5VDC, 10mA to 20mA depending on model

GENERAL SPECIFICATIONS

- Operating force : 2 to 6N
- Torque : 2,5 Nm max.
- Life expectancy : 50 million cycles
- Operating temperature : -40°C to +55°C
- EMC compatibility according to EN 61058-1
- In accordance with EN 60079-0, EN 60079-11, EN 61241-0, EN 61241-11, EN 60079-26 and EN 50303
- Sealing : IP66 per IEC 60529 (switches mounted on panel)

MATERIALS

- Case : 316L stainless steel
- Terminals : multi-wire leads
  0,22 mm², length 300 mm (11.81)

Standard hardware supplied: 1 hex nut 10-621 (19 mm ac. flats), 10-855-0 (22 mm ac. flats) or 10-856-0 (25 mm ac. flats), 1 O-Ring and 1 ground connector U5735, U5736 or U5737.

Packaging units : 20 pieces

Instructions for use :
see instruction notice NTPBA007.

PBA	•	A	F	·	000	•	••	X

SERIES

Models

R1	Bushing Ø 16, flat
R2	Bushing Ø 22, flat
R9	Bushing Ø 19, flat
R5	Bushing Ø 16,with finger location (non-illuminated only)
R6	Bushing Ø 22, with finger location

R2 and R6 not available with illuminated ring.

Electrical function

A	NO (pulse)

Terminals

F	Flying leads

Colours/materials

B	316L stainless steel

Ratings

000	200mA max. at 6VAC/DC - 50mA max. at 24VAC/DC

Type

M	One-piece bushing (non-illuminated)
A	Illuminated ring (Ø 16 and 19 mm)
L	Illuminated dot (Ø 22 mm)

LED colours

0B	Blue
0G	Green
0S	Red
0Y	Yellow

Approval

X	ATEX

PBA series

ATEX approved piezo switches

Illuminated or non-illuminated

- **Highest classifications**
- **Universal**

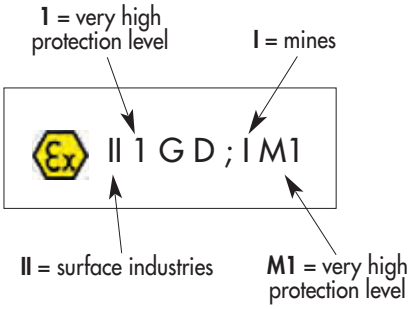

Usage : mines full of fire damp and potentially explosive atmospheres of groups IIC,IIB et IIA in T4 temperature class and/or in the presence of combustible dust (T135°C).

B2

Dia. 16 (.630) bushing - illuminated ring

Stainless steel 316L, blue LED
PBAR1AFB000A0BX

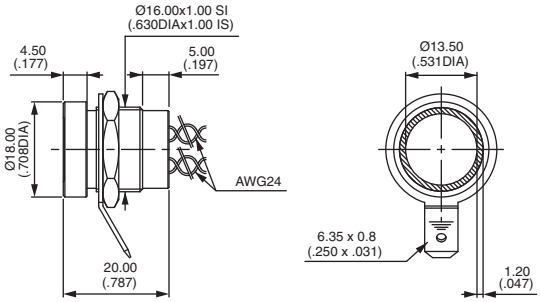

Dia. 19 (.748) bushing - illuminated ring

Stainless steel 316L, blue LED
PBAR9AFB000A0BX

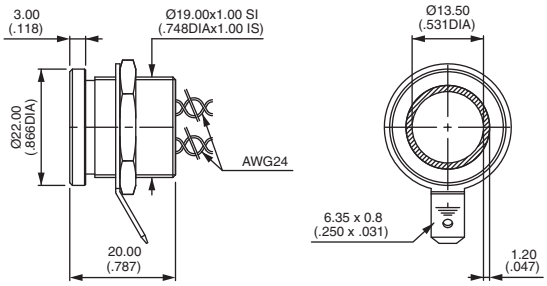

Dia. 22 (866) bushing - non-illuminated

Stainless steel 316L
PBAR2AFB000MX

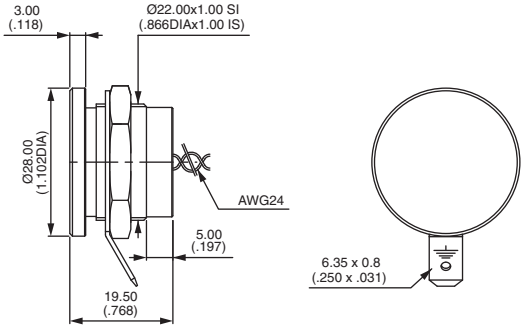

FP series

Fully illuminated pushbutton switches - bushing Ø 24 mm - momentary or latching

Distinctive features and specifications

- ❑ **Full actuator or symbol illumination**
- ❑ **Suited for integrated designs**
- ❑ **Large but lightweight**
- ❑ **Sealed to IP69K**
- ❑ **Pad printed or laser etched symbols**

	Pad printing	Laser
Non-illuminated		
Illuminated		

ELECTRICAL SPECIFICATIONS

- Max. current/voltage rating with resistive load :
  - silver contacts (code 2) : 4A 12VDC
  - gold plated contacts (code 4) : 200mA 12VDC
- Initial contact resistance : 50 mΩ max.
- Insulation resistance : 1 GΩ min. at 500VDC
- Dielectric strength : 1.000 Vrms 50 Hz min.
- Electrical life at full load :
  - Momentary models : 1 million cycles (gold plated contacts) 400.000 cycles (silver contacts)
  - Latching models : 200.000 cycles

GENERAL SPECIFICATIONS

- Sealing : IP69K according to DIN 40050-9
- Panel thickness : 1(.039) to 18 mm (.708) max.
- Total travel : 2,5 mm ± 0,5 mm
- Typical operating force : 8N ± 2N
- Low level or mechanical life :
  - Momentary models : 1 million cycles
  - Latching models : 200.000 cycles
- Torque : 3 Nm max. applied to nut
- Operating temperature : -40°C to +75°C

MATERIALS

- Case : PA46
- Actuator : PA12
- Bushing/ bezel : PA66
- Contacts : silver (code 2) or silver, gold plated (code 4)
- Cable : length 300 mm, section depending on switch model
- Terminal seal : epoxy or overmolding

WIRING DIAGRAM

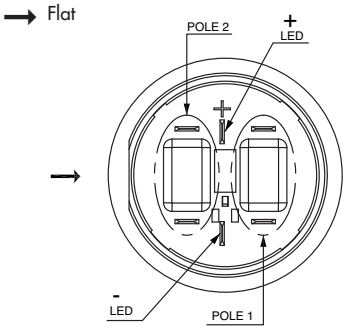

B2

The company reserves the right to change specifications without notice.

FP series

Fully illuminated pushbutton switches - bushing Ø 24 mm - momentary or latching

Overview

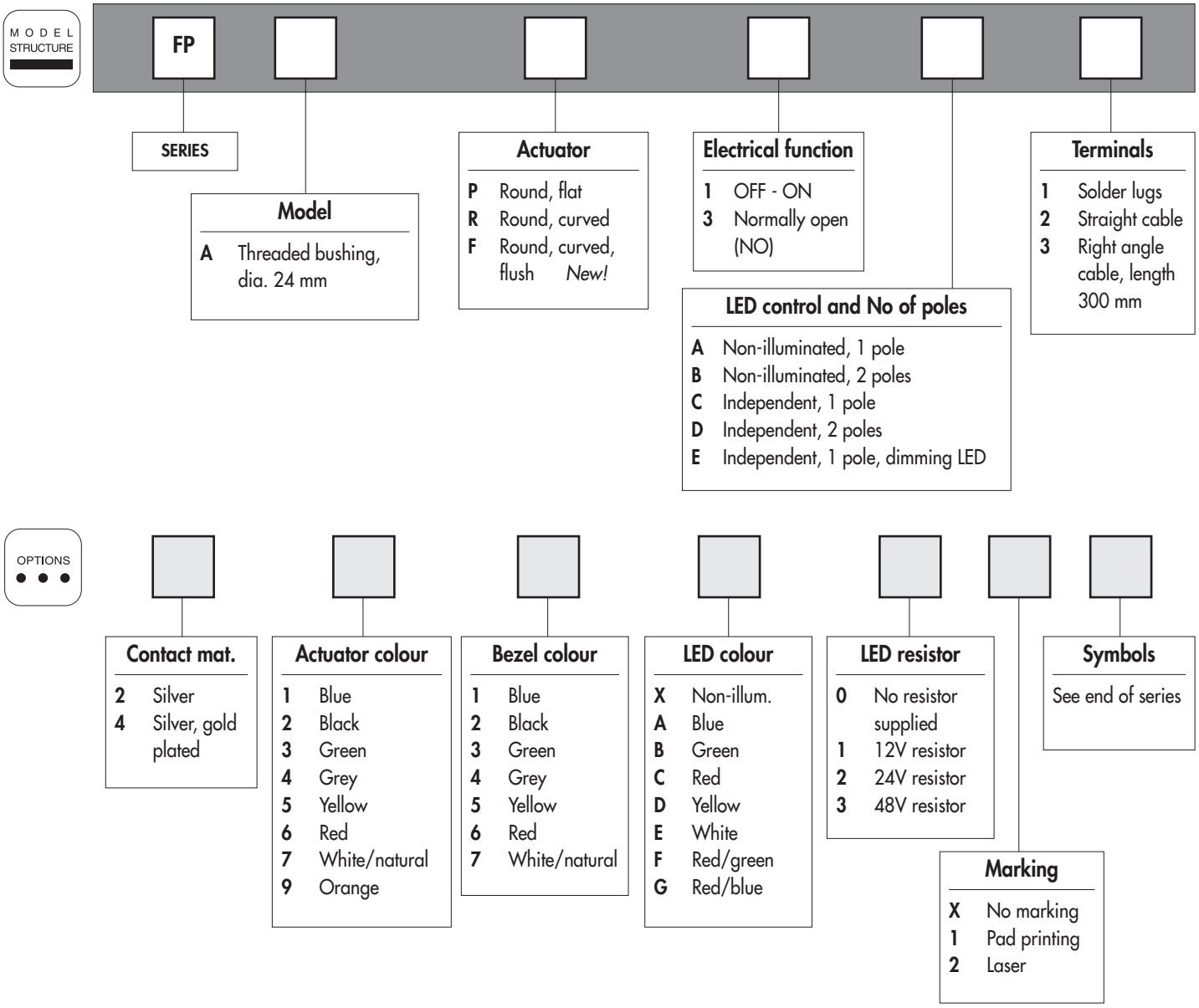

ABOUT THIS SERIES
On the following pages, you will find successively :
model structure of switches and options in the same order as in above chart

Dimensions : first dimensions are in mm while inches are shown as bracketed numbers.

NOTICE : please note that not all combinations of above numbers are available.
Refer to the following pages for further information.

Mounting accessories : Standard hardware supplied : 1 hex nut and 1 O-Ring

Packaging unit : solder lug versions : 20 pieces - cable versions : 1 piece

FP series

Fully illuminated pushbutton switches - bushing Ø 24 mm - momentary or latching

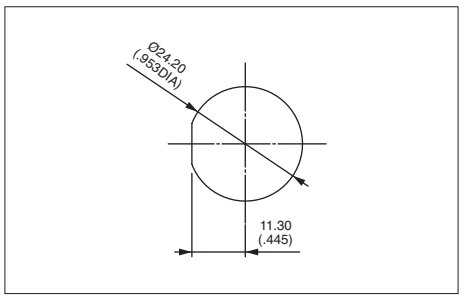

- Three terminal types
- Curved or flat actuator

To order a product, replace • with one of the codes selected under "LED control and number of poles" on next page, then add the desired options.

MODEL STRUCTURE

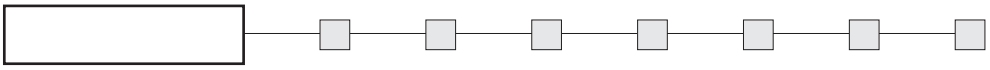

Solder lug terminals

LATCHING
Curved actuator
FPAR1•1 OFF - ON
Flat actuator
FPAP1•1 OFF ON

MOMENTARY (NO)
Curved actuator
FPAR3•1
Flat actuator
FPAP3•1

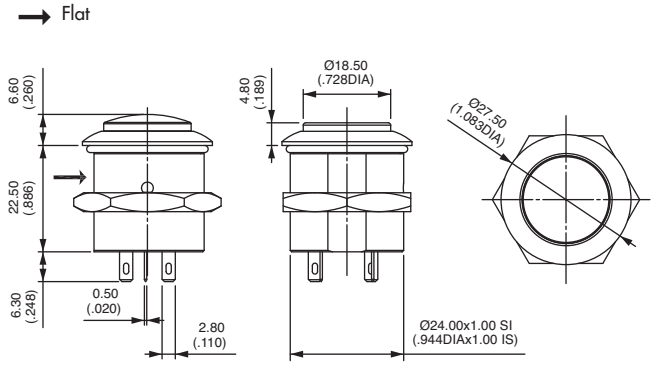

Straight cable terminals

LATCHING
Curved actuator
FPAR1•2 OFF - ON
Flat actuator
FPAP1•2 OFF ON

MOMENTARY (NO)
Curved actuator
FPAR3•2
Flat actuator
FPAP3•2

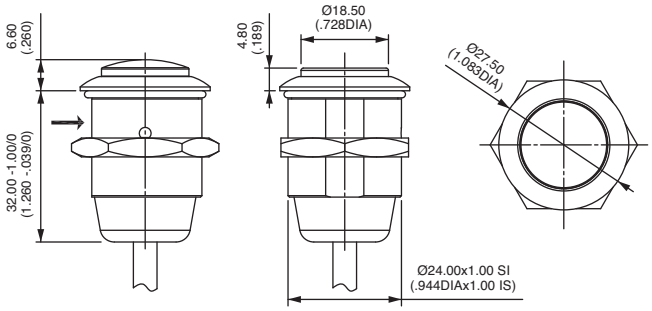

Right angle cable terminals

LATCHING
Curved actuator
FPAR1•3 OFF - ON
Flat actuator
FPAP1•3 OFF ON

MOMENTARY (NO)
Curved actuator
FPAR3•3
Flat actuator
FPAP3•3

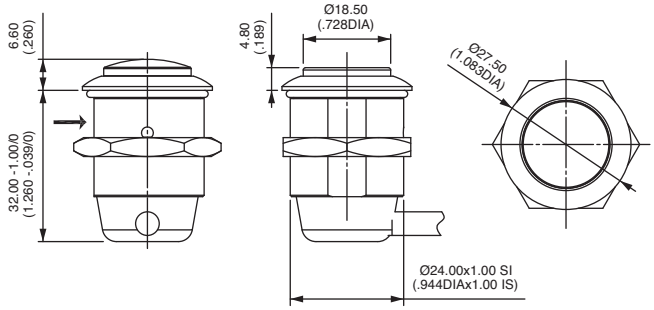

FP series

Fully illuminated pushbutton switches - bushing Ø 24 mm - momentary or latching

Options

LED CONTROL AND NUMBER OF POLES

Complete the model numbers on previous pages with one of the following codes.

	Function 1 (latching)	Function 3 (momentary)
Non-illuminated one pole **A**		
Non-illuminated two poles **B**		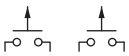

	Function 1 (latching)	Function 3 (momentary)
Independent one pole **C**	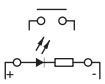	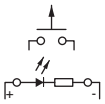
Independent two poles **D**	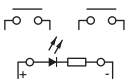	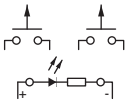
Independent one pole Dimming LED **E**	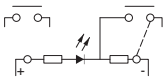	dotted line = jumper to be wired by the user. LED- has to be wired to one pin of pole 2.

CONTACT MATERIALS

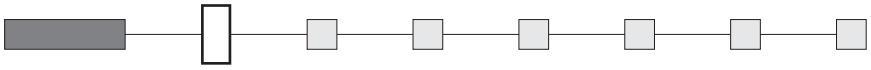

2 Silver
4 Silver, gold plated

ACTUATOR COLOUR

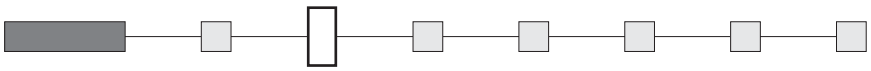

1 : blue - **2** : black - **3** : green - **4** : grey - **5** : yellow - **6** : red - **7** : white/natural - **9** : orange

BEZEL COLOUR

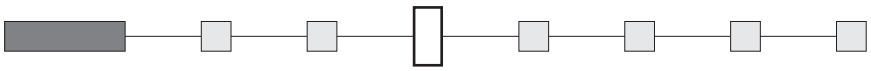

1 : blue - **2** : black - **3** : green - **4** : grey - **5** : yellow - **6** : red - **7** : white/natural

LED COLOUR

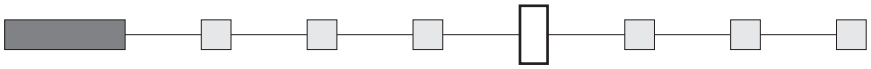

X : non-illuminated
A : blue - **B** : green - **C** : red - **D** : yellow - **E** : white - **F** : red/green - **G** : red/blue

LED RESISTOR

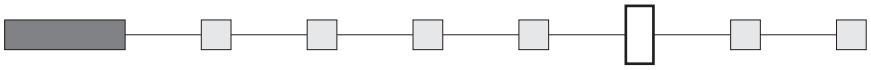

0 No resistor supplied
1 12V resistor
2 24V resistor
3 48V resistor

MARKING

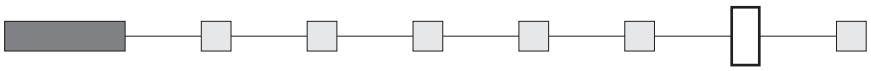

X No marking
1 Pad printing
2 Laser

SYMBOLS

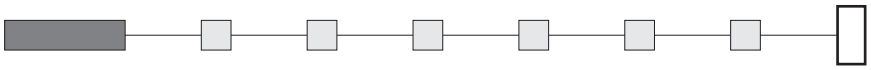

XX No symbol

Available symbols
See end of K-range, section D.

Marking colour
White marking for illuminated actuators (laser etching) and non-illuminated black actuators (pad printing). Black marking for non-illuminated colour actuators (pad printing). Other : on request.

Marking area
The symbol will be included in the hatched area.

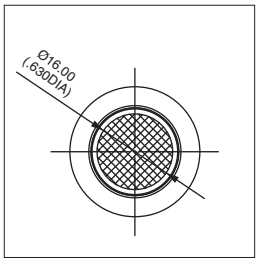

FP series

New!

Fully illuminated pushbutton switches - bushing Ø 30 mm - momentary or latching

Distinctive features and specifications

- ❑ **Full actuator or symbol illumination**
- ❑ **Suited for integrated designs**
- ❑ **Large but lightweight**
- ❑ **Pad printed or laser etched symbols**
- ❑ **Snap-in and threaded bushing models**

	Pad printing	Laser
Non-illuminated		
Illuminated		

ELECTRICAL SPECIFICATIONS

- Max. current/voltage rating with resistive load :
  - silver contacts (code 2) : 4A 12VDC
  - gold plated contacts (code 4) : 200mA 12VDC
- Initial contact resistance : 50 mΩ max.
- Insulation resistance : 1 GΩ min. at 500VDC
- Dielectric strength : 1.000 Vrms 50 Hz min.
- Electrical life at full load :
  - Momentary models : 1 million cycles (gold plated contacts)
    400.000 cycles (silver contacts)
  - Latching models : 200.000 cycles

MATERIALS

- Case : PA46
- Actuator : PA12, gloss finish
- Bushing/ bezel : ABS, gloss finish
- Contacts :
  Silver (code 2)
  or silver, gold plated (code 4)

GENERAL SPECIFICATIONS

- Panel thickness :
  - Snap-in version : 1,5 (.059) to 2 mm (.078) with panel gasket
    2 (.078) to 2,5 mm (.885) without panel gasket
  - Threaded bushing version : 1(.039) to 9 mm (.354) max.
- Total travel : 2,8 mm ± 0,5 mm
- Typical operating force : 8N ± 2N
- Low level or mechanical life :
  - Momentary models : 1 million cycles
  - Latching models : 200.000 cycles
- Torque : 2 Nm max. applied to nut
- Operating temperature : -40°C to +75°C

The company reserves the right to change specifications without notice.

FP series

Fully illuminated pushbutton switches - bushing Ø 30 mm - momentary or latching

Overview

MODEL STRUCTURE

FP

SERIES

Model

- **C** Snap-in, dia. 30 mm
- **D** Threaded bushing, dia. 30 mm

Actuator

- **R** Round, curved

Electrical function

- **1** OFF - ON
- **3** Normally open (NO)

LED control & No of poles

- **A** Non-illuminated, 1 pole
- **B** Non-illuminated, 2 poles
- **C** Independent, 1 pole
- **D** Independent, 2 poles
- **E** Independent, 1 pole, dimming LED

Terminals

- **1** Solder lugs

OPTIONS

Contact mat.

- **2** Silver
- **4** Silver, gold plated

Actuator colour

- **1** Blue
- **2** Black
- **3** Green
- **4** Grey
- **5** Yellow
- **6** Red
- **7** White/natural
- **9** Orange

Bezel colour

- **1** Blue
- **2** Black
- **3** Green
- **4** Grey
- **5** Yellow
- **6** Red
- **7** White/natural
- **8** Bright chrome

LED colour

- **X** Non-illum.
- **A** Blue
- **B** Green
- **C** Red
- **D** Yellow
- **E** White
- **F** Red/green
- **G** Red/blue

LED resistor

- **0** No resistor supplied
- **1** 12V resistor
- **2** 24V resistor
- **3** 48V resistor

Marking

- **X** No marking
- **1** Pad printing
- **2** Laser

Symbols

See end of series

ABOUT THIS SERIES
On the following pages, you will find successively :
model structure of switches and options in the same order as in above chart

Dimensions : first dimensions are in mm while inches are shown as bracketed numbers.

NOTICE : please note that not all combinations of above numbers are available.
Refer to the following pages for further information.

Mounting accessories : Standard hardware supplied :1 panel gasket (snap-in versions)
1 plastic hex nut and 1 panel gasket (threaded bushing versions)

Packaging unit : 20 pieces

FP series

New!

MODEL STRUCTURE

Fully illuminated pushbutton switches - bushing Ø 30 mm - momentary or latching

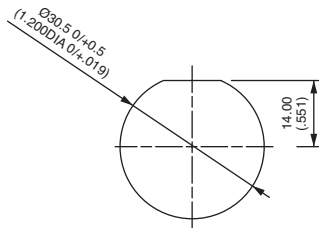

To order a product, replace • with one of the codes selected under "LED control and number of poles" on next page, then add he desired options.

MODEL STRUCTURE

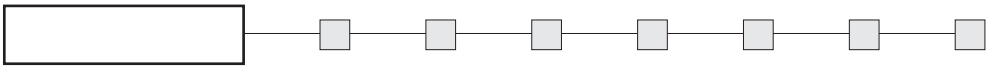

B2

Snap-in mounting - solder lug terminals

→ Flat

LATCHING
FPCR1•1

MOMENTARY (NO)
FPCR3•1

OFF - ON

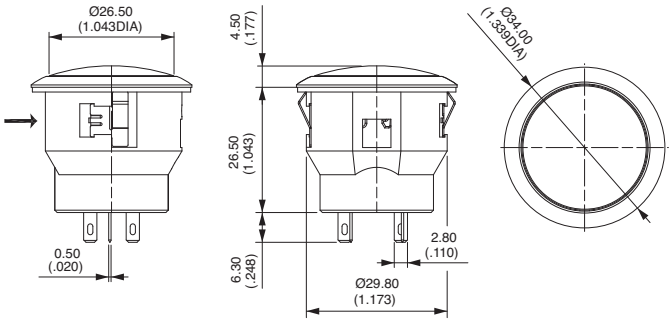

Mounting by threaded bushing - solder lug terminals

→ Flat

LATCHING
FPDR1•1

MOMENTARY (NO)
FPDR3•1

OFF - ON

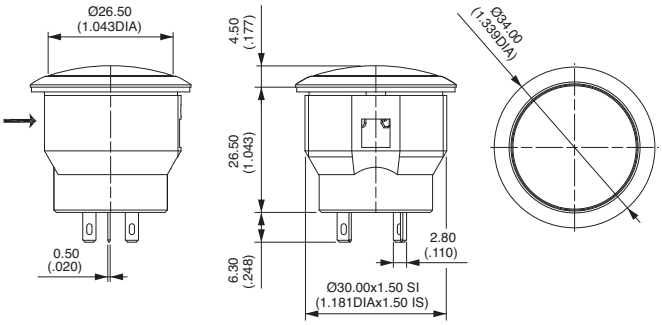

WIRING DIAGRAM

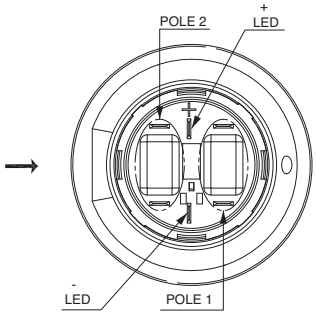

LED CONTROL AND NUMBER OF POLES

Complete the model numbers on previous pages with one of the following codes.

	Function 1 (latching)	Function 3 (momentary)
Non-illuminated one pole **A**		
Non-illuminated two poles **B**		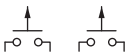

	Function 1 (latching)	Function 3 (momentary)
Independent one pole **C**	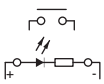	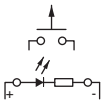
Independent two poles **D**	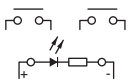	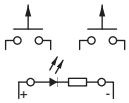
Independent one pole Dimming LED **E**	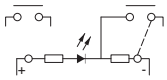	dotted line = jumper to be wired by the user. LED- has to be wired to one pin of pole 2.

CONTACT MATERIALS

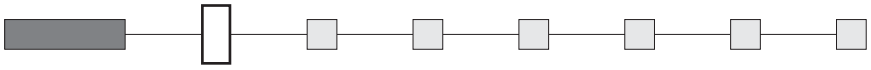

2 Silver
4 Silver, gold plated

ACTUATOR COLOUR

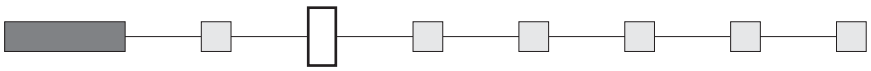

1 : blue - **2** : black - **3** : green - **4** : grey - **5** : yellow - **6** : red - **7** : white/natural - **9** : orange

BEZEL COLOUR

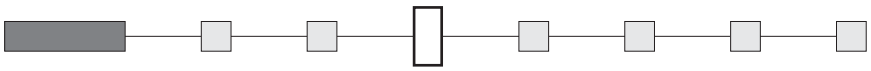

1 : blue - **2** : black - **3** : green - **4** : grey - **5** : yellow - **6** : red - **7** : white/natural - **8** : bright chrome

LED COLOUR

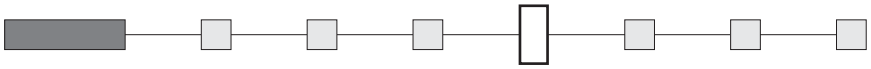

X : non-illuminated

A : blue - **B** : green - **C** : red - **D** : yellow - **E** : white - **F** : red/green - **G** : red/blue

LED RESISTOR

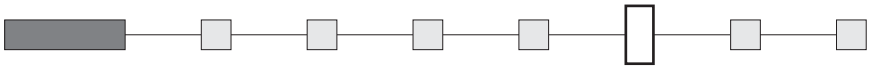

0 No resistor supplied
1 12V resistor
2 24V resistor
3 48V resistor

MARKING

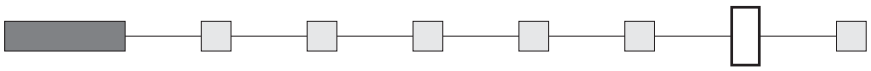

X No marking
1 Pad printing
2 Laser

SYMBOLS

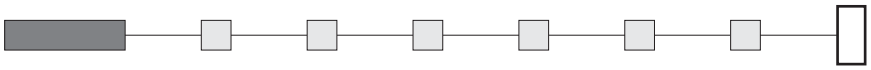

XX No symbol

Available symbols
See end of K-range, section D.

Marking colour
White marking for illuminated actuators (laser etching) and non-illuminated black actuators (pad printing). Black marking for non-illuminated colour actuators (pad printing). Other : on request.

Marking area
The symbol will be included in the hatched area.
(this is the optimal area, larger symbols can be made on request)

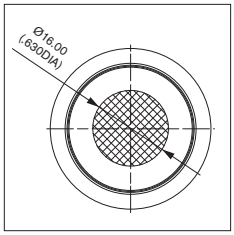

MP Series two-step momentary pushbutton switches with optical barrier contacts are designed for control of two-speed motors.

- **SIL2**
  Safety Integrity Level (SIL2) is a safety level defined by the IEC 61508 standard, corresponding to a high protection level for the equipment, production and employees.
  The electrical and mechanical redundancy of MP pushbuttons are ensured by :
  - redundant optical contacts for each active position,
  - two mechanical systems (a membrane and two springs).
  In case of mechanical or electrical failure, the pushbutton will provide a low logic signal if the equipment control system is programmed to verify output activation state.

- **Easy to integrate**
  Disconnectable crimp style connector. The PCB is integrated in the switch.

- **Resistant to harsh environments**
  IP68 front panel sealing and a bezel membrane resistant to UV and hydrocarbons make MP pushbuttons ideal for harsh environment applications.

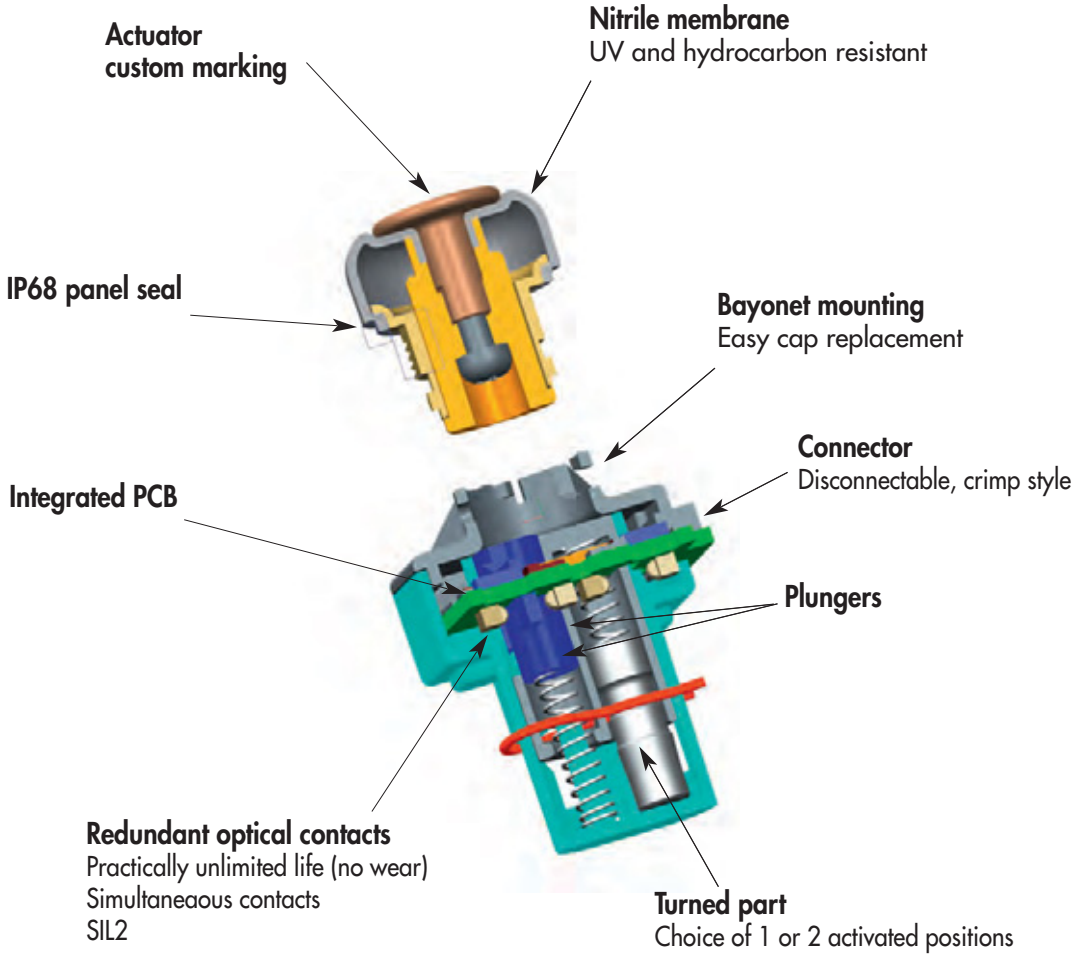

The company reserves the right to change specifications without notice.

MP series

Two-step pushbutton switches for harsh environments

Distinctive features and specifications

- ❑ **SIL 2**
- ❑ **Easy to integrate**
- ❑ **Sealed to IP68**
- ❑ **UV and hydrocarbon resistant**

B2

ELECTRICAL AND GENERAL SPECIFICATIONS

- Current/voltage rating : 20mA 5VDC max. / 3,3VDC min.
- Idling current : 20 to 80mA 5VDC - 11 to 44mA 3,3VDC`
- NPN output signal : 20mA with 12VDC max. commutation voltage
- Operating force :
  - step 1 : 11,5N ± 1,5N
  - step 2 : 14,5N ± 1,5N
- Travel :
  - 1 step : 4 mm ± 0,4 mm
  - 2 steps : 6,65 mm ± 0,4 mm
- Mechanical life expectancy : 1 million cycles on each position

MATERIALS

- Case + plungers : POM
- Bezel membrane : UV and hydrocarbon resistant nitrile
- Bushing + actuator : polyamide 6/6
- Connector : disconnectable crimp-style JST SM09B-SRSS-TB

Note : mating connector JST09SR-3S

ENVIRONMENTAL SPECIFICATIONS

- SIL 2 according to IEC 61508
- Sealing to IP68 according to IEC 60529
- Operating temperature : -20°C to +70°C
- Static resistance : 10KV

PANEL CUT-OUT & RECOMMENDED MOUNTING

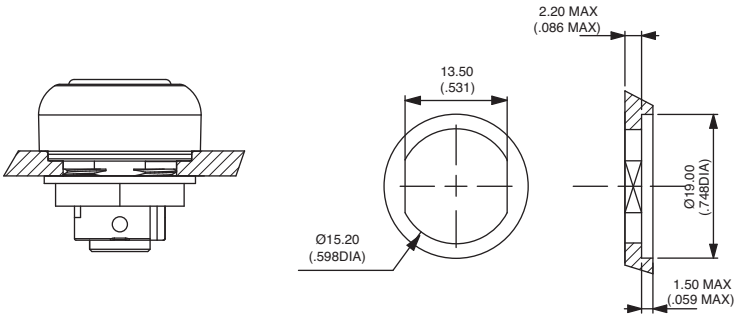

Diagram of an optical barrier redundant in position 1

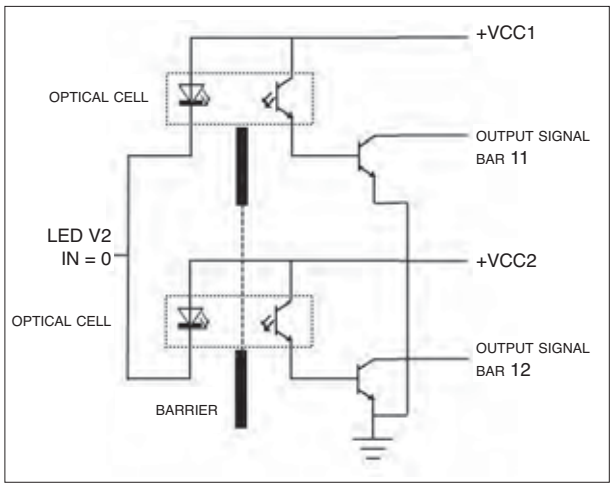

MP pushbutton switches feature two active positions.

Each position is activated by redundant optical contacts.

The redundant barriers have separate power supplies.

The output signal is equivalent to a NPN output signal.

The load should be connected between VCC and Output Signal Bar

Wiring diagram for connector JST SM09B-SRSS-TB

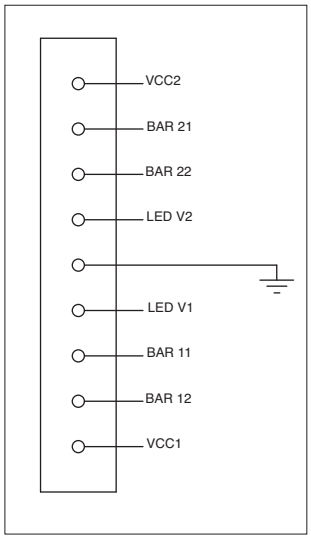

BAR 11 = output signal of step 1
BAR 12 = output signal of step 1
BAR 21 = output signal of step 2
BAR 22 = output signal of step 2

VCC1 supplies the optical barriers with BAR 11 and BAR 21 outputs.
VCC2 supplies the optical barriers with BAR 12 and BAR 22 outputs.

Optical cell inputs LED V2 and LED V1 are at zero.

Activation state of optical cells

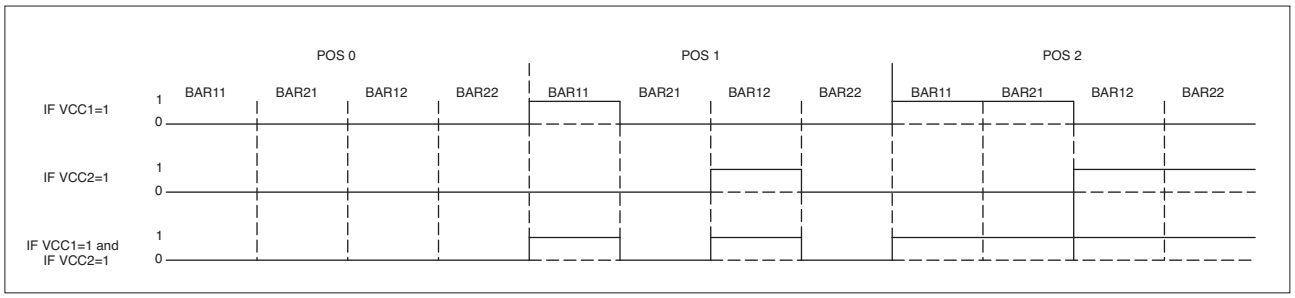

Note : MP pushbutton switches can be used in low power mode. Please contact APEM.

MP series

Two-step pushbutton switches for harsh environments

Overview

MODEL STRUCTURE

MP			
SERIES	Model	Assembly elements	Positions

Model

A	Standard

Assembly elements

F	Full product (T + L)
T	Cap only
L	Base only

Positions

Blank	Cap only
1	1 step
2	2 steps

OPTIONS

PCB

Blank	Cap only
01 to 04	See following pages.

Marking

Blank	Base only
0	Without marking

Actuator colours

Blank	Base only
1	Blue
B	Dark blue
2	Black
3	Green
5	Yellow
6	Red
7	White
9	Orange

Connector

Blank	Base only
0	JST SM09B-SRSS-TB

ABOUT THIS SERIES
On the following pages, you will find successively :
model structure of switches and options in the same order as in above chart

Dimensions : first dimensions are in mm while inches are shown as bracketed numbers.

NOTICE : please note that not all combinations of above numbers are available.
Refer to the following pages for further information.

Packaging unit : 25 pieces

MP series

Two-step pushbutton switches for harsh environments

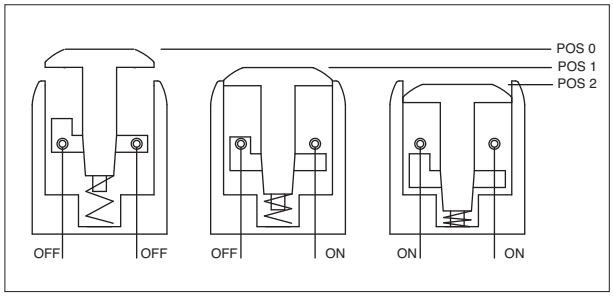

MODEL STRUCTURE

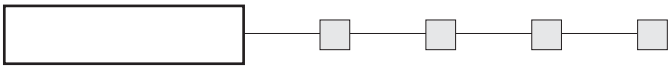

Cap only

MPAT

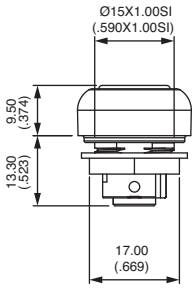

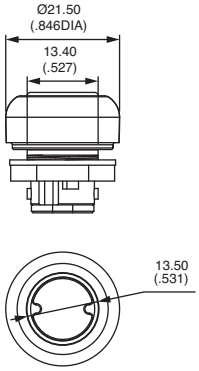

Add desired actuator colour (see options).

Switch base only

MPAL

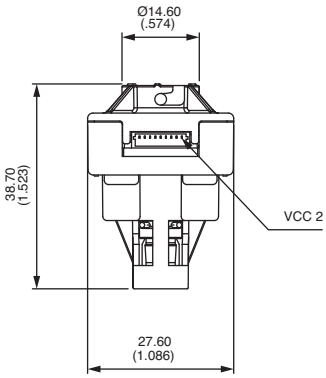

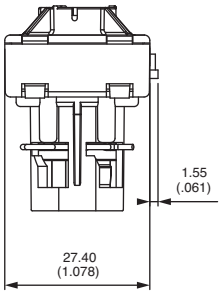

Add desired PCB (see options).

Full product

One-step switch
MPAF1 OFF MOM

Two-step switch
MPAF2 OFF MOM MOM

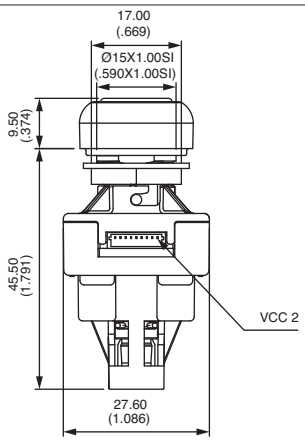

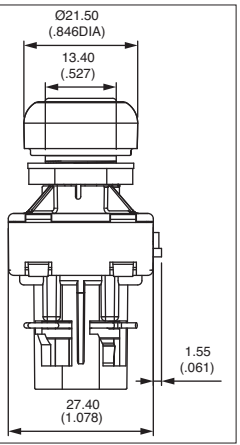

PCB

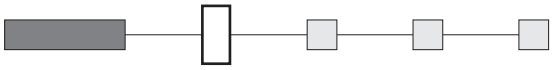

Blank Cap only

	No of barriers	No of steps	Contact Redundancy
01	4	2	yes
02	2	1	yes
03	2	2	no
04	1	1	no

MARKING

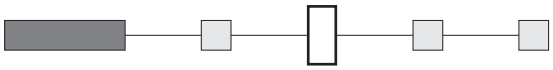

Blank Base only

0 Without marking

ACTUATOR COLOURS

Blank Base only

1 Blue
B Dark blue
2 Black
3 Green
5 Yellow
6 Red
7 White
9 Orange

CONNECTOR

Blank Cap only

0 JST SM09B-SRSS-TB

LPI series

Tactile pushbutton switches with large actuator

Distinctive features

❑ Common features

- Large ergonomic actuator (Ø 35 mm)
- Tactile feedback
- Low behind-panel depth (21 mm max.)
- Stylish design
- Long life

This series has been developed on a modular base in order to fit the exact needs of technicians and end-users.

❑ Installation options

The LPI series has a number of features to ensure easy installation:

- **Front or rear mounting**
- With or without sealing
- 2 separate circuits for NO/NC 5A version
- Terminal block connector for 0,1A NO version
- 3 different LED voltages: 6V, 12V, 24V
- Integrated LED resistor

❑ Aesthetic options

- **Ring or dot illumination**
- Wide range of LED colours
- Wide range of bezel colours
- Many different actuator types and colours

❑ Designed to meet the requirements of EN81-70

This product meets the requirements of EN81-70 and is ideal for use in all types of indoor lifts.

❑ Flexibility of marking

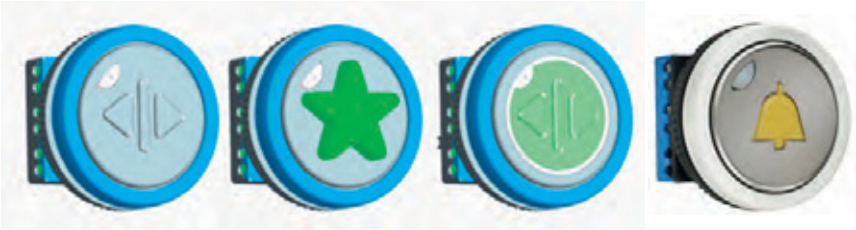

The company reserves the right to change specifications without notice.

LPI series

Tactile pushbutton switches with large actuator

Specifications

For full series information, please visit our website.

B2

ELECTRICAL SPECIFICATIONS

- Snap-action, momentary function
- Mechanical life : 1.000.000 cycles min. for 5A NO/NC
  5.000.000 cycles min. for 50mA NO
- Max. currrent/voltage rating with resistive load :

5A NO/NC version	50mA NO version
5A 12VDC - 50.000 cycles 100mA 12VDC - 1.000.000 cycles	50mA 24 VDC - 5.000.000 cycles

- Min. current with resistive load : 0,5mA at 24VDC for NO version
- Contact resistance : 100mΩ max.
- Dielectric strength : 500Vrms 50Hz between terminals
  1.000 Vrms 50 Hz between terminals and ground
- Insulation resistance : 10MΩ at 500VDC
- Integrated resistors for illuminated versions
- LED current : 20mA typical for dot or ring (30mA max.)
- LED protected from reverse polarity
- Stand-by consumption : 0,5VA max.

MATERIALS

- Switch block : thermoplastic for 5A NO/NC
- Contacts :
  5A NO/NC : silver, gold plated
  50mA NO : silver
- Actuator crimped symbol : 304L stainless steel

MECHANICAL SPECIFICATIONS

- Environmental protection :
  - IP53 for sealed version
  - IP40 for unsealed version
- Impact resistance :
  - IK06 for NO/NC version
  - IK04 for NO version
- Operating force : 2,5 to 5N (unsealed)
- Total travel : 2 mm ±0,3 mm
- Operating temperature :
  - 20°C to +65°C
- Storage temperature :
  - 40°C to +70°C

PANEL CUT-OUT

Panel thickness : 1 to 4 mm (.039 to .157)

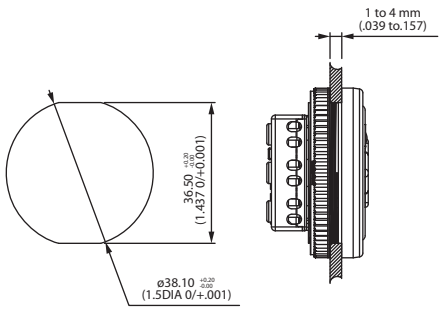

Front mouting

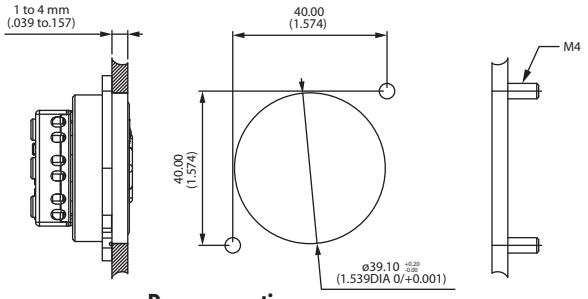

Rear mounting

Unsealed version

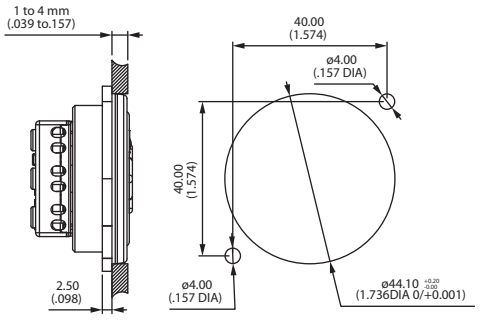

Sealed version

LPI series

Tactile pushbutton switches with large actuator

Overview

SWITCH BLOCK

LPI

SERIES

Electrical functions

3	50mA NO
5	5A NO/NC

Illumination

0	No illumination
1	Dot
4	Ring

LED voltage

XX	None
06	6V
12	12V
24	24V

LED colour

X	None
R	Red
G	Green
B	Blue
A	Amber
W	White

OPERATOR

Mounting

1	Front mounting
2	Rear mounting

Sealing

X	Unsealed
K	Sealed

Bezel colour

X	No bezel
1	Blue
2	Black
3	Green
4	Grey
5	Yellow
6	Red
7	White
9	Amber
N	Satin grey Consult APEM.

Actuator type

1	Raised crimped
2	Raised moulded
3	Raised screen printed
4	Without symbol
5	Screen printed

Actuator colour

7	White

Actuator marking

See end of the series.

ABOUT THIS SERIES

On the following pages, you will find successively switch block order numbers and operator order numbers.

Dimensions : first dimensions are in m while inches are shown as bracketed numbers.

NOTICE : please note that not all combinations of above numbers are available.
Refer to the following pages for further information.

Packaging unit : 15 pieces for front mounting versions - 20 pieces for rear mounting versions.

Sealing boot available to increase the sealing of LPI switches. See section H.

Tact switches

Section C

D162 series

SMT tact switches

6 x 6 mm case

- ❑ **Excellent coplanarity**
- ❑ **Right angle for pick and place**

ELECTRICAL SPECIFICATIONS

- Normally open (NO)
- Current/voltage rating : 50mA 12VDC max.
- Contact resistance : 100 mΩ max.
- Insulation resistance (at 100VDC) : 1.000 MΩ min.
- Dielectric strength : 250 Vrms
- Electrical life : 40.000 cycles

MATERIALS

- Case : high temperature 4/6 nylon
- Actuator : high temperature 4/6 nylon
- Cover : steel, tin plated
- Contacts : stainless steel or copper alloy, min. 0,2 micron gold plated over nickel barrrier
- Terminals : copper alloy, min. 0,2 micron gold plated over nickel barrier

C

GENERAL SPECIFICATIONS

- Operating force : 1,6N ± 0,3N
- Travel : 0,2 mm ± 0,1 mm
- Shocks : 50 g according to IEC 512-4
- Moisture : 21 days according to IEC 512-6
- Temperature range : -40°C to +90°C
- Tape and reel packaging
- SMT soldering

Right angle mounting

Model No
D162-02

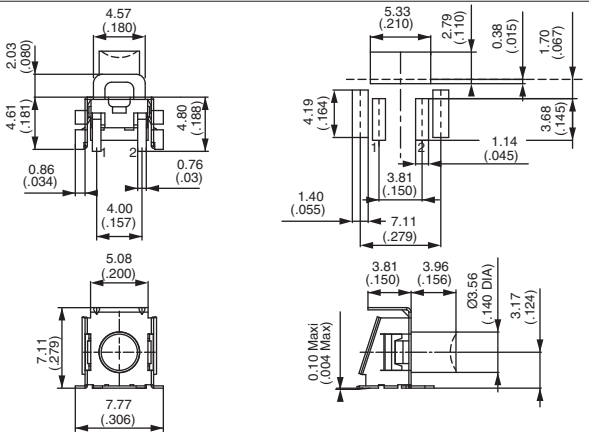

PACKAGING

Quantity per reel : 600 pieces

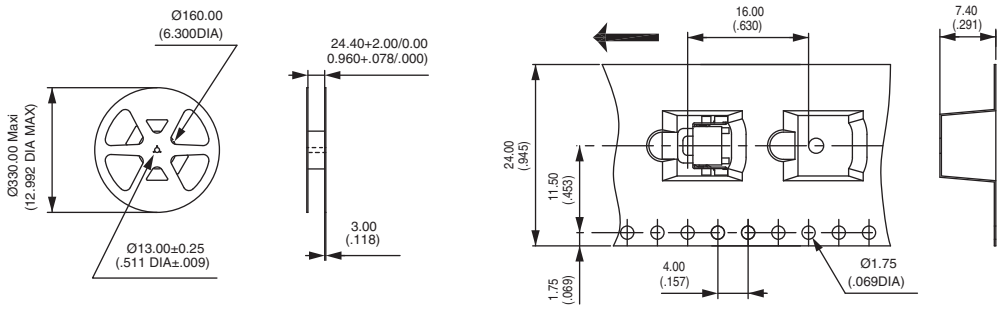

Dimensions : first dimensions are in mm while inches are shown as bracketed numbers.

The company reserves the right to change specifications without notice.

PHAP33 series

Tact switches

Distinctive features and specifications

- ❑ **Wide range of case formats**
- ❑ **SMT and through-hole models**
- ❑ **Normally closed models available**

Performances \ Models	PHAP3390 PHAP3391	PHAP3381 PHAP3382 PHAP3383 PHAP3384	PHAP3371 PHAP3372 PHAP3373 PHAP3374 PHAP3378	PHAP3355 PHAP3361 PHAP3362 PHAP3363 PHAP3365 PHAP3366	PHAP3301 PHAP3302 PHAP3303 PHAP3305 PHAP3306 PHAP3307 PHAP3308 PHAP3368	PHAP3350 PHAP3351 PHAP3352 PHAP3353	PHAP3320 PHAP3321
Current/voltage rating	50mA 12VDC						
Contact resistance	100 mΩ max.						
Insulation resistance	100 MΩ min.						
Dielectric strength	250 VAC min. (1 minute)						
Electrical life (cycles)	70.000	70.000	75.000	30.000	100.000	100.000	100.000
Operating force	2,6N ± 0,5N	1,6N ± 0,5N	1,6N +0,5/-0,3N	1,8N ± 0,5N	1,6N ± 0,5N	2N ± 0,3N	1,6N ± 0,5N
Travel	0,20 mm	0,25 mm	0,25 mm	0,25 mm	0,25 mm	0,50 mm	0,30 mm
Operating temperature	-20°C to +70°C						
Storage temperature	-30°C to +80°C						
Vibrations	10-500 Hz / 10 g						
IR reflow soldering	260°C for 40 seconds max.				-		
Wave soldering	255°C for 5 seconds max.						
Manual soldering	300°C for 3 seconds max.						

Dimensions : First dimensions are in mm while inches are shown as bracketted numbers.

Packaging unit : 1.000 pieces and multiples, except for tape and reel packaging (see following pages).

The company reserves the right to change specifications without notice.

PHAP33 series

SMT tact switches

Microminiature and ultra-low profile - 4,2 x 4,2 mm case

- **Ultra-compact size for board space saving : 4,2 x 4,2 mm case, 1,5 mm button height from PCB**
- **Reflow solderable**
- **With or without positioning pins**
- **For tape and reel packaging, add "R" at the end of model number.**

C

With positioning pins

Model number
PHAP3390

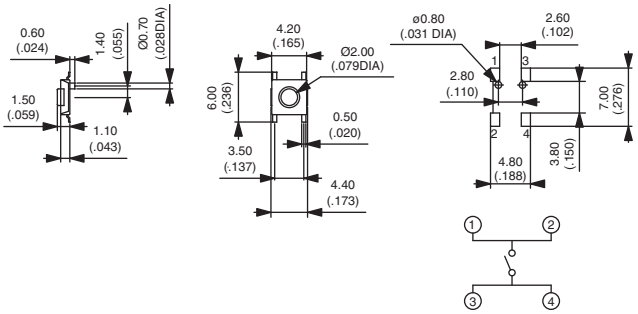

Operating force : 2,6N ± 0,5N - Travel : 0,20 mm

Without positioning pins

Model number
PHAP3391

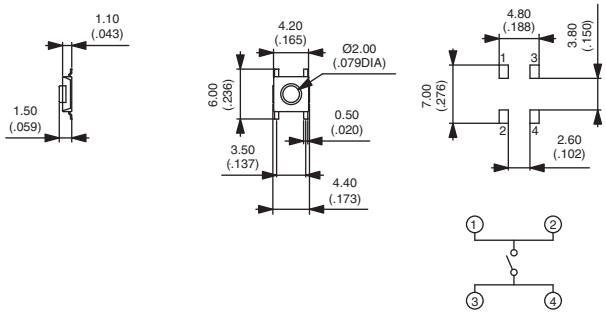

Operating force : 2,6N ± 0,5N - Travel : 0,20 mm

PACKAGING

To order a product with tape and reel packaging, add "R" at the end of its model number.
Example : PHAP3390R.

Quantity per reel : 3.400 pieces

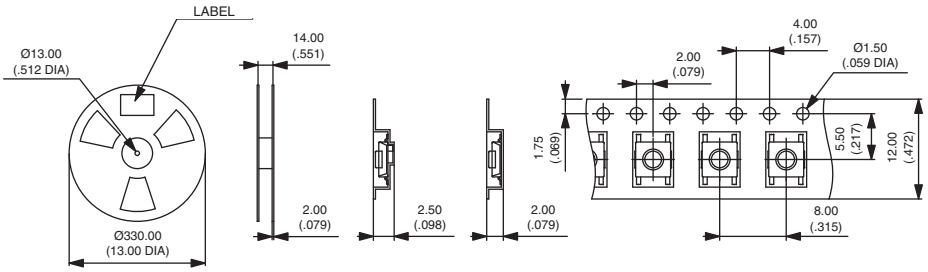

PHAP33 series

SMT tact switches

Ultra-low profile - 6 x 6 mm case

- **Ultra-compact size for board space saving : 6 x 6 mm case, 1,6 mm button height from PCB**
- **Reflow solderable**
- **Types for iron soldering (L = 10 mm)**
- **With positioning pins**
- **With or without grounding tab for protection against electrostatic discharges**
- **For tape and reel packaging, add "R" at the end of model number.**

Without grounding tab

Model No	Dim. «L»
PHAP3381	8 mm
PHAP3382	10 mm

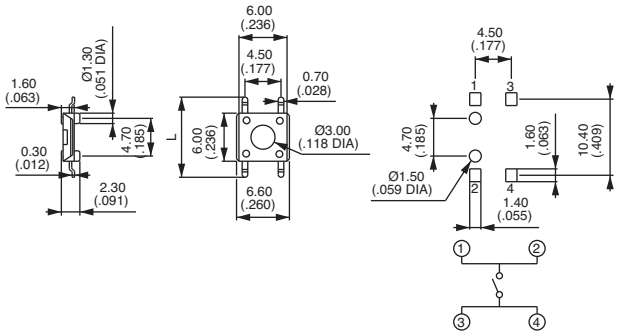

Operating force : 1,6N ± 0,5N - Travel : 0,25 mm

With grounding tab

Model No	Dim. «L»
PHAP3383	8 mm
PHAP3384	10 mm

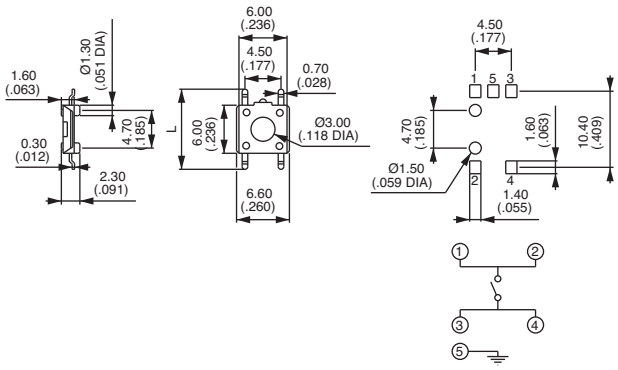

Operating force : 1,6N ± 0,5N - Travel : 0,25 mm

PACKAGING

To order a product with tape and reel packaging, add "R" at the end of its model number.
Example : PHAP3383R.

Quantity per reel : 2.200 pieces

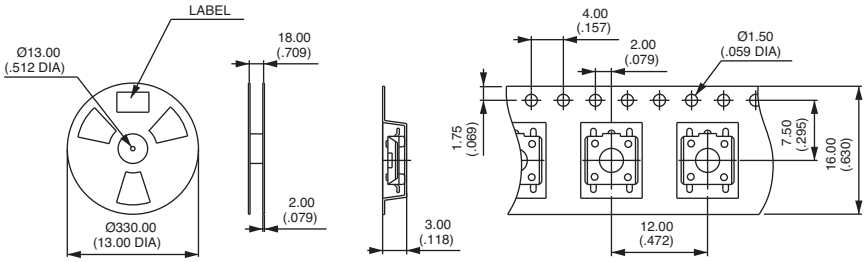

PHAP33 series

SMT tact switches

Low profile - 6,2 x 6,2 mm case

- **Ultra-compact size for board space saving : 6,2 x 6,2 mm case, 2,6 to 3,4 mm button height from PCB**
- **Reflow solderable**
- **With or without grounding tab for protection against electrostatic discharges**
- **Models with external terminals type G or internal terminals type J**
- **For tape and reel packaging, add "R" at the end of model number.**

C

External terminals type G (gullwing)

Model No	Dim. «L»
PHAP3371	2,6 mm
PHAP3371A	3,4 mm

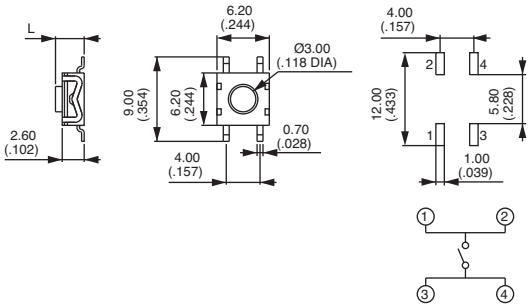

Operating force : 1,6N + 0,5N/-0,3N - Travel : 0,25 mm

Internal terminals type J - tape and reel packaging

Model No	Dim. «L»
PHAP3372R	2,6 mm
PHAP3372AR	3,4 mm

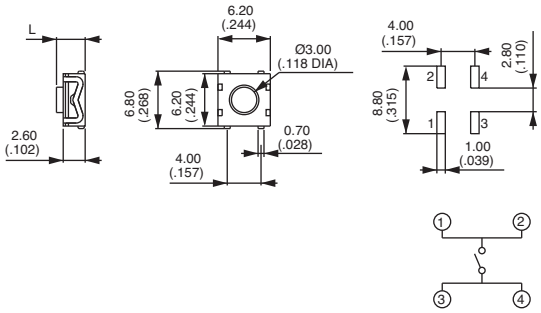

Operating force : 1,6N + 0,5N/-0,3N - Travel : 0,25 mm

PACKAGING

To order a product with tape and reel packaging, add "R" at the end of its model number.
Example : PHAP3371R.
Quantity per reel : 1.600 pieces

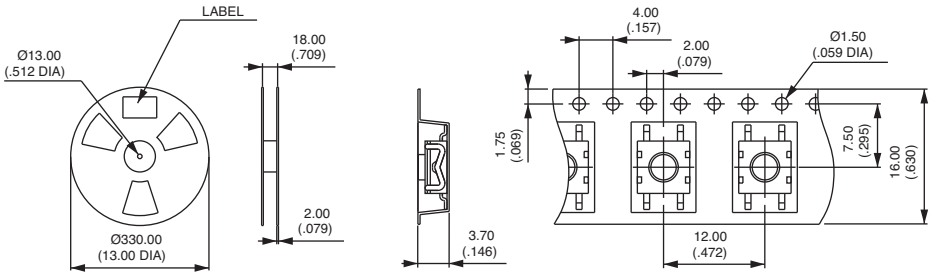

Button height from PCB : 2,9 mm

Model No
PHAP3373

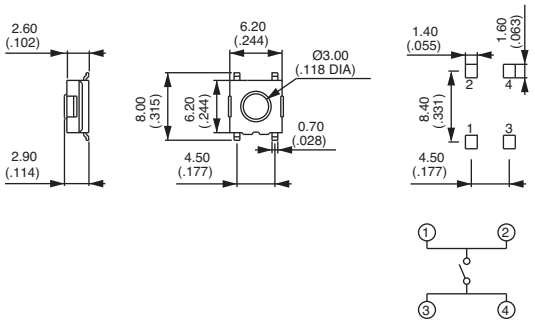

Operating force : 1,6N + 0,5N/-0,3N - Travel : 0,25 mm

Button height from PCB : 3,1 mm - with grounding tab

Model No	Dim. «L»
PHAP3374	8 mm

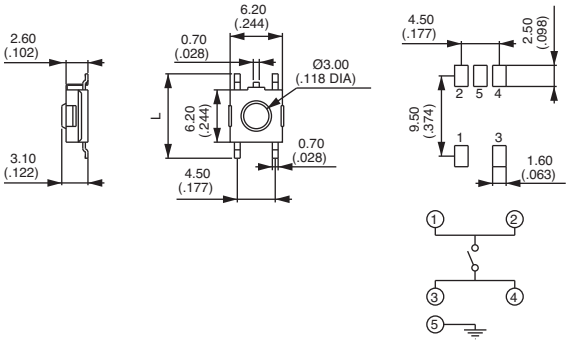

Operating force : 1,6N + 0,5N/-0,3N - Travel : 0,25 mm

PACKAGING

To order a product with tape and reel packaging, add "R" at the end of its model number.
Example : PHAP3373R.

Quantity per reel : 1.700 pieces

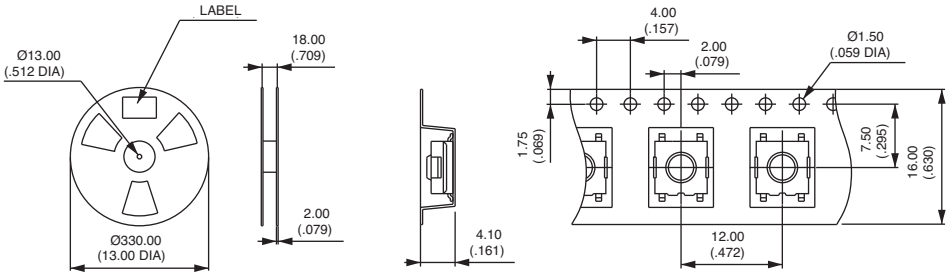

PHAP33 series

SMT tact switches

Normally closed - 7,6 x 7,6 mm case

- **Compact size for board space saving : 7,6 x 7,6 mm case, 4,3 mm button height from PCB**
- **Reflow solderable**
- **Standard PCB layout**

C

Normally closed

Model No
PHAP3378R

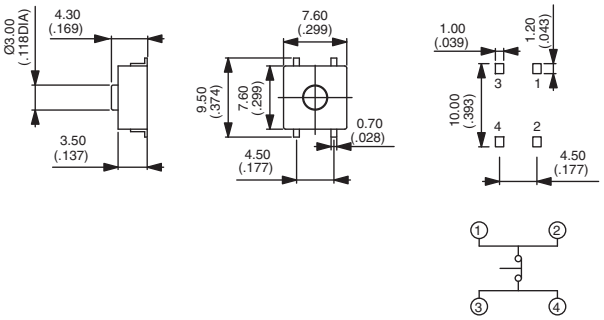

Operating force : 1,6N ± 0,5N - Travel : 0,25 mm

PACKAGING

Quantity per reel : 1.300 pieces

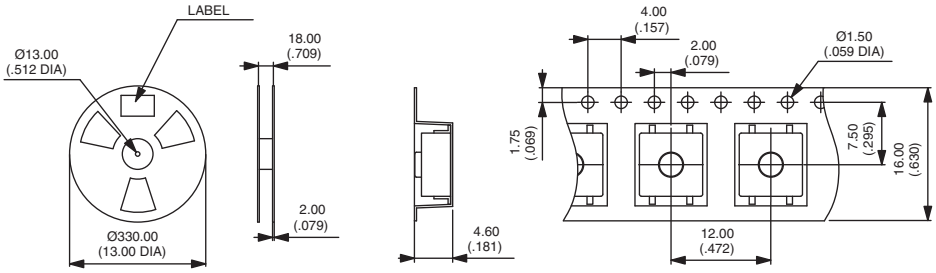

PHAP33 series

SMT tact switches

Microminiature - 6 x 3,5 mm case

- **Ultra-compact size for board space saving : 6 x 3,5 mm case, 4,3 or 5 mm button height from PCB**
- **Right angle version available**

Standard mounting

Model No	Dim. «L»
PHAP3361	4,3 mm
PHAP3361A	5,0 mm

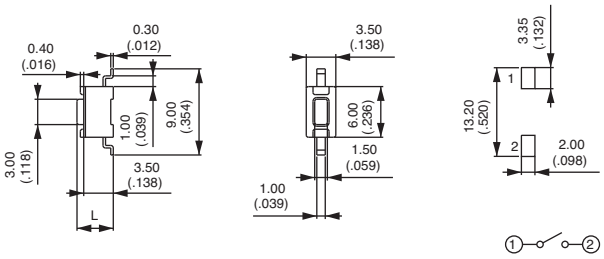

For tape and reel packaging, add "R" at the end of model number.
Operating force : 1,8N ± 0,5N - Travel : 0,25 mm

Right angle mounting

Model No
PHAP3355R

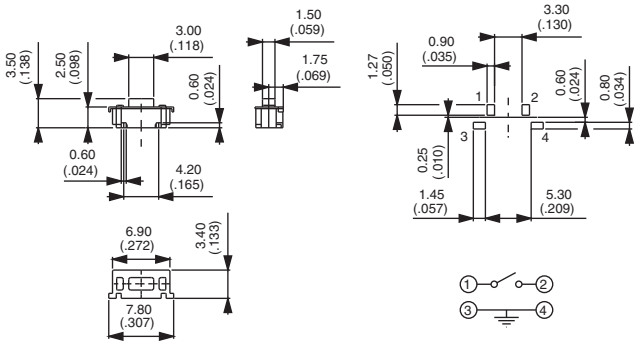

Operating force : 1,8N ± 0,5N - Travel : 0,25 mm

PACKAGING

Quantity per reel :
PHAP3361R : 1.800 pieces
PHAP3361AR : 1.800 pieces
PHAP3355R : 2.000 pieces

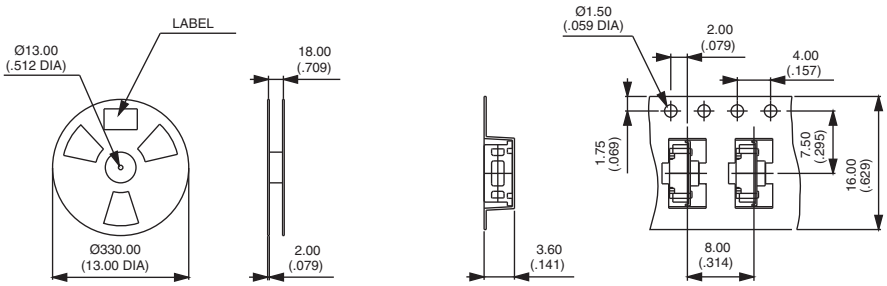

PHAP33 series

SMT tact switches

Microminiature - Low profile - 6,1 x 3,7 mm case

- **Ultra-compact size for board space saving : 6,1 x 3,7 mm case, 2,5 mm button height from PCB**
- **Available with flat or bent terminals**

C

Flat terminals

Model No
PHAP3365R

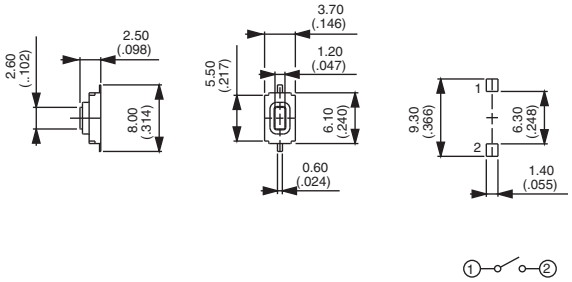

Operating force : 1,8N ± 0,5N - Travel : 0,25 mm

Bent terminals

Model No
PHAP3366R

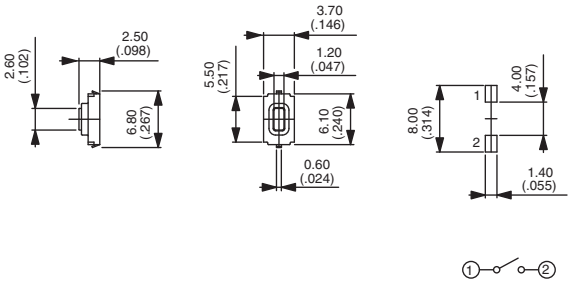

Operating force : 1,8N ± 0,5N - Travel : 0,25 mm

PACKAGING

Quantity per reel : 3.000 pieces

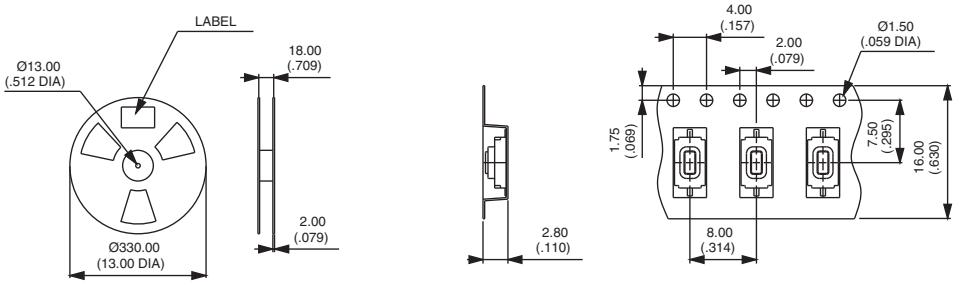

PHAP33 series

SMT tact switches

6 x 6 mm case

- **4,3 to 13 mm button height from PCB**
- **Excellent tactile feedback (snap dome)**
- **Standard PCB layout**
- **Caps for model with square actuator**

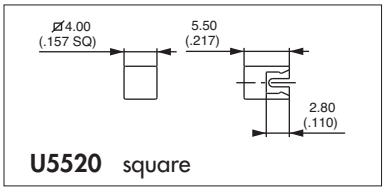

U5520 square

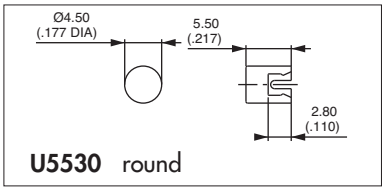

U5530 round

Cap colours : 1 : blue - 2 : black - 3 : green
5 : yellow - 6 : red - 7 : ivory

Round actuator

Model No	Dim. «L»	Actuator colour
PHAP3368	4,3 mm	black/white
PHAP3368A	5,0 mm	black/white
PHAP3368B	9,5 mm	black
PHAP3368C	8,0 mm	white
PHAP3368D	13,0 mm	black
PHAP3368E	7,3 mm	ivory
PHAP3368F	8,5 mm	grey

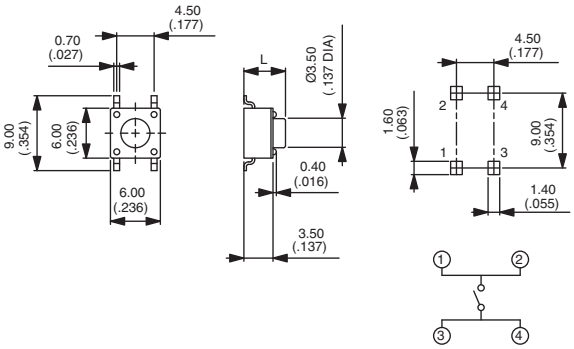

Operating force : 1,6N ± 0,5N - Travel : 0,25 mm

Square actuator

Model No
PHAP3368T

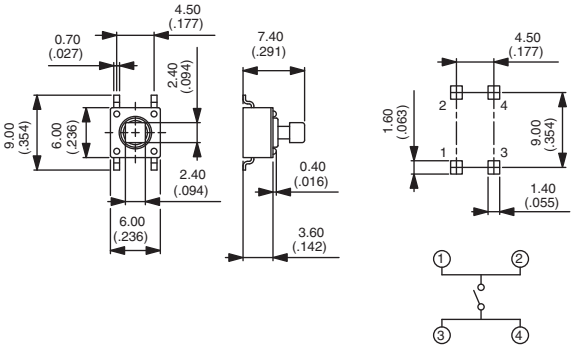

Operating force : 1,6N ± 0,5N - Travel : 0,25 mm
PHAP3368TR - Quantity per reel : 750 pieces

Edge of PCB mounting

Model No
PHAP3305ASR

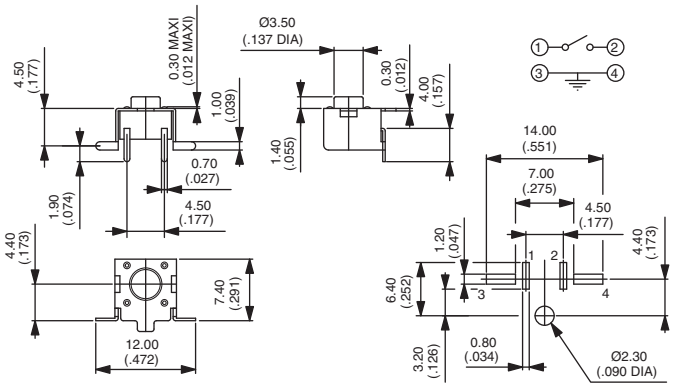

Operating force : 1,6N ± 0,5N - Travel : 0,25 mm
Quantity per reel : 650 pieces

C

PHAP33 series

Through-hole tact switches

Microminiature - 6 x 3,5 mm case

- **Ultra-compact size for board space saving : 6 x 3,5 mm case, 4,3 or 5 mm button height from PCB**
- **Crimped terminals for direct mounting onto PCB**
- **Moulded-in terminals for wave soldering**

C

Standard mounting

Model No	Dim. «L»
PHAP3362	4,3 mm
PHAP3362A	5,0 mm

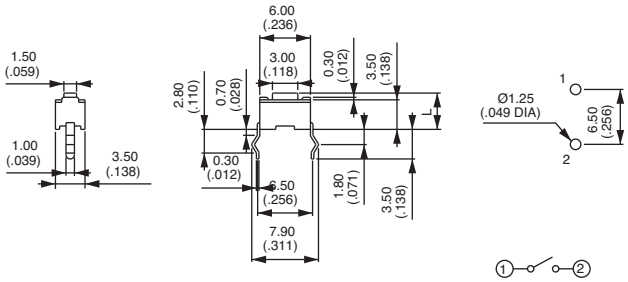

Operating force : 1,8N ± 0,5N - Travel : 0,25 mm

Right angle mounting

Model No
PHAP3363

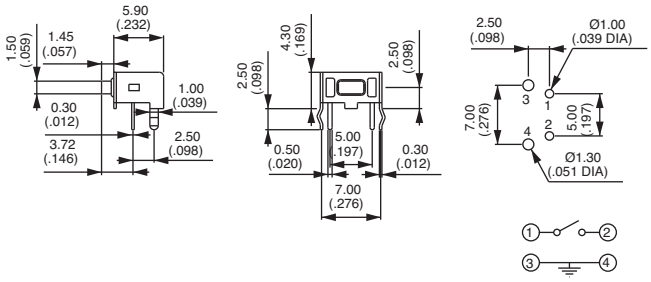

Operating force : 1,8N ± 0,5N - Travel : 0,25 mm

PHAP33 series

Through-hole tact switches

6 x 6 mm case

- **4,3 to 13 mm button height from PCB**
- **Excellent tactile feedback (snap dome)**
- **Crimped terminals for direct mounting onto PCB**
- **With or without grounding tab for protection ag. electrostatic discharges**
- **Moulded-in terminals for wave soldering**
- **Caps for model with square actuator (L = 2,4 mm) :**

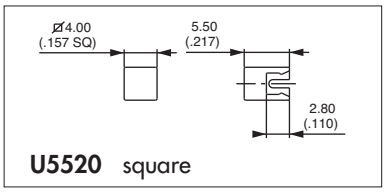

U5520 square

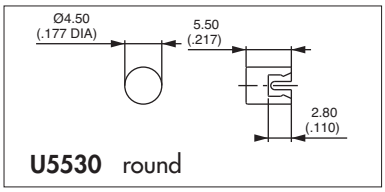

U5530 round

Cap colours : 1 : blue - 2 : black - 3 : green - 5 : yellow - 6 : red - 7 : ivory

Straight terminals

Model No	Dim. «L»	Actuator colour
PHAP3301	4,3 mm	black
PHAP3301A	5,0 mm	black
PHAP3301B	9,5 mm	black
PHAP3301C	8,0 mm	white
PHAP3301D	13,0 mm	black
PHAP3301E	7,3 mm	ivory
PHAP3301F	8,5 mm	grey

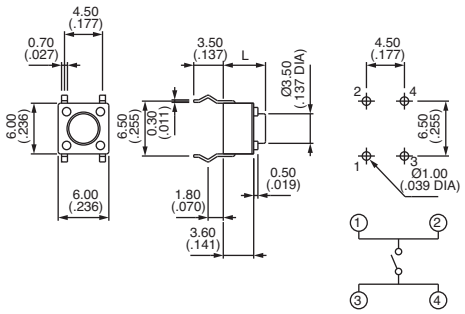

Operating force : 1,6N ± 0,5N - Travel : 0,25 mm

Straight terminals - with grounding tab

Model No	Dim. «L»	Actuator colour
PHAP3302	4,3 mm	black
PHAP3302A	5,0 mm	black
PHAP3302B	9,5 mm	black
PHAP3302C	8,0 mm	white
PHAP3302D	13,0 mm	black
PHAP3302E	7,3 mm	ivory

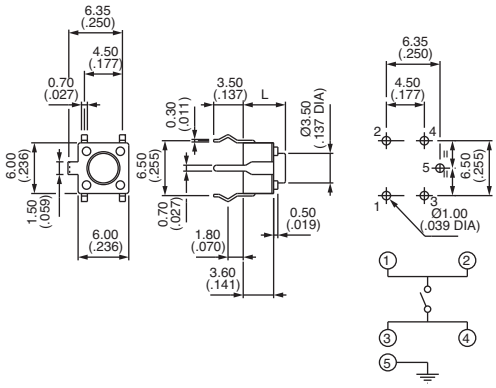

Operating force : 1,6N ± 0,5N - Travel : 0,25 mm

Straight terminals - square actuator

Model No	Dim. «L»	Actuator colour
PHAP3303	2,4mm	blue
PHAP3303A	2,8 mm	black

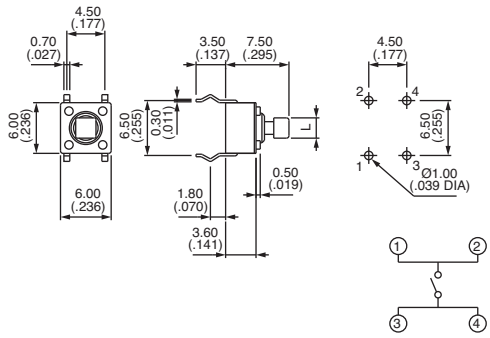

Operating force : 1,6N ± 0,5N - Travel : 0,25 mm

PHAP33 series

Through-hole tact switches

6 x 6 mm case

Right angle mounting

Model No	Dim. «L»	Actuator colour
PHAP3305	3,15 mm	black
PHAP3305A	3,85 mm	black
PHAP3305B	8,35 mm	black
PHAP3305C	6,85 mm	white
PHAP3305D	11,85 mm	black
PHAP3305E	6,15 mm	ivory
PHAP3305T	6,15 mm	blue 2.4 x 2.4

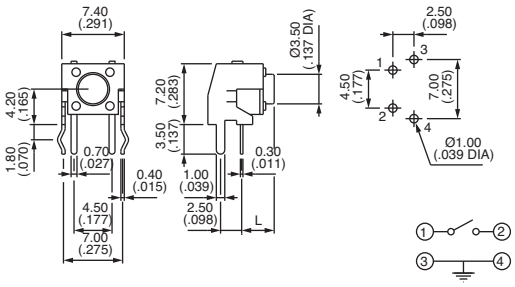

Operating force : 1,6N ± 0,5N - Travel : 0,25 mm

Right angle mounting of 2 tact switches

Model No	Dim. «L»	Actuator colour
PHAP3306	3,15 mm	black
PHAP3306A	3,85 mm	black
PHAP3306B	8,35 mm	black
PHAP3306C	6,85 mm	white
PHAP3306D	11,85 mm	black
PHAP3306E	6,15 mm	ivory

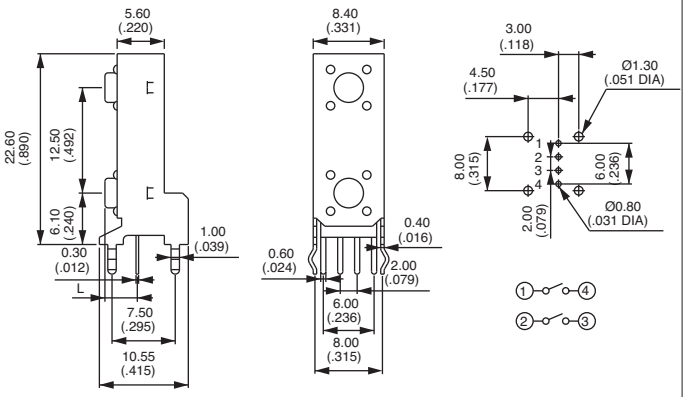

Operating force : 1,6N ± 0,5N - Travel : 0,25 mm

Long straight terminals + tape

Model No	Dim. «L»
PHAP3307	4,3 mm
PHAP3307A	5,0 mm
PHAP3307G	7,0 mm

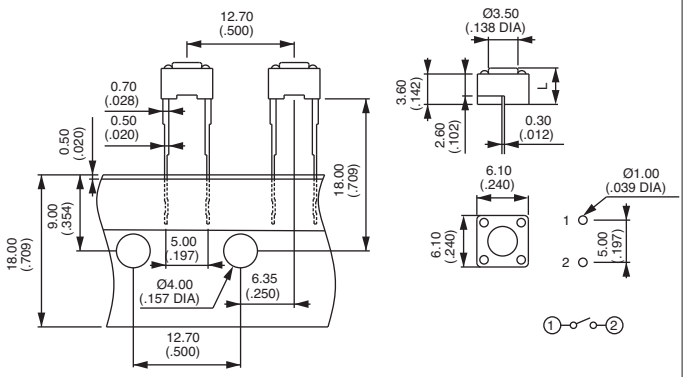

Operating force : 1,6N ± 0,5N - Travel : 0,25 mm
Quantity per tape : 1.000 pieces

Straight terminals + LED

Model No	LED colour	LED If	LED Vf
PHAP3308	-	-	-
PHAP3308R	red	15mA	2,1V
PHAP3308G	green	30mA	2,2V
PHAP3308Y	yellow	30mA	2V

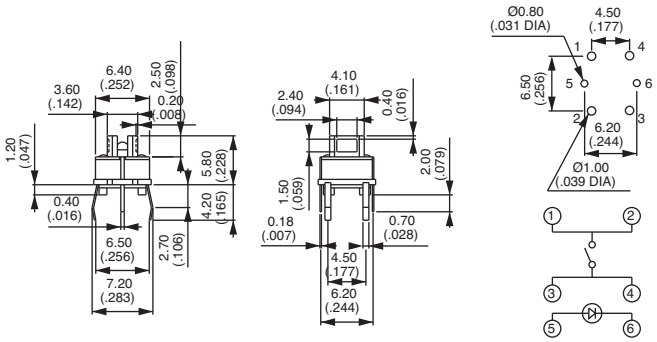

Operating force : 1,6N ± 0,5N - Travel : 0,25 mm

PHAP33 series

Through-hole tact switches

Sealed - 7,2 x 7,2 mm or 10 x 10 mm case

- **Dust and splash proof**
- **Crimped terminals for direct mounting onto PCB**
- **With or without grounding tab for protection against electrostatic discharges**
- **Moulded-in terminals for wave soldering**

7,2 x 7,2 mm case - straight terminals - grounding or not

Grounding	Dim. «L»
PHAP3350	5,0 mm
PHAP3350A	9,0 mm
PHAP3350B	13,0 mm

Non grounding	Dim. «L»
PHAP3351	5,0 mm
PHAP3351A	9,0 mm
PHAP3351B	13,0 mm

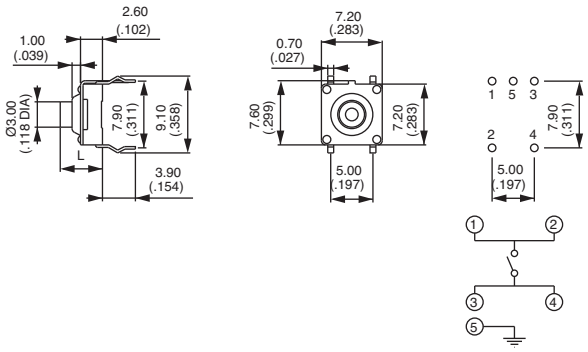

Operating force : 2N ± 0,3N - Travel : 0,50 mm

7,2 x 7,2 mm case - right angle terminals

Model No	Dim. «L»
PHAP3352	4,35 mm
PHAP3352A	8,35 mm
PHAP3352B	12,35 mm

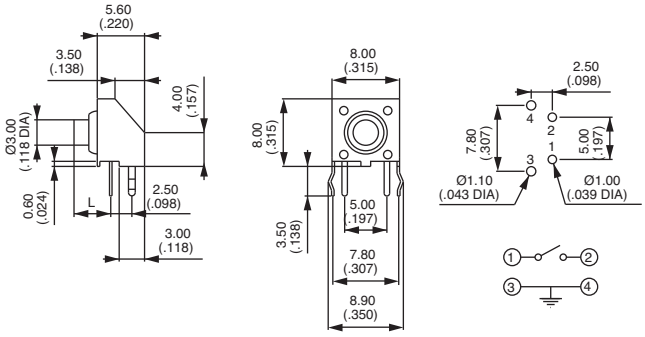

Operating force : 2N ± 0,3N - Travel : 0,50 mm

10 x 10 mm case - straight terminals

Model No
PHAP3353

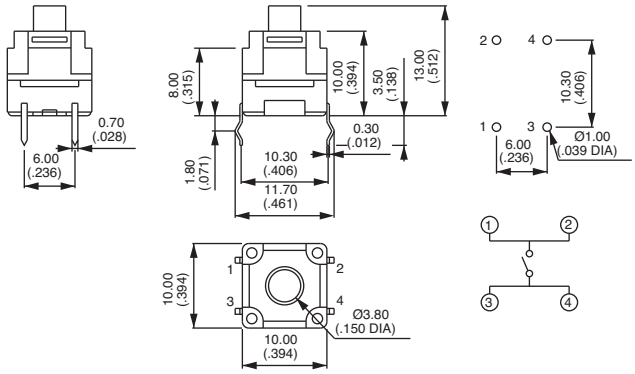

Operating force : 1,6N ± 0,5N - Travel : 0,50 mm

C

PHAP33 series

Through-hole tact switches

12 x 12 mm case

- 4,3 to 12 mm button height from PCB
- Excellent tactile feedback (snap-dome)
- Crimped terminals for direct mounting onto PCB
- Moulded-in terminals for wave soldering
- Caps for model PHAP3321 :

Cap colours : 1 : blue - 2 : black - 3 : green
5 : yellow - 6 : red - 7 : ivory

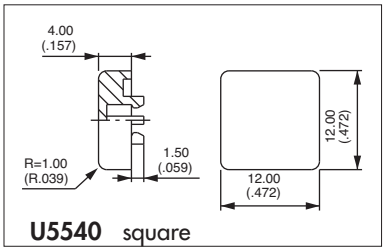

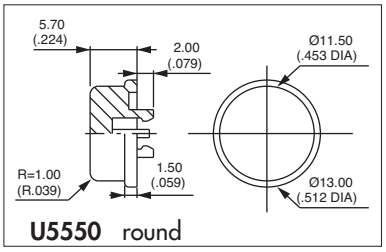

Straight terminals - short actuator

Model No	Dim. «L»
PHAP3320	4,3 mm
PHAP3320A	7,5 mm

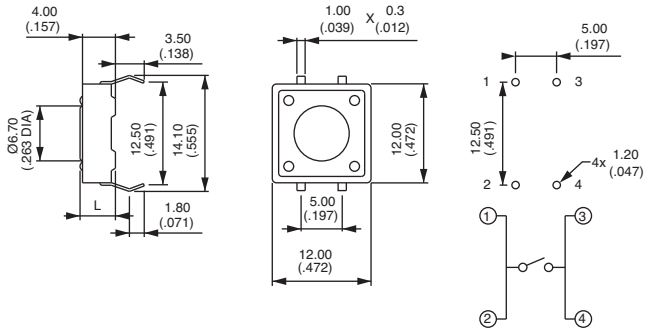

Operating force : 1,6N ± 0,5N - Travel : 0,30 mm

Straight terminals - long keyed actuator

Model No
PHAP3320B

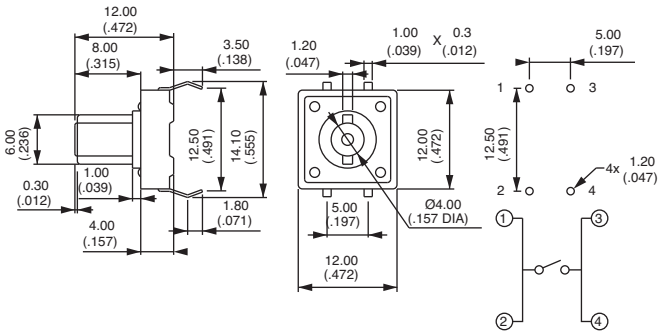

Operating force : 1,6N ± 0,5N - Travel : 0,30 mm

Straight terminals - square actuator

Model No
PHAP3321

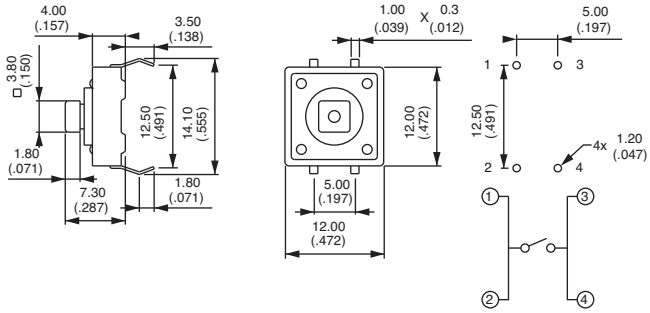

Operating force : 1,6N ± 0,5N - Travel : 0,30 mm

Rocker and paddle switches

Section D

D

SMT TR series

Surface mount tiny washable rocker switches

Distinctive features and specifications

- ❑ **Entirely designed for surface mount**
- ❑ **Tape and reel packaging**
- ❑ **Reflow solderable**
  - High temperature plastic materials
  - Tin plated ground plate
  - Terminal coating : pure tin plating over nickel barrier
  - Terminals turned to the outside, preventing the shadow effect in infrared soldering and permitting visual inspection of solder joints
  - Distance between case and circuit : 0,55 mm (.021)
  - End stackable with 10,16 mm (.40) pitch
  - Available with positioning pins to ensure switch orientation during the reflow process and increasing switch mechanical resistance
- ❑ **Protected against electrostatic discharges (ESD) up to 10 KV**
- ❑ **Washable**
  Construction withstands cleaning processes, including hot water under pressure

D

ELECTRICAL SPECIFICATIONS

- Max. current/voltage rating with resistive load : 0,4VA 20V max. AC or DC
- Minimum load : 10mA 50mV or 10µA 5VDC
- Initial contact resistance : 20 mΩ max
- Insulation resistance : 1.000 MΩ min. at 500VDC
- Dielectric strength : 1.000 Vrms. 50 Hz min. between terminals and frame
  500 Vrms. 50 Hz min. between terminals
- Electrical life at full load :
  - 2 position switches : 60.000 cycles
  - 3 position switches : 30.000 cycles
- Static resistance : 10 KV (Schaffner equipment)

GENERAL SPECIFICATIONS

- Operating temperature : -40°C to +85°C
- Moisture resistance : 21days per IEC 512-6 test 11c
- Vibration resistance : 10-500 Hz / 10 g per IEC 512-4 test 6d
- Shock resistance : 50 g per IEC 512-4 test 6c

MATERIALS

- Case : high temperature plastic material UL94-V0
- Actuator : high temperature plastic rocker
- Ground plate and positioning pins : steel, tin plated
- Contacts : brass, gold plated
- Terminals : brass, with pure tin plating over nickel barrier

SOLDERING AND CLEANING

- Reflow soldering : infrared, vapor phase or infrared convection
- Washable per IEA-RS448-2 :
  - water + detergent - preferred
  - solvents
- Further information on reflow soldering : see end of catalogue.

PACKAGING

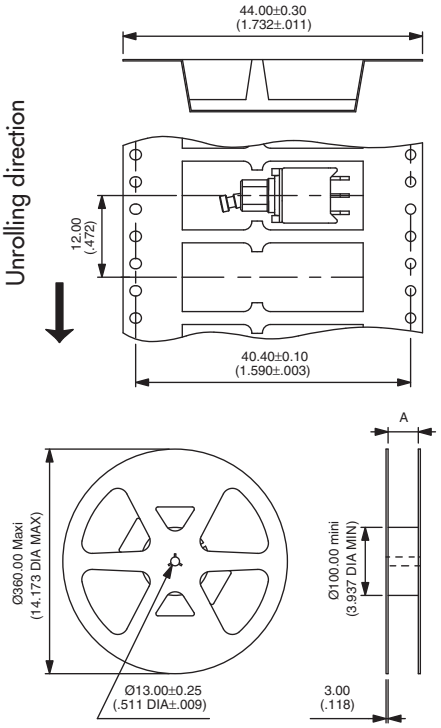

Tape width	24.00 (.944)	44.00 (1.732)
Reel (dimension A)	24.40+2.00/0.00 (.960+.078/.000)	44.40+2.00/0.00 (1.748+.078/.000)

Standard packaging unit : 700 pieces
Tape meeting international standard IEC - Publication 286-3 (EIA481A)
Start leader : 400 mm min.

Dimensions : First dimensions are in mm while inches are shown as bracketed numbers.

The company reserves the right to change specifications without notice.

SMT TR series

Surface mount tiny washable rocker switches

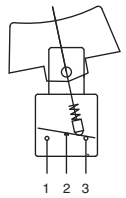

- **With or without positioning pins**
- **Single pole**

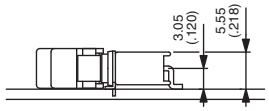

Without positioning pins

	III	II	I
TR36WS80000	ON	-	ON
TR39WS80000	ON	OFF	ON
TR37WS80000	MOM	OFF	MOM
TR38WS80000	ON	OFF	MOM
TR32WS80000	ON	-	MOM

Supplied without rocker.

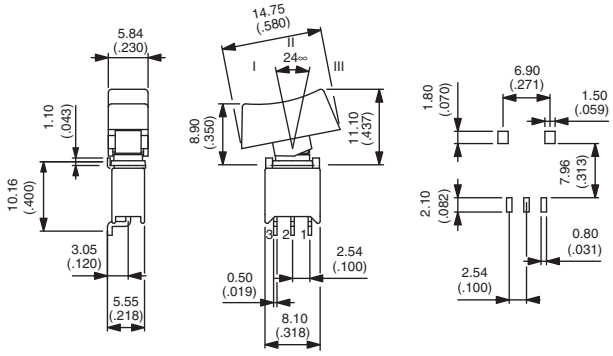

With positioning pins

	III	II	I
TR36WS80065	ON	-	ON
TR39WS80065	ON	OFF	ON
TR37WS80065	MOM	OFF	MOM
TR38WS80065	ON	OFF	MOM
TR32WS80065	ON	-	MOM

Supplied without rocker.

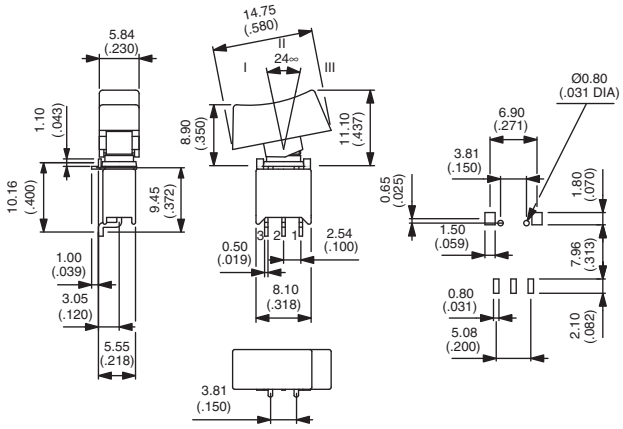

ROCKERS

Order separately.

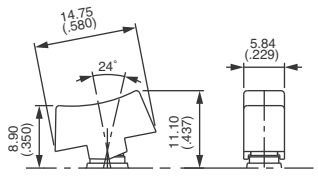

U4700

Rocker colours			
Replace last "0" by number			
1	blue	**5**	yellow
1/4	dark blue	**6**	red
2	black	**7**	ivory
3	green	**7/1**	white
4	grey	**9**	orange

D

TR series

Tiny washable rocker switches

Distinctive features and specifications

- **Sealed**
  - Single piece case
  - O-ring seal between actuator and bushing
  - Epoxy sealed terminals
- **Wide variety of contact materials**
- **Same PCB layout as tiny toggle (TL), pushbutton (TP) and slide switches (TG)**

ELECTRICAL SPECIFICATIONS

- Max. current/voltage rating with resistive load :
  - gold plated contacts : 0,4VA 20V max. AC or DC
  - silver plated contacts : 0,5A 48V max. AC or DC
- Minimum load : 10mA 50mV - 10µA 5VDC
- Contact resistance : 20 mΩ max.
- Insulation resistance : 1.000 MΩ min. at 500VDC
- Dielectric strength :
  1.000 Vrms 50 Hz min. between terminals and frame
  500 Vrms 50 Hz min. between terminals
- Electrical life at full load :

Contacts	Number of cycles	
	2 positions	3 positions
Gold plated	60.000	30.000
Silver plated	20.000	10.000

MATERIALS

- Case : PBT
- Actuator : polyamide
- Contacts and terminals :
  0 : brass, gold plated
  1 : brass, silver plated
  3 : brass, gold plated (1,27 micron gold)
  8 : contact brass, gold plated + tin plated terminals
  9 : contact brass, gold plated (1,27 micron gold) + tin plated terminals
- Terminal seal : epoxy

GENERAL SPECIFICATIONS

- Strength of terminals : pull-out force - 10N max.
- Operating temperature : -30°C to +85°C
- Moisture : 21 days 95 % (NFC 20-603 - IEC 68-2-3)
- Cleaning : solvents or water + detergent
- Wave soldering : 260°C - 5 sec.

The company reserves the right to change specifications without notice.

MODEL STRUCTURE

TR

SERIES

Number of poles

3	Single pole
4	Double pole

Electrical functions

6	ON	-	ON
9	ON	OFF	ON
7	MOM	OFF	MOM
8	ON	OFF	MOM
2	ON	-	MOM

Terminals

P0	Straight PC
Y0	Bracket mounting
W0	Right angle, horizontal mounting
WW	Right angle, vertical mounting
MW	Wire-wrap

OPTIONS

00

Contacts and terminal materials

0	Brass, gold plated
1	Brass, silver plated
3	Brass, gold plated (1,27 micron gold)
8	Contact brass, gold plated + tin plated terminals
9	Contact brass, gold plated (1,27 micron gold) + tin plated terminals (SP only)

Case colour

00	Blue

Special options

00	No special requirement
07	Trimmed terminals - length 3,2 (.125)
08	Extended terminals
18	Switch without ground plate
20	Ground plate with 2 pins
25	Trimmed terminals - length 5 (.196)
30	Wire-wrap on bracket mounting models
50	Crimped ground plate pins

Rockers

10	Small
20	Large

D

ABOUT THIS SERIES
On the following pages, you will find successively :
- model structure of switches
- options in the same order as in above chart

Dimensions : first dimensions are in mm while inches are shown as bracketed numbers.

NOTICE : please note that not all combinations of above numbers are available.
Refer to the following pages for further information.

Packaging unit : 50 pieces.

TR series

Tiny washable rocker switches

MODEL STRUCTURE

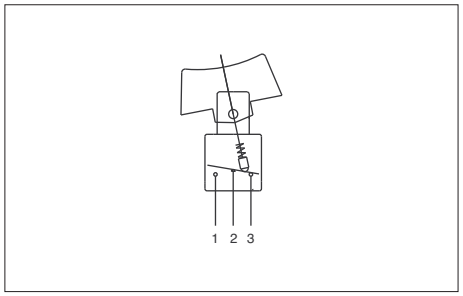

- Straight PC, right angle or wire-wrap terminals
- 1 and 2 pole configurations

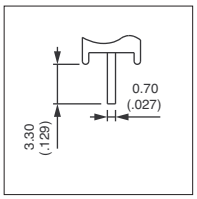

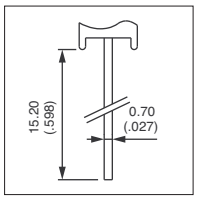

MODEL STRUCTURE

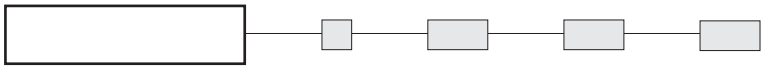

Shown with small rocker (code 10)

D

Straight PC terminals : TR..P0

Single pole	Double pole	III	II	I
TR36P0	**TR46P0**	ON	-	ON
TR39P0	**TR49P0**	ON	OFF	ON
TR37P0	**TR47P0**	MOM	OFF	MOM
TR38P0	**TR48P0**	ON	OFF	MOM
TR32P0	**TR42P0**	ON	-	MOM

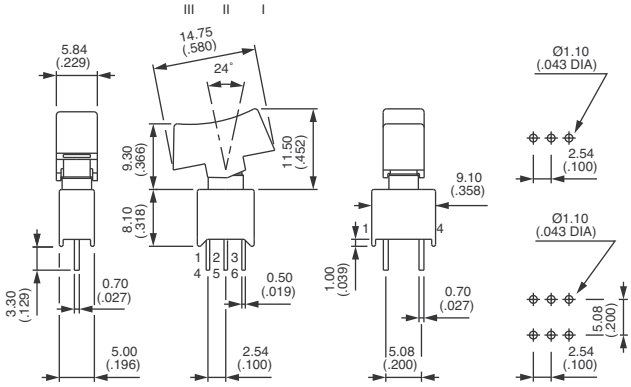

Straight terminals - bracket mounting : TR..Y0

Single pole	Double pole	III	II	I
TR36Y0	**TR46Y0**	ON	-	ON
TR39Y0	**TR49Y0**	ON	OFF	ON
TR37Y0	**TR47Y0**	MOM	OFF	MOM
TR38Y0	**TR48Y0**	ON	OFF	MOM
TR32Y0	**TR42Y0**	ON	-	MOM

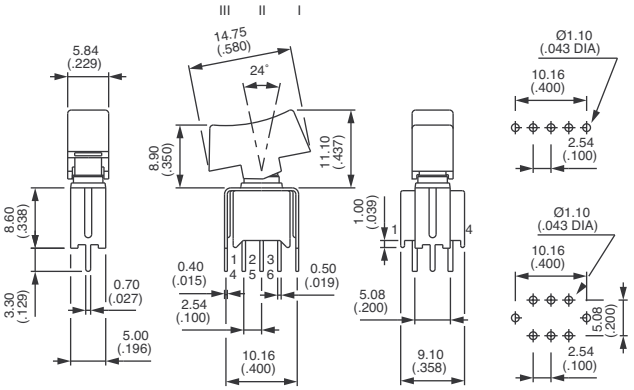

Right angle terminals - horizontal mounting : TR..W0

Single pole	Double pole	III	II	I
TR36W0	**TR46W0**	ON	-	ON
TR39W0	**TR49W0**	ON	OFF	ON
TR37W0	**TR47W0**	MOM	OFF	MOM
TR38W0	**TR48W0**	ON	OFF	MOM
TR32W0	**TR42W0**	ON	-	MOM

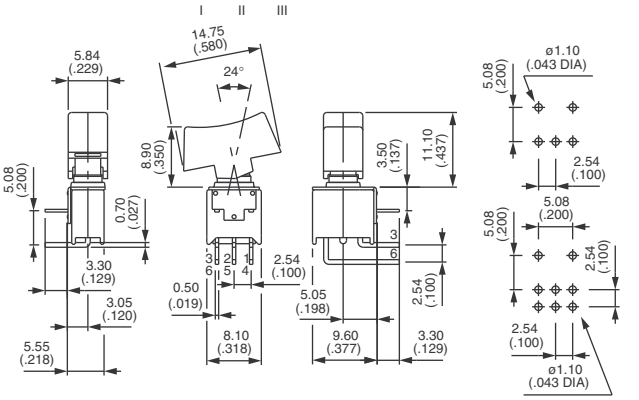

TR series

Tiny washable rocker switches

Right angle terminals - vertical mounting : TR..WW

Single pole	Double pole	III	II	I
TR36WW	**TR46WW**	ON	-	ON
TR39WW	**TR49WW**	ON	OFF	ON
TR37WW	**TR47WW**	MOM	OFF	MOM
TR38WW*	**TR48WW***	ON	OFF	MOM
TR32WW*	**TR42WW***	ON	-	MOM

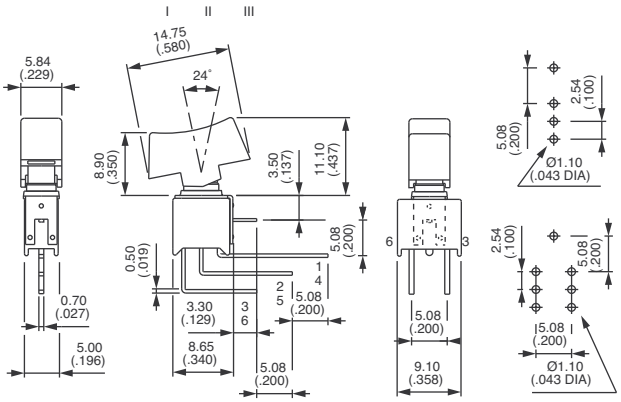

* Functions 2 and 8 : reversed connection available . Consult factory.

Wire-wrap terminals : TR..MW

Single pole	Double pole	III	II	I
TR36MW	**TR46MW**	ON	-	ON
TR39MW	**TR49MW**	ON	OFF	ON
TR37MW	**TR47MW**	MOM	OFF	MOM
TR38MW	**TR48MW**	ON	OFF	MOM
TR32MW	**TR42MW**	ON	-	MOM

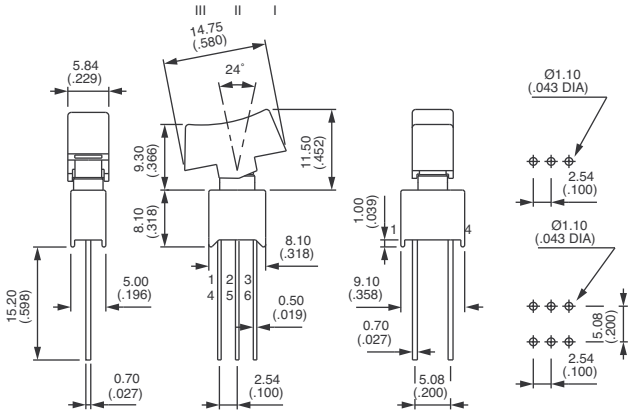

PANEL CUT-OUT

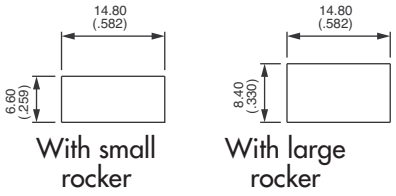

PCB MOUNTING

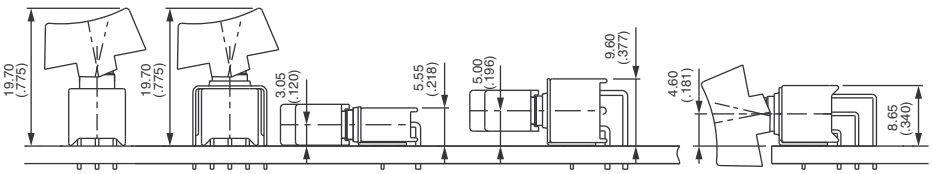

CONTACT AND TERMINAL MATERIALS

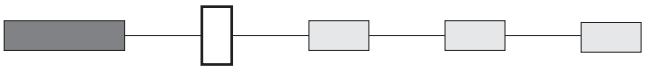

0	Brass, gold plated
1	Brass, silver plated
3	Brass, gold plated (1,27 micron gold)
8	Contact brass, gold plated + tin plated terminals
9	Contact brass, gold plated (1,27 micron gold) + tin plated terminals (single pole only)

CASE COLOUR

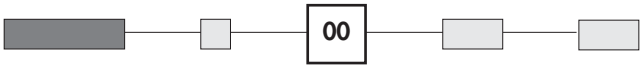

00	Blue

TR series

Tiny washable rocker switches

OPTIONS

SPECIAL OPTIONS

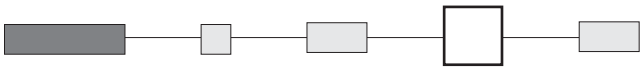

00 No special requirement

07 **Trimmed terminals** - length 3,2 mm (.125) for TR..WW models only

08 **Extended terminals** for TR..W0 models only

18 Switch **without ground plate** for TR..WW models only

20 **Ground plate with 2 pins** for TR..WW models only

25 **Trimmed terminals** - length 5 mm (.196) for all models, except TR..WW

30 **Wire-wrap terminals** on models with mounting **bracket**

50 **Crimping of ground plate pins**.
Retains switch on PCB during handling and wave soldering.
For models TR..W0, TR..WW and TR..Y0 single and double pole.

Marking on rocker : consult factory.

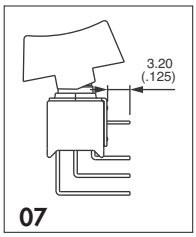

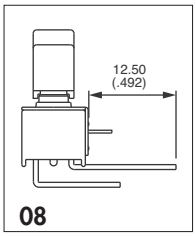

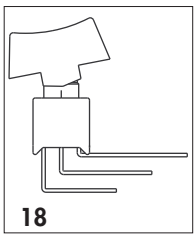

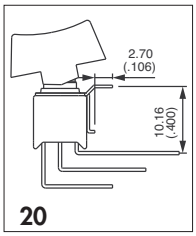

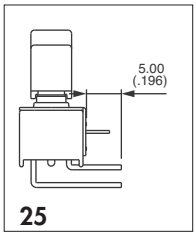

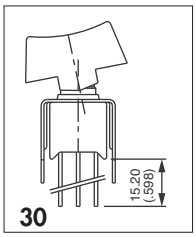

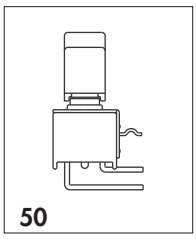

ROCKERS

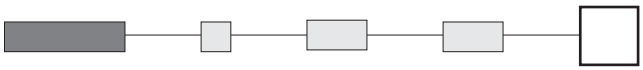

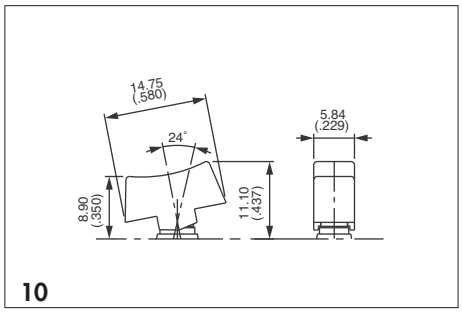

Small

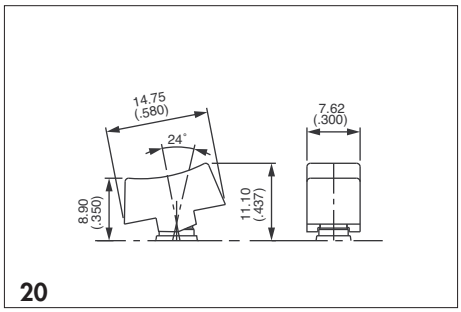

Large

Rocker colours	
Replace "0" by number	
1	blue
1/4	dark blue
2	black
3	green
4	grey
5	yellow
6	red
7	ivory
7/1	white
9	orange

S and SR series

Washable rocker and paddle switches

Distinctive features and specifications

❑ Sealed
- Secure assembly of the two case parts
- Internally sealed bushing
- Epoxy sealed terminals

❑ Process compatible (S series)
- Wave solderable
- Washable

❑ Optional ESD protection

ELECTRICAL SPECIFICATIONS

- Max. current/voltage rating with resistive load :
  - silver contacts (A or 1) : 4A 30VDC
  - brass, gold plated contacts (CD or 0) : 0,4VA 20VAC or DC
  - silver, gold plated contacts (AD or 2) : 4A 30VDC
  (300mA 30VDC for gold plating)
- Initial contact resistance : 10 mΩ max.
- Insulation resistance : 1.000 MΩ min.
- Dielectric strength : 1.000 Vrms 50 Hz min.
- Electrical life with nominal load :

Contacts	Number of cycles	
	2 positions	3 positions
A or 1	40.000	40.000
CD or 0	100.000	50.000
AD or 2	40.000	40.000

MATERIALS

- Case and cover : UL94-V0, polyamide, glass filled or PES
- Actuator : polyamide
- Contacts
  CD or **0** : brass, gold plated
  A or **1** : silver
  AD or **2** : silver, gold plated
- Terminal seal : epoxy

GENERAL SPECIFICATIONS

- Mechanical strength :
  Terminals are strengthened by a bracket or a ground plate ensuring the rigidity of the switch on the board. Actuator strength is 10N max.
- Operating temperature : -20°C to +85°C
- Storage temperature : -40°C to +85°C
- Moisture :
  The insulating materials employed and the complete seal permit the switches to withstand a 56 days moisture test (IEC 68-2-3).
- Soldering - thermal shock (S series only) :
  The switches are especially designed for flow soldering at 260°C during 5 seconds owing to high temperature polymer parts.
- Iron soldering (SR series) : 300°C 5 sec. max.
- Solderability : The switches are tested at 235°C according to IEC 68-2-20 after accelerated aging.

AGENCY APPROVALS

2A 250VAC
4A 125VAC

Availability : consult factory for details of approved models.

Marking : to order switches marked UL, complete appropriate box of ordering format.

D

The company reserves the right to change specifications without notice.

S series

Washable rocker and paddle switches

Overview

MODEL STRUCTURE

S				

SERIES

Terminals

W	Right angle, horizontal mounting
WW	Right angle, vertical mounting
Y	Bracket mounting

Bushing and terminals

2	Terminal spacing 4,7 (.185) or 3,81 (.150)
0	Terminal spacing 5,08 (.200) (SW switches)

Number of poles

3	Single pole
4	Double pole

Electrical functions

6	ON	-	ON
9	ON	OFF	ON
7	MOM	OFF	MOM
8	ON	OFF	MOM
2	ON	-	MOM
4TH	ON	ON	ON

OPTIONS

Contact materials

A	Silver
AD	Silver, gold plated
CD	Brass, gold plated

Lever

-6

For rocker and paddle.

Special options / insulated models

Blank	No special requirement
X653	Vertical right angle with stand-off plate
X1159	Insulated models

See following pages.

Approvals

UL

Availability : Consult factory for details of approved models.

Actuators

Rockers

U620	Large
U730	Small

Paddles

U610	Narrow
U700	Broad

Bezels

For SK models

U1200

U1210 For LED

For SW, SWW and SY models

U4602

ABOUT THIS SERIES

On the following pages, you will find successively :
- model structure of switches
- options in the same order as above

Specifications are on previous page.

Dimensions : first dimensions are in mm while inches are shown as bracketed numbers.

NOTICE : please note that not all combinations of above numbers are available. Refer to the following pages for further information.

Packaging unit : 25 pieces to 50 pieces depending on models.

S series

Washable rocker and paddle switches

MODEL STRUCTURE

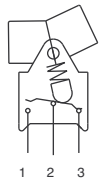

- Straight PC or right angle terminals
- Models with snap-in mounting (SK)
- Terminal spacing 4,7 (.185) or 5,08 (.200) on SW switches
- 1 and 2 pole configurations

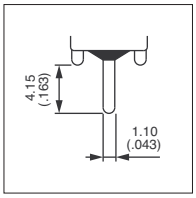

MODEL STRUCTURE

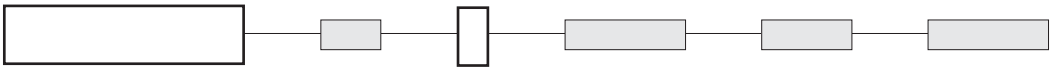

Shown with rocker U620

Right angle terminals - horizontal - spacing 4,7 (.185)

Single pole	Double pole	III	II	I
SW236-6	**SW246-6**	ON	-	ON
SW239-6	**SW249-6**	ON	OFF	ON
SW237-6	**SW247-6**	MOM	OFF	MOM
SW238-6	**SW248-6**	ON	OFF	MOM
SW232-6	**SW242-6**	ON	-	MOM
	SW244TH-6*	ON	ON	ON

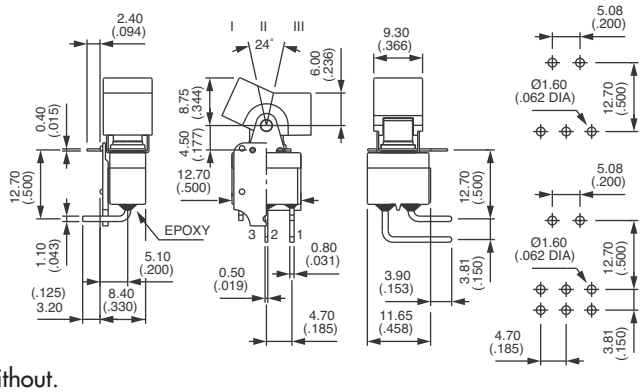

Single pole with stand-off plate, double pole without.

Right angle terminals - vertical

Single pole	Double pole	III	II	I
SWW236-6	**SWW246-6**	ON	-	ON
SWW239-6	**SWW249-6**	ON	OFF	ON
SWW237-6	**SWW247-6**	MOM	OFF	MOM
SWW238-6	**SWW248-6****	ON	OFF	MOM
SWW232-6	**SWW242-6****	ON	-	MOM
	SWW244TH-6*	ON	ON	ON

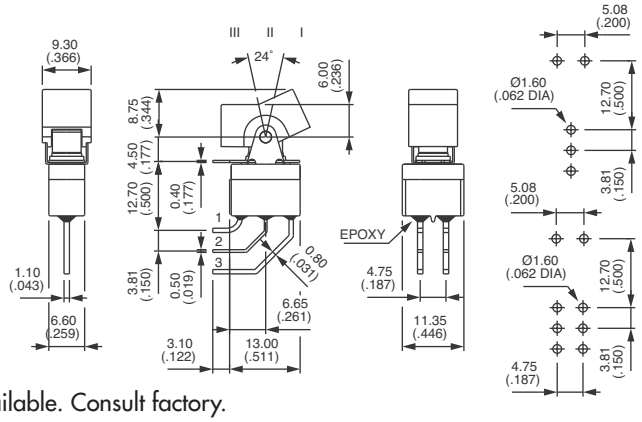

** Functions 2 and 8 : reversed connection available. Consult factory.

Bracket mounting

Single pole	Double pole	III	II	I
SY236-6	**SY246-6**	ON	-	ON
SY239-6	**SY249-6**	ON	OFF	ON
SY237-6	**SY247-6**	MOM	OFF	MOM
SY238-6	**SY248-6**	ON	OFF	MOM
SY232-6	**SY242-6**	ON	-	MOM
	SY244TH-6*	ON	ON	ON

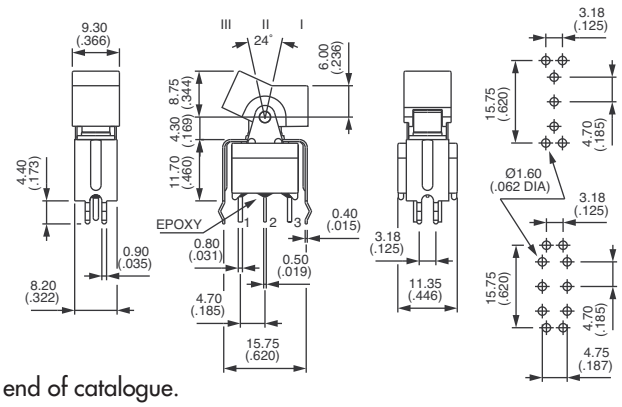

* Function 4 : SP in DP case - TH connection, see end of catalogue.

D

S series

Washable rocker and paddle switches

MODEL STRUCTURE

Right angle terminals - horizontal - spacing 5,08 (.200)

Single pole	Double pole	III	II	I
SW036-6	**SW046-6**	ON	-	ON
SW039-6	**SW049-6**	ON	OFF	ON
SW037-6	**SW047-6**	MOM	OFF	MOM
SW038-6	**SW048-6**	ON	OFF	MOM
SW032-6	**SW042-6**	ON	-	MOM
	SW044TH-6*	ON	ON	ON

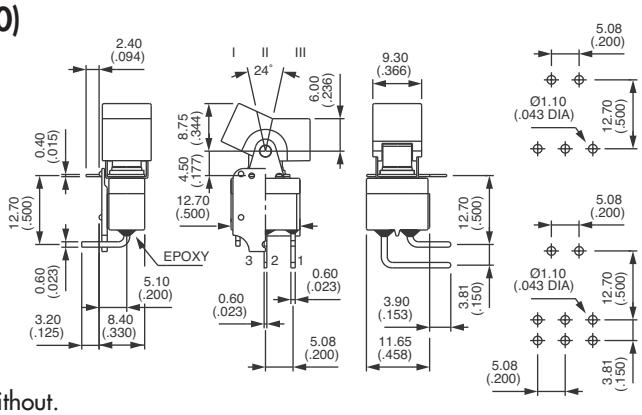

Single pole with stand-off plate, double pole without.

Straight PC terminals - snap-in mounting

Shown with rocker U730 and bezel U1200

Single pole	Double pole	III	II	I
SK236-6	**SK246-6**	ON	-	ON
SK239-6	**SK249-6**	ON	OFF	ON
SK237-6	**SK247-6**	MOM	OFF	MOM
SK238-6	**SK248-6**	ON	OFF	MOM
SK232-6	**SK242-6**	ON	-	MOM
	SK244TH-6*	ON	ON	ON

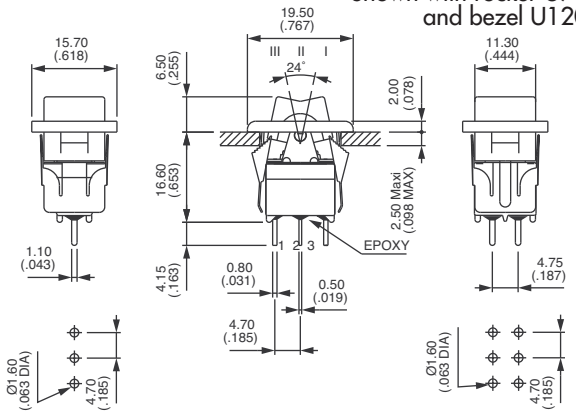

* Function 4 : SP in DP case - TH connection, see end of catalogue.

PANEL CUT-OUT

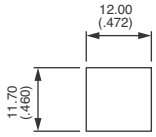

With rocker **U730** or paddle **U700**

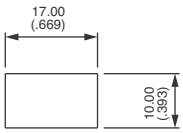

With rocker **U620** or paddle **U610**

For SK only

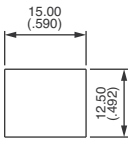

CONTACT MATERIALS

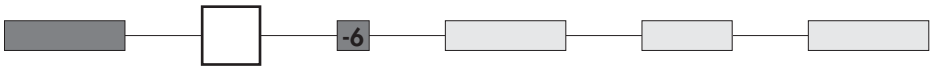

A Silver
AD Silver, gold plated
CD Brass, gold plated

SPECIAL OPTIONS / INSULATED MODELS

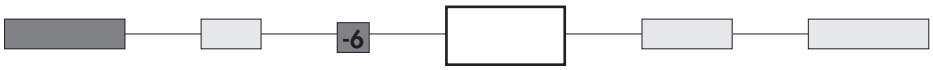

X653 Vertical right angle **with stand-off plate**

Shown with rocker U620

	III	II	I
Single pole			
SWW236-6 X653	ON	-	ON
SWW239-6 X653	ON	OFF	ON
SWW237-6 X653	MOM	OFF	MOM
SWW238-6 X653	ON	OFF	MOM
SWW232-6 X653	ON	-	MOM
Double pole			
SWW246-6 X653	ON	-	ON
SWW249-6 X653	ON	OFF	ON
SWW247-6 X653	MOM	OFF	MOM
SWW248-6 X653**	ON	OFF	MOM
SWW242-6 X653**	ON	-	MOM
SWW244TH-6 X653*	ON	ON	ON

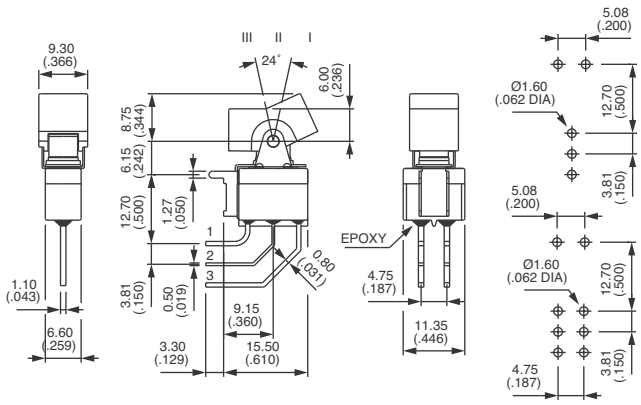

* Function 4 : SP in DP case - TH connection, see end of catalogue.
** Functions 2 and 8 : reversed connection available. Consult factory.

X601 Silver plated brass contacts
Current/voltage rating for an electrical life of 20.000 cycles : 0,5A 30VDC
Minimum quantity : 5.000 per type and shipment.

SPECIAL OPTIONS / INSULATED MODELS (continued)

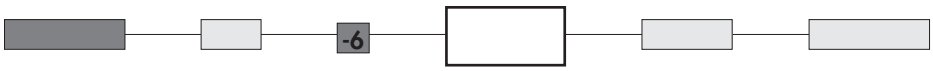

X1159 **Insulated model** protected against E.S.D. up to 12 KV - **Horizontal right angle**

	III	II	I
Single pole			
SW236-6 X1159	ON	-	ON
SW239-6 X1159	ON	OFF	ON
SW237-6 X1159	MOM	OFF	MOM
SW238-6 X1159	ON	OFF	MOM
SW232-6 X1159	ON	-	MOM
Double pole			
SW246-6 X1159	ON	-	ON
SW249-6 X1159	ON	OFF	ON
SW247-6 X1159	MOM	OFF	MOM
SW248-6 X1159	ON	OFF	MOM
SW242-6 X1159	ON	-	MOM
SW244TH-6 X1159*	ON	ON	ON

Shown with rocker U620

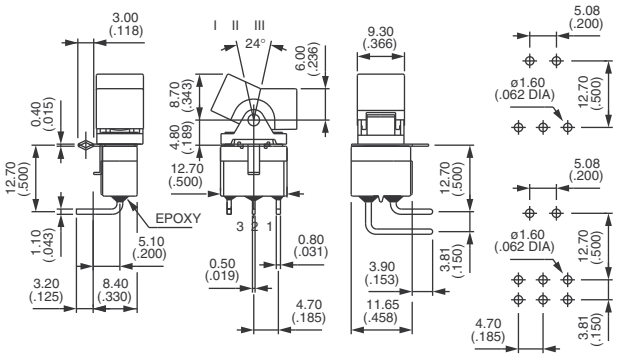

X1159 **Insulated model** protected against E.S.D. up to 12 KV - **Vertical right angle**

	III	II	I
Single pole			
SWW236-6 X1159	ON	-	ON
SWW239-6 X1159	ON	OFF	ON
SWW237-6 X1159	MOM	OFF	MOM
SWW238-6 X1159	ON	OFF	MOM
SWW232-6 X1159	ON	-	MOM
Double pole			
SWW246-6 X1159	ON	-	ON
SWW249-6 X1159	ON	OFF	ON
SWW247-6 X1159	MOM	OFF	MOM
SWW248-6 X1159**	ON	OFF	MOM
SWW242-6 X1159**	ON	-	MOM
SWW244TH-6 X1159*	ON	ON	ON

Shown with rocker U620

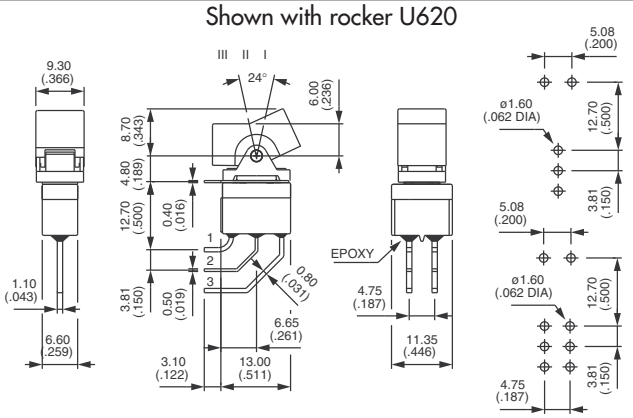

X1159 **Insulated model** protected against E.S.D. up to 12 KV - **Straight PC terminals - bracket mounting**

	III	II	I
Single pole			
SY236-6 X1159	ON	-	ON
SY239-6 X1159	ON	OFF	ON
SY237-6 X1159	MOM	OFF	MOM
SY238-6 X1159	ON	OFF	MOM
SY232-6 X1159	ON	-	MOM
Double pole			
SY246-6 X1159	ON	-	ON
SY249-6 X1159	ON	OFF	ON
SY247-6 X1159	MOM	OFF	MOM
SY248-6 X1159**	ON	OFF	MOM
SY242-6 X1159**	ON	-	MOM
SY244TH-6 X1159*	ON	ON	ON

Shown with rocker U620

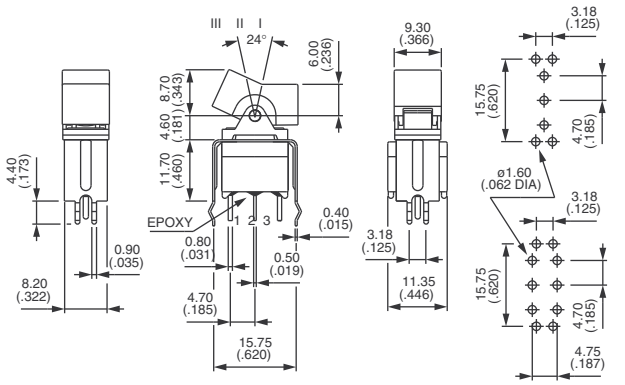

* Function 4 : SP in DP case - TH connection, see end of catalogue. ** Functions 2 and 8 : reversed connection available. Consult factory.

Above models available with all actuators shown on next page.

AGENCY APPROVAL

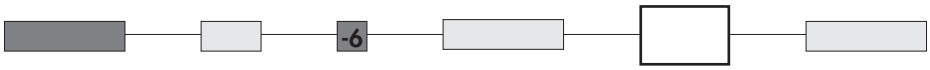

UL

Availability : consult factory for details of approved models.

Marking : to order switches marked with the UL symbol, complete above box with "UL".
Blank : no agency approval required.

ACTUATORS

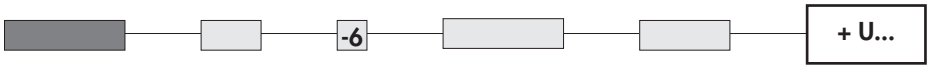

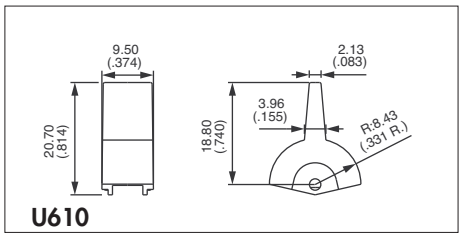

U610

Narrow paddle

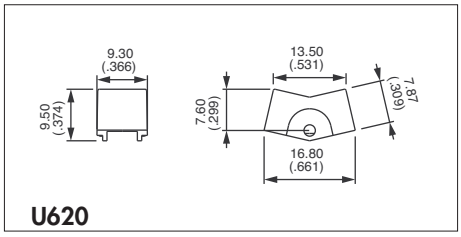

U620

Large rocker

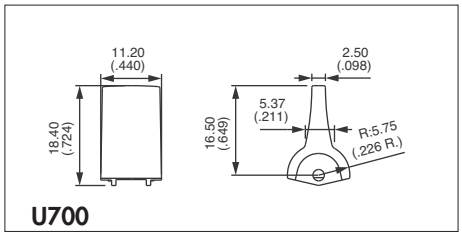

U700

Broad paddle

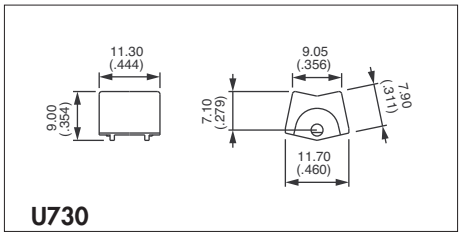

U730

Small rocker

Actuator colours	
Replace last "0" by number	
1	blue
1/4	dark blue
2	black
3	green
4	grey
5	yellow
6	red
7	ivory
7/1	white
9	orange

U610 and U620 not available on SK models

Bezels for SK model (snap-in)
Add bezel part number to actuator part number.

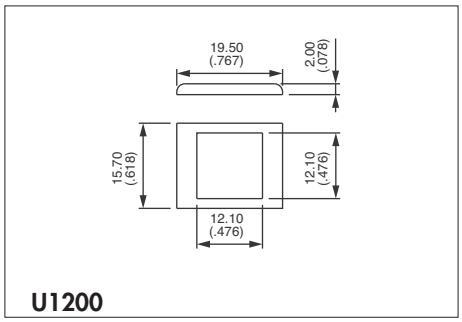

U1200

Bezel

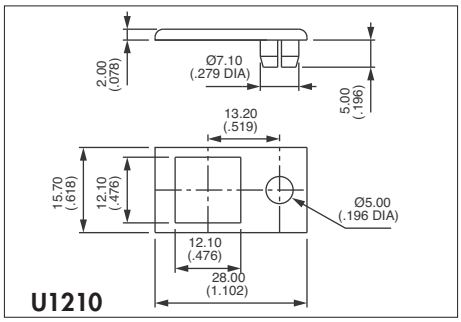

U1210

Bezel for LED Ø 5 (.196) - not supplied

Bezel for SW - SWW and SY models

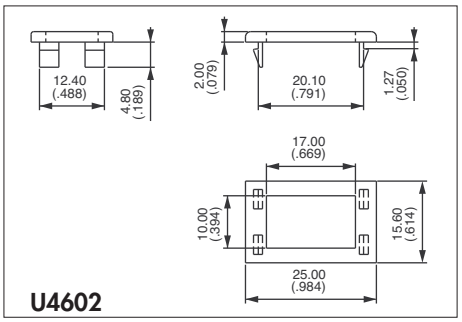

U4602

Black bezel - for rocker U620 only

SR series

Washable rocker and paddle switches

Overview

MODEL STRUCTURE

SR			
SERIES	Number of poles	Electrical functions	Terminals

Number of poles

3	Single pole
4	Double pole

Electrical functions

6	ON	-	ON
9	ON	OFF	ON
7	MOM	OFF	MOM
8	ON	OFF	MOM
2	ON	-	MOM
4	ON	ON	ON

Terminals

S0	Solder lug

OPTIONS

Contact materials

0	Brass, gold plated
1	Silver
2	Silver, gold plated
5	Special contact : lower rating, minimum quantity : consult factory

Mounting plate

00	Standard plate
01	Standard plate + accessories

Model

00	Standard

Actuators

10	Rocker
20	Paddle

ABOUT THIS SERIES

On the following pages, you will find successively :
- model structure of switches
- options in the same order as above

Specifications are at the beginning of this section (S and SR series).

Dimensions : first dimensions are in mm while inches are shown as bracketed numbers.

Packaging unit : 20 pieces.

SR series

Washable rocker and paddle switches

Solder lug terminals

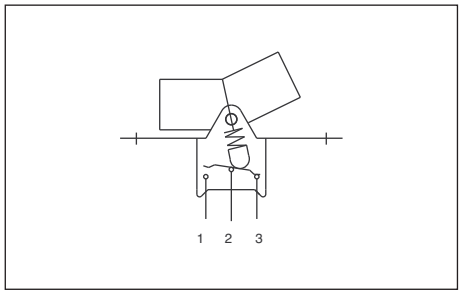

- 1 and 2 pole configurations
- Iron soldering 300°C max. 5 seconds max.

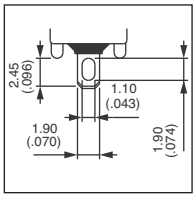

MODEL STRUCTURE

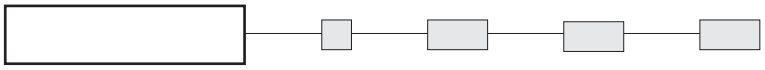

Shown with standard mounting plate (code 00)

Solder lug terminals

Single pole	Double pole	III	II	I
SR36S0	**SR46S0**	ON	-	ON
SR39S0	**SR49S0**	ON	OFF	ON
SR37S0	**SR47S0**	MOM	OFF	MOM
SR38S0	**SR48S0**	ON	OFF	MOM
SR32S0	**SR42S0**	ON	-	MOM
	SR44S0*	ON	ON	ON

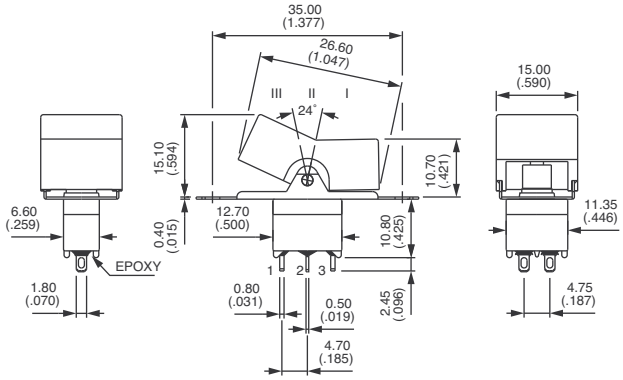

* Function 4 : SP in DP case - TH connection, see end of catalogue.

PANEL CUT-OUT

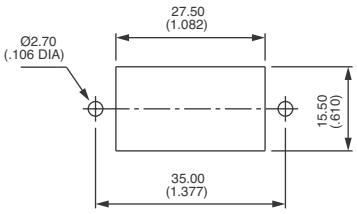

SR series

Washable rocker and paddle switches

OPTIONS

CONTACT MATERIALS

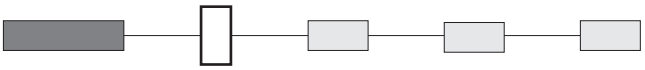

0	Brass, gold plated
1	Silver
2	Silver, gold plated
5	Special contact, lower rating, minimum quantity : consult factory.

MOUNTING PLATE

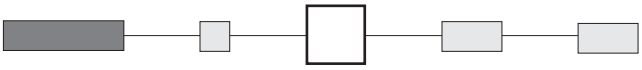

00 Standard mounting plate

01 Standard mounting plate + mounting accessories (spacers, screws and nuts)

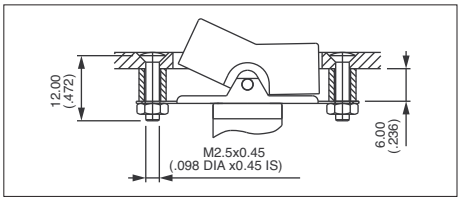

D

ACTUATORS

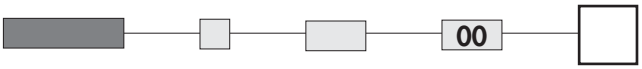

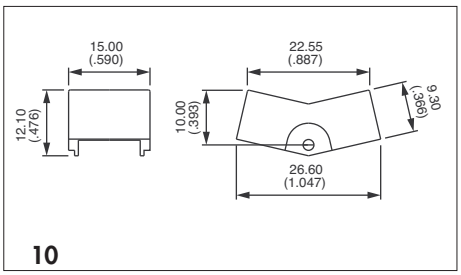

Rocker

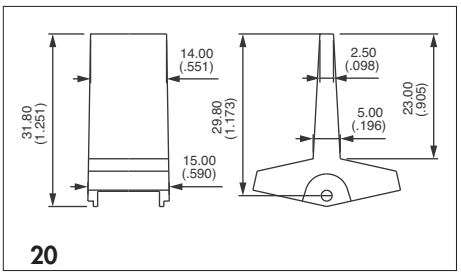

Paddle

Actuator colours	
Replace "0" by number	
1	blue
1/4	dark blue
2	black
3	green
4	grey
5	yellow
6	red
7	ivory
7/1	white
9	orange

- ❑ **Double insulation**
- ❑ **Epoxy sealed terminals**
- ❑ **UL and CSA approved**

ELECTRICAL AND GENERAL SPECIFICATIONS

- Max. current/voltage rating with resistive load :
  - silver contacts (code 1) and gold plated silver contacts (code 2) : 4A 30VDC
  - gold plated brass contacts (code 0) : 0,4VA 20V AC or DC
- Initial contact resistance : 10 mΩ max.
- Insulation resistance : 10.000 MΩ min.
- Dielectric strength :
  1.000 Vrms 50 Hz min. between terminals
  4.000 Vrms 50 Hz min. between terminals and metal panel
- Electrical life : 50.000 cycles
- Panel thickness : 1 (.039) to 3 mm (.118) max.
- Operating temperature : -40°C to +85°C

MATERIALS

- Case : PES
- Actuator : polyamide
- Contacts
  0 : brass, gold plated
  1 : silver
  2 : silver, gold plated
  5 : special contact, lower rating
  Minimum quantity : consult factory.
- Terminal seal : epoxy

APPROVALS

2A 250VAC
4A 125VAC

Availability : consult factory for details or approved models.

Marking : to order switches marked with above approvals, complete last box of ordering format.

ABOUT THIS SERIES

Dimensions : first dimensions are in mm while inches are shown as bracketed numbers.

Packaging unit : 50 pieces.

The company reserves the right to change specifications without notice.

D

AS series

Snap-in rocker switches

MODEL STRUCTURE

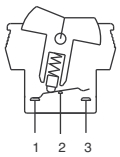

- Black body
- Single pole configuration

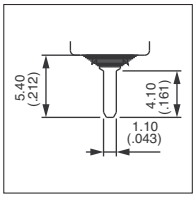

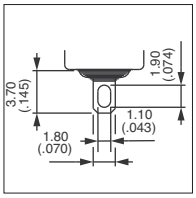

MODEL STRUCTURE

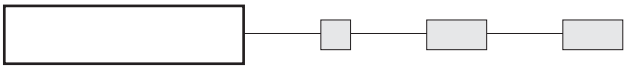

Solder lug terminals

	III	II	I
AS36S0	ON	-	ON
AS39S0	ON	OFF	ON
AS37S0	MOM	OFF	MOM
AS38S0	ON	OFF	MOM
AS32S0	ON	-	MOM

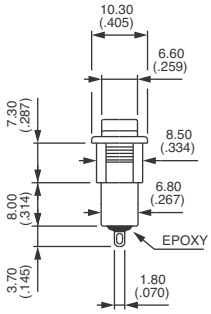

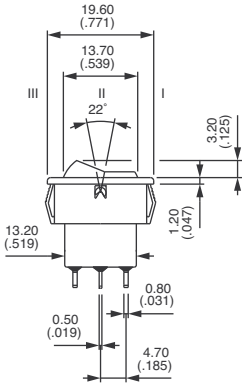

Straight PC terminals

	III	II	I
AS36P0	ON	-	ON
AS39P0	ON	OFF	ON
AS37P0	MOM	OFF	MOM
AS38P0	ON	OFF	MOM
AS32P0	ON	-	MOM

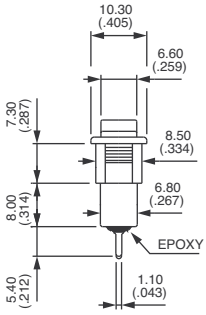

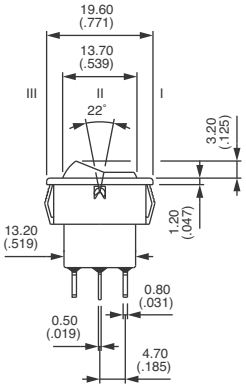

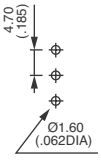

PANEL CUT-OUT

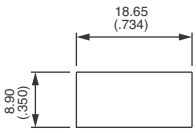

CONTACT MATERIALS

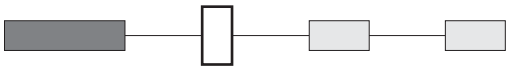

0	Brass, gold plated
1	Silver
2	Silver, gold plated
5	Special contact, lower rating Minimum quantity. Consult factory

ACTUATORS

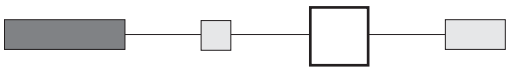

00	Black
01	Red
02	Grey
03	Blue
04	Ivory
07	White
09	Dark blue

For marking on actuator, consult factory.

OTHER OPTIONS

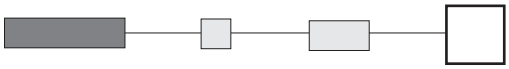

10 With **UL-CSA** marking

20 **10 mm (.393)** long straight PC terminals

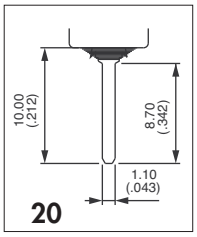

MT series

Sealed selector switches

Distinctive features - Specifications

- ❑ **Environmentally sealed selector switch (IP68)**
- ❑ **Multiple single functions available**
- ❑ **Various contact materials that allow usage from dry circuit applications up to 4A**

ELECTRICAL AND GENERAL SPECIFICATIONS

- Max. current/voltage rating with resistive load :
  - Silver contacts (A) : 4A 30VDC
  - Gold plated silver contacts (AD) : 4A 30VDC (gold plating withstands up to 100mA 30VDC)
  - Gold plated brass contacts (CD) : 0,4VA 20VAC or DC
- Minimal load :
  - A contacts : 50mA 10VDC
  - AD and CD contacts : 10mA 50mV - 10µA 5V
- Initial contact resistance : 10mΩ max.
- Insulation resistance : 1.000 MΩ min. at 500VDC
- Dielectric strength : 1.000 Vrms 50Hz min. between terminals
  1.500 Vrms 50Hz min. between terminals and frame
- Contact bounce : 2ms max.
- Electrical life at full load : 50.000 cycles
- Low level or mechanical life : 100.000 cycles
- Panel thickness : 11,5 mm (.452) max.
- Operating temperature : -40°C to +85°C

MATERIALS

- Actuator : 6/6 nylon
- Bushing : brass, chrome plated
- Contacts :
  A : silver
  AD : silver, gold plated
  CD : brass, gold plated
- Terminal seal : epoxy

D

Dimensions : First dimensions are in mm while inches are shown as bracketed numbers.

Mounting accessories : Standard hardware supplied : 1 hex nut 20.64 mm (.813) across flats and 1 sealing gasket.

Packaging unit : 25 pieces or 50 pieces depending on model

The company reserves the right to change specifications without notice.

MT					
SERIES	Bushing finish	Electrical functions	Terminals	Contact materials	Actuator colour

Bushing finish

Blank	Bright chrome
G	Matt black (std)

Terminals

1	Straight PC
2	Solder lug

Actuator colour

2	Black

Other : on request.

Electrical functions

6	ON	-	ON
9	ON	OFF	ON
7	MOM	OFF	MOM
8	ON	OFF	MOM
2	ON	-	MOM

Contact materials

A	Silver
AD	Gold plated silver
CD	Gold plated brass

TERMINALS

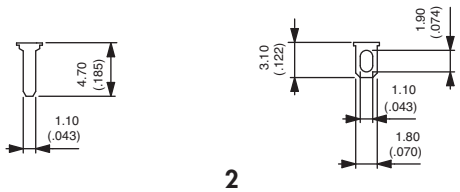

PANEL CUT-OUT

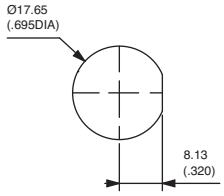

Sealed selector with straight PC terminals

→ Flat

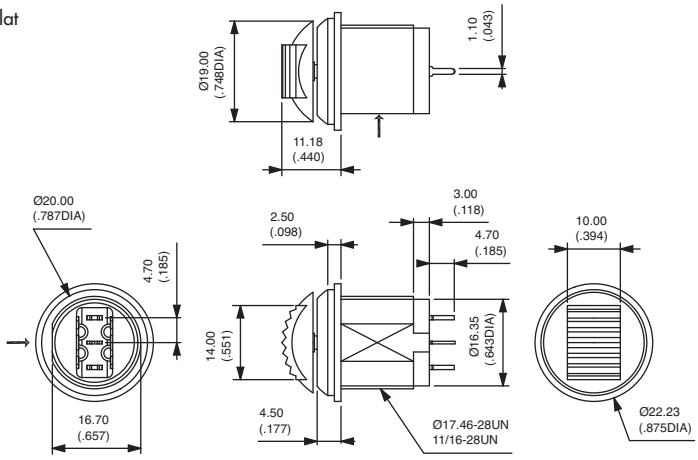

To order a product, select the desired codes in the above overview.

7000 series

Rocker and paddle switches

Distinctive features

For full series information, please visit our website.

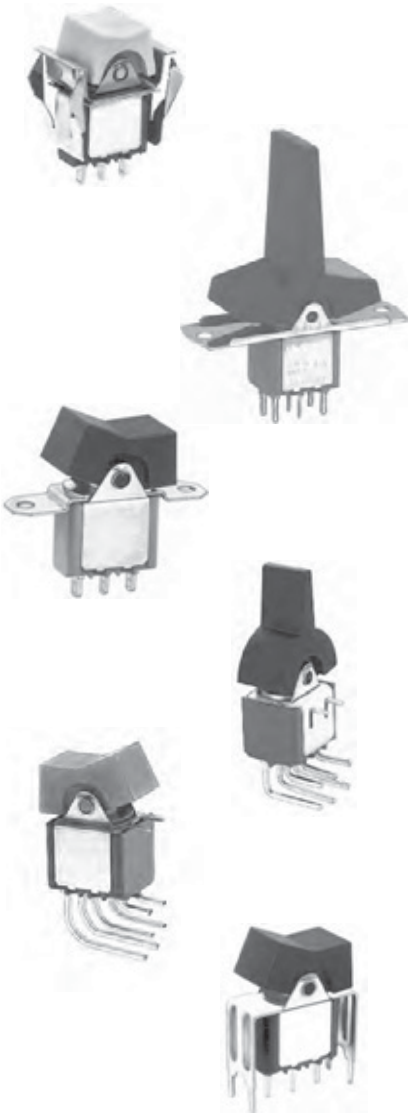

- **Wide variety of actuators**
  Rockers and paddles in different sizes
  Available in10 different colours
  Two bezel types

- **4 terminal types**
  Solder lugs
  Quick-connect terminals
  Straight or right angle PC terminals

- **Many mounting styles for panel or PCB**
  Snap-in
  By plate and screw
  PCB mounting with or without bracket

- **4 contact materials**
  Silver and gold plated silver
  Gold plated and silver plated brass

- **8 electrical functions, maintained or momentary**

- **UL and CSA approved - for VDE refer to 57000**

D

The company reserves the right to change specifications without notice.

ELECTRICAL SPECIFICATIONS

- Current/voltage rating with resistive load :

Contact	Maximum	Minimum	Level *
Silver A	4A 30VDC	50mA 10VDC	III and IV
Silver, gold plated AD	4A 30VDC Gold plating withstands up to 100mA 30VDC.	10mA 50mV 10µA 5V	I to IV
Brass, gold plated CD	0,4 VA at 20VAC or DC	10mA 50mV 10µA 5V	I and II

- For inductive, lamp or capacitive loads, consult factory.
- Initial contact resistance : 10 mΩ
- Insulation resistance : 1.000 MΩ min. at 500VDC
- Dielectric strength :
  1.000 Vrms 50 Hz min. between terminals
  1.500 Vrms 50 Hz min. between poles
  1.500 Vrms 50 Hz min. between terminals and frame
- Contact bounce : 2 ms max.
- Electrical life : 50.000 cycles at full load

* For details, see technical information, end of catalogue.

MATERIALS

- Case : diallylphthalate (DAP) or high temperature plastic material (UL94-V0)
- Actuator : polyamide
- Housing : stainless steel or steel tin plated
- Bracket : steel, tin plated
- Contacts
  A : silver
  AD : silver, gold plated
  CD : brass, gold plated
- Terminal seal : epoxy

GENERAL SPECIFICATIONS

- Low level or mechanical life : 100.000 cycles
- Panel thickness : 1 (.039) to 2,5 mm(.098)
- Operating temperature : -40°C to +85°C

AGENCY APPROVALS

3A 250VAC
6A 125VAC

For VDE, refer to 57000 series.

Availability : consult factory for details of approved models.

Marking : to order switches marked UL or CSA, complete appropriate box of ordering format.

D

57000 series

VDE approved rocker and paddle switches

MODEL STRUCTURE

EN 61058-1

- The switches described below are standard marked VDE.
- UL and CSA agency approvals are also available. To order a switch marked UL or CSA, please complete "Agency approvals" box.

ELECTRICAL SPECIFICATIONS

- Class I (normal insulation)
- Small contact opening : µ (< 3 mm (.118))
- Current/voltage rating with resistive load : 3A 250VAC - 6A 125 VAC
- Dielectric strength :
  2.000 Vrms 50 Hz min. between poles and between terminals and frame
  1.000 Vrms 50 Hz min. between terminals
- Special body for increased creepage distance and air gap : 3 mm (.118)

Further specifications, see 7000 series.

MATERIALS

- Contacts : silver
- Case : diallylphthalate (DAP)
- Actuators : polyamide
- Housing : stainless steel or steel tin plated
- Terminal seal : epoxy

D

MODEL STRUCTURE

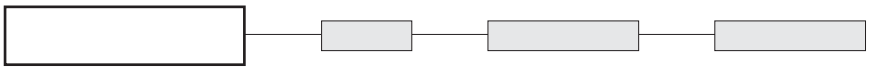

Shown with rocker U530

Panel mounting - solder lug terminals - large rocker or paddle

		III	II	I
		2-3		1-2
		5-6		4-5
Single pole	Double pole			
57736A	**57746A**	ON	-	ON
57739A	**57749A**	ON	OFF	ON

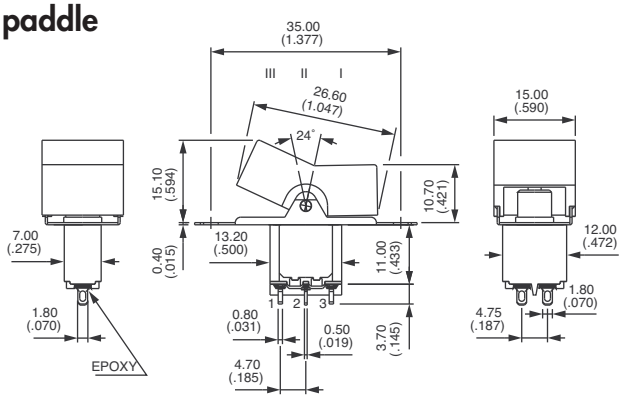

Panel mounting - straight PC terminals - large rocker or paddle

		III	II	I
		2-3		1-2
		5-6		4-5
Single pole	Double pole			
57936A	**57946A**	ON	-	ON
57939A	**57949A**	ON	OFF	ON

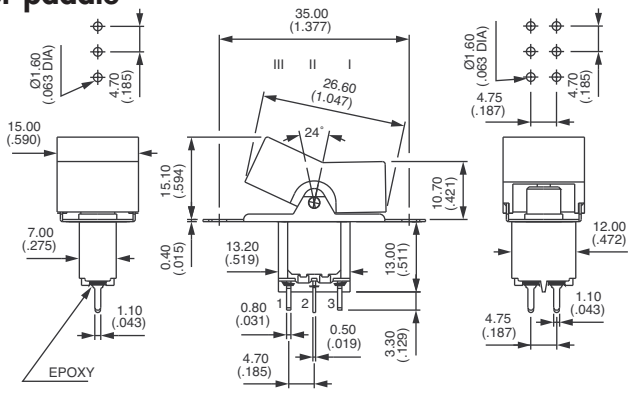

The company reserves the right to change specifications without notice.

57000 series

VDE approved rocker and paddle switches

Shown with rocker U620

Panel mounting - solder lug terminals - small or medium rocker or paddle

		III	II	I
		2-3 5-6		1-2 4-5
Single pole	Double pole			
57736NA	**57746NA**	ON	-	ON
57739NA	**57749NA**	ON	OFF	ON

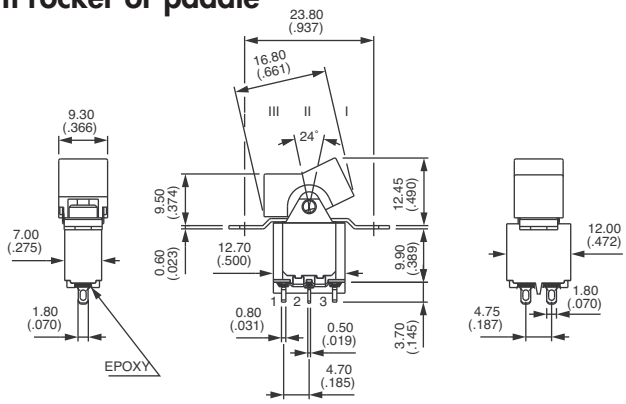

Panel mounting - straight PC terminals - small or medium rocker or paddle

		III	II	I
		2-3 5-6		1-2 4-5
Single pole	Double pole			
57936NA	**57946NA**	ON	-	ON
57939NA	**57949NA**	ON	OFF	ON

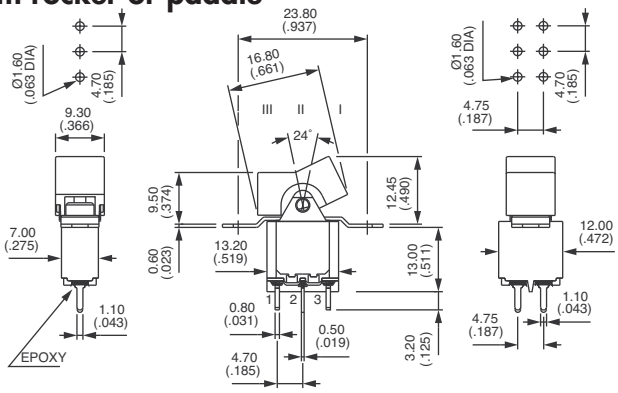

Right angle terminals - horizontal

		III	II	I
		2-3 5-6		1-2 4-5
Single pole	Double pole *			
57936WA	**57946WAX433**	ON	-	ON
57939WA	**57949WAX433**	ON	OFF	ON

Also available for VERTICAL mounting (on request).

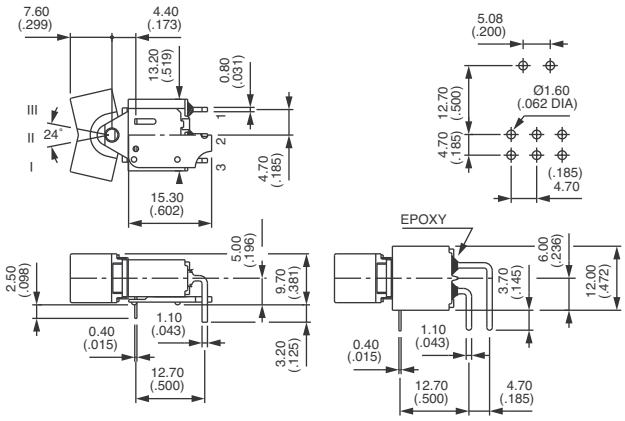

PANEL CUT-OUT : Refer to 7000 series

* In double pole W models, spacing between poles on PCB is different from standard : 4,70 mm (.185) instead of 3,81 mm (.150). Part number X433.

57000 series

VDE approved rocker and paddle switches

OPTIONS

AGENCY APPROVALS

VDE
VDEUL
VDEULCSA

Complete above box with desired approvals.

ACTUATORS

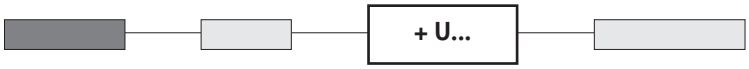

For 57000A models

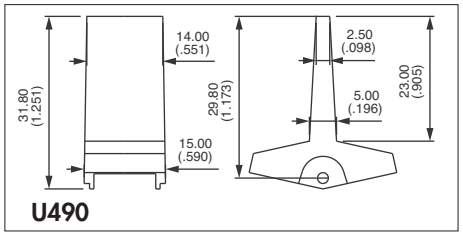

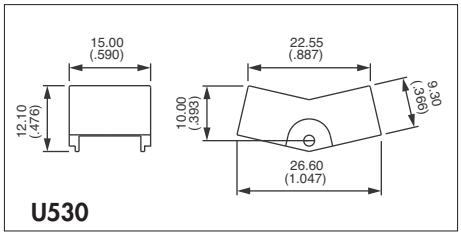

For 57000NA and 57000WA models

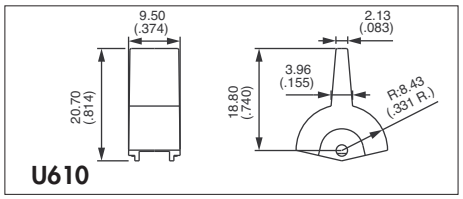

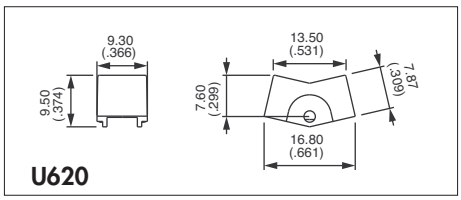

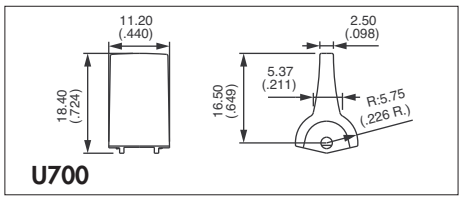

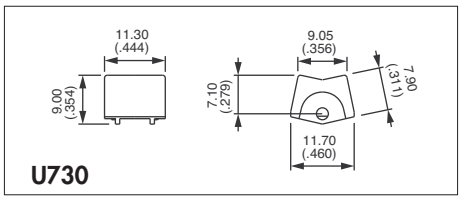

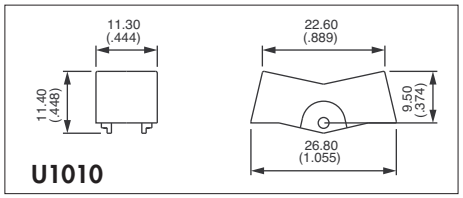

For 57000WA, available on double pole only

Actuator colours	
Replace last "0" by number	
1	blue
1/4	dark blue
2	black
3	green
4	grey
5	yellow
7	ivory
7/1	white
9	orange

D

MOUNTING ACCESSORIES

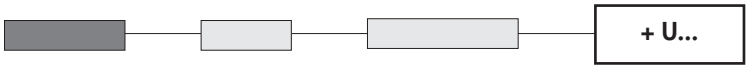

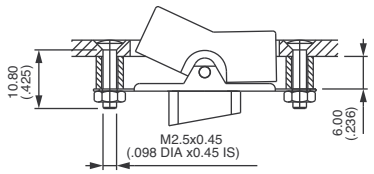

U543 - Spacers, screws and nuts

For rocker U530 or paddle U490

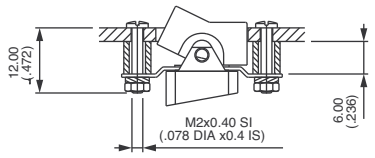

U1022 - Spacers, screws, nut and washers

For rockers U620 or U730
For paddles U610 or U700

MOUNTING RECOMMENDATIONS

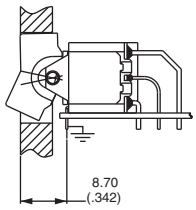

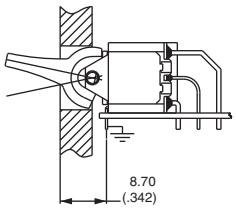

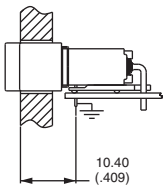

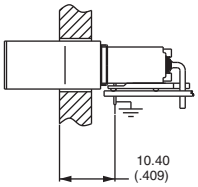

FM series

Snap-in rocker switches - panel cut-out 19 x 13 (.750 x .508)

Distinctive features and specifications

- ❑ **Illuminated and non-illuminated**
- ❑ **For class II appliances**
- ❑ **VDE and UL approved**
- ❑ **Protection against moisture by double-shell case**

When the switch is submitted to moisture (drops, condensation), the double-shell case conducts the liquid outside, thus protecting the contact area and terminals. The light dripping inside the equipment resulting from this should be evacuated by adequate arrangement on back of panel.

D

- ❑ **Protection by boot**

In case of sand or splashing water, the best protection consists of insulating the rocker from these aggressive elements. This can be achieved with transparent PVC boot **U5720**. Order separately, see section H.

AGENCY APPROVALS

EN 61058-1

Availability : functions 1 and 6

Marking : approved models are standard marked.

Dimensions : first dimensions are in mm while inches are shown as bracketed numbers.

Packaging unit : 50 pieces.

The company reserves the right to change specifications without notice.

FM series

Snap-in rocker switches - panel cut-out 19 x 13 (.750 x .508)

Single pole - non-illuminated

- Approved ratings (functions 1 and 6) :
  VDE : 10(4)A 250VAC T85°C - **UL** : 6A 250VAC & 125VAC T65°C
- Max. contact rating :
  - functions 1 and 6 : see above.
  - function 3 : 4A 250VAC
  - functions 8 and 9 : 6A 250VAC
- Initial contact resistance : 20mΩ max.
- Insulation resistance : 1.000 MΩ min. at 500VDC
- Dielectric strength : - functions 1 and 6 : 2.500 Vrms between terminals
  - functions 3, 8 and 9 : 1.500 Vrms between terminals
- Electrical life at full load : 10 000 cycles

- Operating temperature :
  -20°C to +85°C
- Case, frame, rocker : PA6/6
- Contacts : silver
- Terminals : silver plated
- Panel cut-out :

Panel thickness	Dim. Y	Dim. Z
0,75 to 1,25 mm	19,2 +0/-0,1	12,9 +0,15/-0
1,25 to 2 mm	19,4 +0/-0,1	12,9 +0,15/-0
2 to 3 mm	19,8 +0/-0,1	12,9 +0,15/-0

FM	C			A			0	0	

SERIES

Rocker
- **C** Non illum. Concave

Electrical functions

1	ON	-	OFF
3	MOM	-	OFF
6	ON	-	ON
8	ON	OFF	MOM
9	ON	OFF	ON

Terminals
- **2** Solder lug
- **8** Quick-conn.
- **9** Straight PC (funct. 1 & 6)

Contacts
- **A** Silver

Frame colour
- **2** Black

Others : on request.

Rocker colours
- **1** Blue
- **2** Black (std)
- **3** Green
- **4** Grey
- **5** Yellow
- **6** Red (std)
- **7** Ivory
- **7/1** White
- **9** Orange

Lens colour
- **0** No lens

Lamp
- **0** None

Marking *
- **000** None
- **001** 0
- **002** O —
- **003** 0 I
- **004** I 0 II
- **005** OFF ON

* **Colour of marking** : white for black rockers - black for other colours - Other : on request.

D

Single throw and double throw switch

	1-2		2-3
FMC1	ON	-	OFF
FMC3	MOM	-	OFF
FMC6	ON	-	ON
FMC8	ON	OFF	MOM
FMC9	ON	OFF	ON

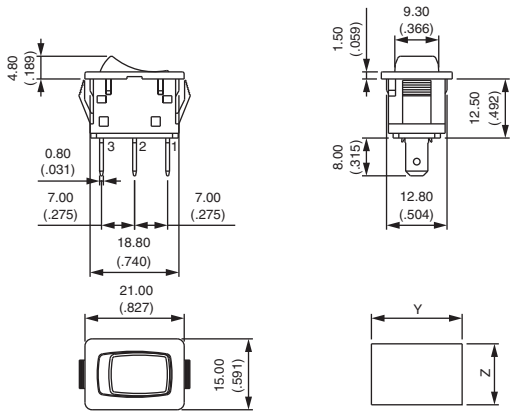

Shown with quick-connect terminals

TERMINALS

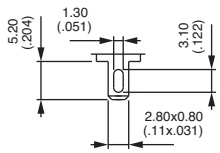

2
Solder lug

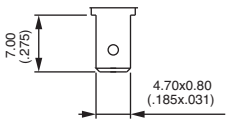

8
Quick-connect

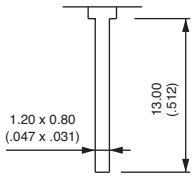

9
Straight PC (functions 1 and 6 only)

FM series

Snap-in rocker switches - panel cut-out 19 x 13 (.750 x .508)

Single pole - illuminated

- Approved ratings :
  VDE : 10(4)A 250VAC T85°C - **UL** : 6A 250VAC & 125VAC T65°C
- LED types available :
  3,3V (4V max.) 10mA LED (resistor to be series connected by the user)
  5V or 12V LED with integrated resistor
- Initial contact resistance : 20mΩ max.
- Insulation resistance : 1.000 MΩ min. at 500VDC
- Dielectric strength : 2.500 Vrms between terminals
- Electrical life at full load : 10 000 cycles
- Operating temperature: - 20°C to + 85°C
- Case, frame and rocker : PA6/6
- Lens : PC
- Contacts : silver
- Terminals : silver plated
- Lamp terminal : no plating
- Fluorescent lamp for blue or green lens, neon lamp for other colours
- Panel cut-out :

Panel thickness	Dim. Y	Dim. Z
0,75 to 1,25 mm	19,2 +0/-0,1	12,9 +0,15/-0
1,25 to 2 mm	19,4 +0/-0,1	12,9 +0,15/-0
2 to 3 mm	19,8 +0/-0,1	12,9 +0,15/-0

FM	L	1	8	A					

SERIES

Rocker
- **L** Illumin. concave

Electr. function
- **1** ON - OFF

Terminals
- **8** Quick-connect

Contacts
- **A** Silver

Frame colour
- **2** Black

Others : on request.

Rocker colour
- **1** Blue
- **2** Black (std)
- **3** Green
- **4** Grey
- **5** Yellow
- **6** Red (std)
- **7** Ivory
- **7/1** White
- **9** Orange

Lens colour
- **1** Blue *
- **3** Green *
- **5** Yellow
- **6** Red
- **8** Translucent
- **9** Orange

* w. fluorescent lamp

Lamp
- **A** 220V neon
- **B** 220V fluor.
- **C** 110V neon
- **D** 110V fluor.

LED 3,3V 10mA
- **E** Blue
- **F** Red/green
- **G** Green
- **H** Yellow
- **J** White
- **K** Red
- **L** Orange

No resistor**

LED 5V
- **N** Green
- **P** Yellow
- **Q** Red

LED 12V
- **T** Green
- **U** Yellow
- **V** Red

Marking *
- **000** None
- **001** 0

* **Colour of marking** : white for black rockers - black for other colours - Other : on request.

** Resistor value = $\frac{\text{supply voltage - LED forward voltage}}{\text{LED forward current}}$

Illuminated switches - quick-connect terminals

FML1 ON - OFF

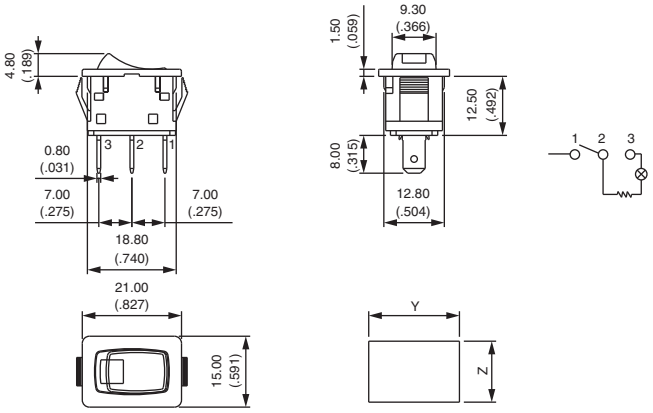

For LED models, terminal 2 = cathode (-), terminal 3 = anode (+)

2600 series

Power rocker switches

Distinctive features and specifications

- ❑ **Three rocker shapes : plain, V-shaped or concave**
- ❑ **Various rocker colours**
- ❑ **Frame with protection guard on 2600LP models**
- ❑ **Illuminated or non-illuminated**
- ❑ **UL, CSA, VDE and NF (EN 61058-1) approved**

ELECTRICAL SPECIFICATIONS

- Max. current/voltage rating with resistive load and approved ratings : see table below.
- Initial contact resistance : 10mΩ max.
- Insulation resistance : 1.000 MΩ min. at 500VDC
- Dielectric strength : 2.500 Vrms 50 Hz min. between terminals
  3.000 Vrms 50 Hz min. between terminals and metal panel
- Electrical life : 10.000 cycles at full load

FUNCTIONS	APPROVED RATINGS				DIRECT CURRENT	
	CSA (double pole)	UL (double pole)	VDE	NF	24 VDC	12 VDC
	CSA 22-2	UL 1054	EN 61058-1	EN 61058-1		
ON - OFF ON - ON	1/6 HP 125VAC 16A 125VAC 16A 250VAC 1/3 HP 250VAC	1/6 HP 125VAC 16A 125VAC 16A 250VAC 1/3 HP 250VAC	10(4)A 250VAC T 85/55	-	10A	15A
ON - OFF - ON	10A 125VAC 10A 250VAC 1/6 HP 125/250VAC	10A 125VAC 10A 250VAC 1/6 HP 125/250VAC	LI option 10(4)A 250VAC	LI option 10(4)A 250VAC	8A	10A
ON - ON - ON	-	-	-	-	5A	8A
OTHERS	10A 125VAC 10A 250VAC 1/6 HP 250VAC	-	LI option 10(4)A 250VAC	LI option 10(4)A 250VAC	8A	10A

MATERIALS

- Case : melamine/polyester
- Frame : polyamide
- Actuator : polyamide
- Contacts :
  A : silver
  C : copper, silver plated

GENERAL SPECIFICATIONS

- Panel thickness : 0,8 mm to 4 mm (.031 to .157)
- Operating temperature :
  - silver contacts (A) : -20°C to +85°C
  - silver plated contacts (C) : -10°C to +55°C

AGENCY APPROVALS

EN 61058-1 EN 61058-1

Availability : consult factory for details of approved models.

Marking : approved models are standard marked.

The company reserves the right to change specifications without notice.

D

2600 series

Power rocker switches

Overview

MODEL STRUCTURE

26					

SERIES

Number of poles

3	Single pole
4	Double pole

Electrical functions

1	ON	-	OFF
4	ON	ON	ON▲
5	MOM	-	ON
6	ON	-	ON
7	MOM	OFF	MOM
8	ON	OFF	MOM
9	ON	OFF	ON

▲ double pole only

Special contact

(none)	Standard

Frame type

LH	Plain
LP	With protection guard

Terminals

(none)	Screw + clamp
/2	Solder lugs /quick-connect
/3	Normalized quick-connect

ABOUT THIS SERIES
On the following pages, you will find successively :
- model structure of switches
- options in the same order as in above chart

Dimensions : first dimensions are in mm while inches are shown as bracketed numbers.

Sealing boot U2150 available to protect the switches against dust and water. See section H.

NOTICE : please note that not all combinations of above numbers are available.
Refer to the following pages for further information.

Contact materials

A	Silver
C	Copper, silver plated (functions 1, 6 and 9 only)

Rocker shapes

1	Plain
2	V-shaped
3	Concave

Rocker marking

Black	White		
00	**00**	(none)	
01	**21**	O	—
07	**27**	O	I
08	**28**	ON	OFF

Complete table at the end of the series.

Illuminated window

/3	green
/6	red

With green, use fluorescent lamp only.

Frame colours

1	blue
1/4	dark blue
2	black (standard)
4	grey
7/1	white
8	chrome plated
B	light brown
E	dark brown

Rocker colours

Illuminated rocker (without window)

0	Without rocker
1	blue
3	green
5	yellow
6	red
7/1	white
9	orange

With green or blue rocker, use fluorescent lamp only.

Non-illuminated rocker or rocker with illum. window•

0	Without rocker
02	light brown
04	dark brown
03	beige
10	blue
14	dark blue
20	black •
30	green •
40	grey
50	yellow
60	red •
70	white
90	orange

Lamps

L0	Without lamp
L6V	6V filament lamp
L12V	12V filament lamp
L24V	24V filament lamp
L110V	110VAC neon lamp
L110V1	110VAC blue fuor. lamp
L110V3	110VAC green fuor. lamp
L220V	220VAC neon lamp
L220V1	220VAC blue fuor. lamp
L220V3	220VAC green fuor. lamp
L380V	380VAC neon lamp
L380V1	380VAC blue fuor. lamp
L380V3	380VAC green fuor. lamp

L I option

L I	EN 61058-1 approved version, without lamp (3 position switches)

Packaging unit : 20 pieces per type and colour.

2600 series

Power rocker switches

MODEL STRUCTURE

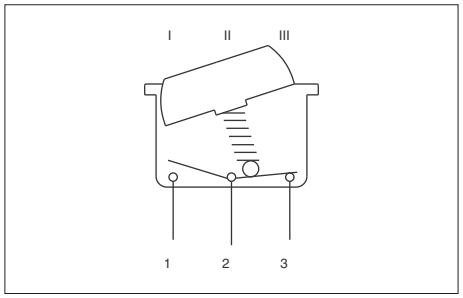

- Model 2600LP with protection guard
- 1 and 2 pole configurations

2640LH

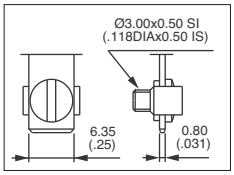

2640LH/2

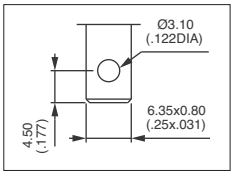

MODEL STRUCTURE

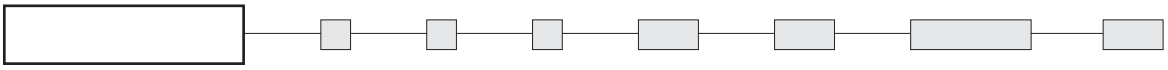

2600LH - single pole

Screw term. + clamp	Solder lug/ quick-connect	III A2-A1	II	I A2-A3
2631LH	**2631LH/2**	ON	-	OFF
2635LH	**2635LH/2**	MOM	-	ON
2636LH	**2636LH/2**	ON	-	ON
2637LH	**2647LH/2**	MOM	OFF	MOM
2638LH	**2638LH/2**	ON	OFF	MOM
2639LH	**2639LH/2**	ON	OFF	ON

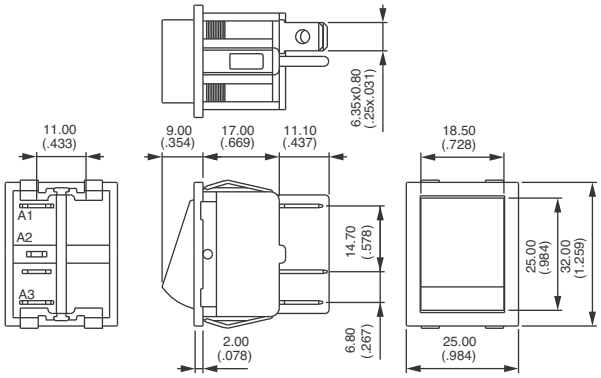

2600LH - double pole

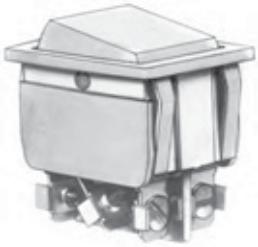

Screw term. + clamp	Solder lug/ quick-connect	III A2-A1 B5-B4	II	I A2-A3 B5-B6
2641LH	**2641LH/2**	ON	-	OFF
2644LH*	**2644LH/2***	ON	ON	ON
2645LH	**2645LH/2**	MOM	-	ON
2646LH	**2646LH/2**	ON	-	ON
2647LH	**2647LH/2**	MOM	OFF	MOM
2648LH	**2648LH/2**	ON	OFF	MOM
2649LH	**2649LH/2**	ON	OFF	ON

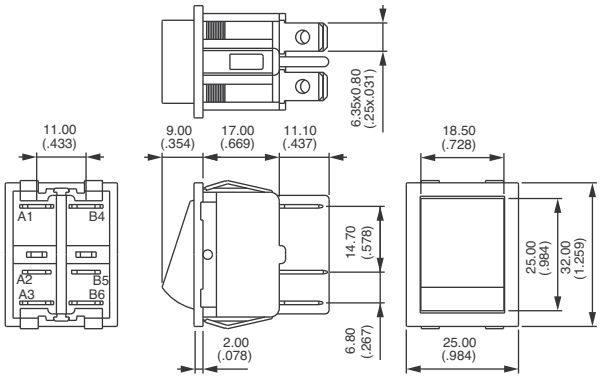

* Function 4 : SP in DP case, see end of catalogue.

2600LP - with protection guard - single pole

Screw term. + clamp	Solder lug/ quick-connect	III A2-A1	II	I A2-A3
2631LP	**2631LP/2**	ON	-	OFF
2635LP	**2635LP/2**	MOM	-	ON
2636LP	**2636LP/2**	ON	-	ON
2637LP	**2637LP/2**	MOM	OFF	MOM
2638LP	**2638LP/2**	ON	OFF	MOM
2639LP	**2639LP/2**	ON	OFF	ON

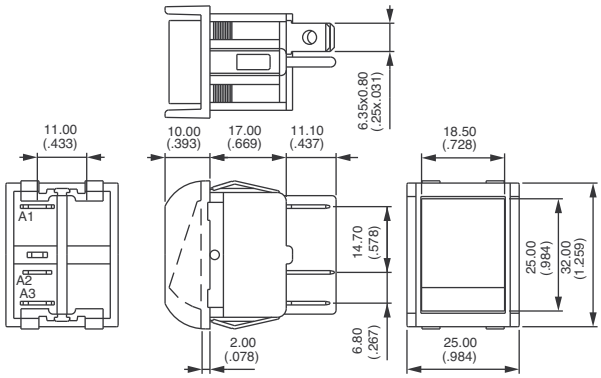

2600LP - with protection guard - double pole

Screw term. + clamp	Solder lug/ quick-connect	III A2-A1 B5-B4	II	I A2-A3 B5-B6
2641LP	**2641LP/2**	ON	-	OFF
2644LP*	**2644LP/2***	ON	ON	ON
2645LP	**2645LP/2**	MOM	-	ON
2646LP	**2646LP/2**	ON	-	ON
2647LP	**2647LP/2**	MOM	OFF	MOM
2648LP	**2648LP/2**	ON	OFF	MOM
2649LP	**2649LP/2**	ON	OFF	ON

* Function 4 : SP in DP case, see end of catalogue.

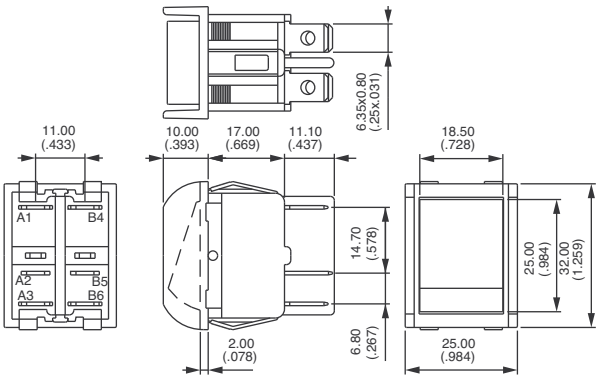

PANEL CUT-OUT

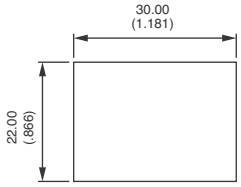

TERMINAL OPTION

Specify after LH or LP.

/3 Normalized quick-connect terminals 6,35 x 0,8 (.250 x .031)

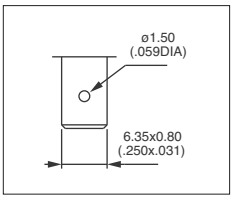

2600 series

Power rocker switches

OPTIONS

CONTACT MATERIALS

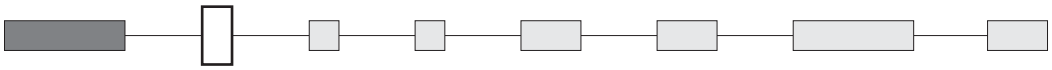

A	Silver
C	Copper, silver plated (available with functions 1, 6 and 9 only)

FRAME COLOURS

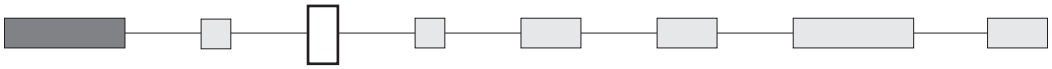

1	Blue
1/4	Dark blue
2	Black (standard)
4	Grey
7/1	White
8	Chrome plated
B	Light brown
E	Dark brown

This option has UL approval only.

ROCKER SHAPES

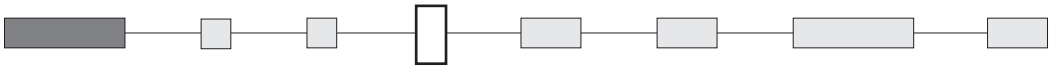

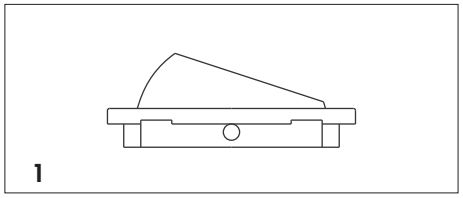

1

Plain

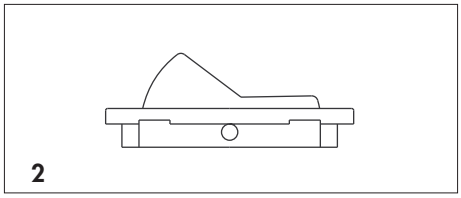

2

V-shaped

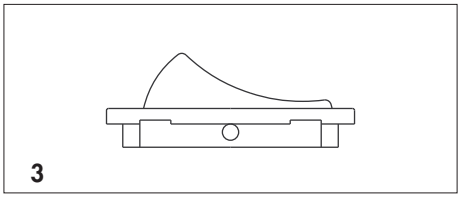

3

Concave

D

ROCKER COLOURS

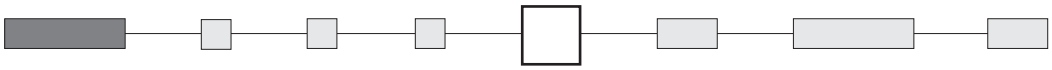

For illuminated switches

	Without rocker	Blue*	Green*	Yellow	Red	White	Orange
Plain rocker P/N	-	U881	U883	U885	U886	U887	U889
V-shaped rocker P/N	-	U861	U863	U865	U866	U867	U869
Concave rocker P/N	-	U871	U873	U875	U876	U877	U879
Colour code	**0**	**1**	**3**	**5**	**6**	**7/1**	**9**

* With green or blue rocker, use fluorescent lamp only.

For non-illuminated switches or switches with illuminated window (•)

	Without rocker	Light brown	Dark brown	Beige	Blue	Dark blue	Black	Green	Grey	Yellow	Red	White	Orange
Plain rocker P/N	-	U1250B	U1250BF	U1250	U1251	U1251/4	U1252	U1253	U1254	U1255	U1256	U1257	U1259
V-shaped rocker P/N	-	U1270B	U1270BF	U1270	U1271	U1271/4	U1272	U1273	U1274	U1275	U1276	U1277	U1279
Concave rocker P/N	-	U1260B	U1260BF	U1260	U1261	U1261/4	U1262	U1263	U1264	U1265	U1266	U1267	U1269
Colour code	**0**	**02**	**04**	**03**	**10**	**14**	**20•**	**30•**	**40**	**50**	**60•**	**70**	**90**

Complete box with one of above colour codes.
To order rockers separately, use their P/N (U....) and complete box with code 0.
Rockers with illuminated windows (codes 20, 30, 60) : part numbers on request.

ROCKER MARKING

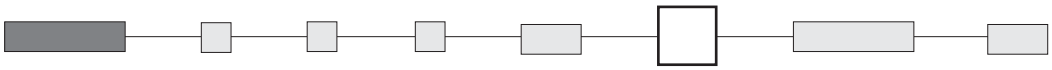

MARKING / COLOUR	-		A M			OFF ON	STOP	STOP	STOP			
Black	**00**	**01**	**02**	**06**	**07**	**08**	**03**	**04**	**05***	**40**	**43***	**46**
Red	**00**	**11**	**12**	**16**	**17**	**18**	**13**	**14**	**15***	**41**	**44***	**47**
White	**00**	**21**	**22**	**26**	**27**	**28**	**23**	**24**	**25***	**42**	**45***	**48**

* Not available on V-shaped rockers

Special markings and marking on rockers with illuminated window : consult factory.

LAMP

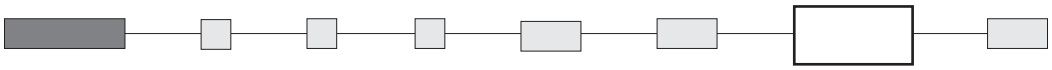

L0	Non-illuminated switch
L6V	Filament lamp 6V
L12V	Filament lamp 12V
L24V	Filament lamp 24V
L110V	Neon lamp 110VAC
L110V1	BLUE fluorescent lamp 110VAC
L110V3	Green fluorescent lamp 110VAC
L220V	Neon lamp 220VAC
L220V1	BLUE fluorescent lamp 220VAC
L220V3	Green fluorescent lamp 220VAC
L380V	Neon lamp 380VAC
L380V1	BLUE fluorescent lamp 380VAC
L380V3	Green fluorescent lamp 380VAC
L I	EN61058-1 approved version without lamp (3 position switches)

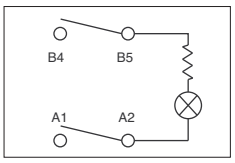

For illuminated models, the lamp is always connected between center terminals 2 and 5.

Lamps L380V, L380V1 and L380V3 are not UL/CSA approved.

D

ILLUMINATED WINDOW

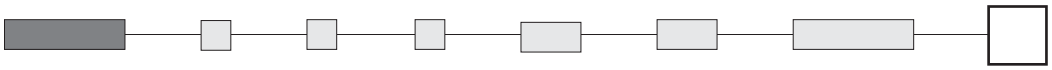

For black, green and red rockers only

/3 Green
/6 Red

With green, use fluorescent lamp only.
No marking available on illuminated windows.

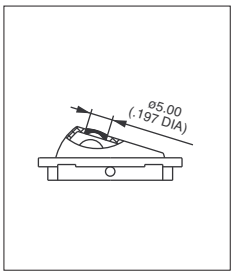

Attractive rugged rocker switch

Removable actuator
Easy to stock
Easy to customize

Up-to-date rocker design
Smooth curves
Wide choice of colours and symbols
Laser etched symbols on illuminated versions

High performance LEDs
Long life expectancy
An array of colours and voltages

Optional panel seal

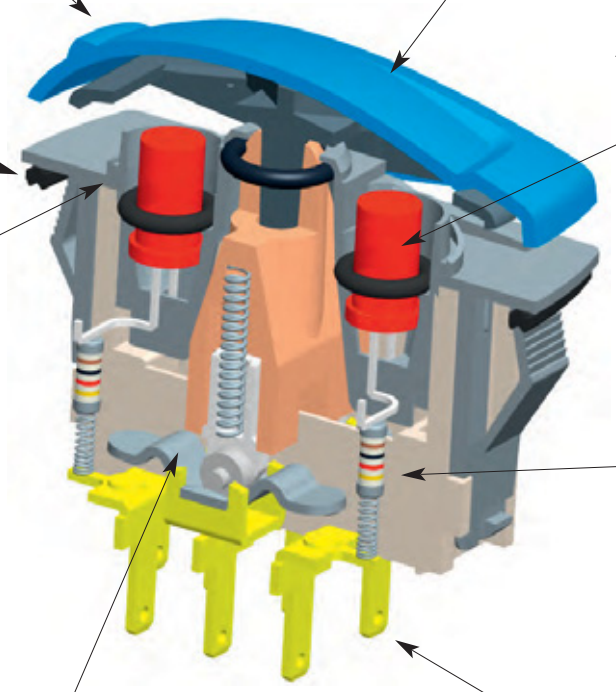

High performance ultrasonic welding
Protection against dust and the effects of continuous immersion under pressure.

Integrated resistors
Easy electrical connection

Robust roller contact
Very long life expectancy
Many electrical functions available

Large variety of terminal options
Up to 10 terminals
Screw, solder lug and quick-connect

APEM will be happy to develop custom product solutions. Please contact us with your requirements.

The company reserves the right to change specifications without notice.

KR series

Power rocker switches

Specifications

- ❑ **Unique rocker design**
- ❑ **Wide choice of colours**
- ❑ **Laser etched symbols**
- ❑ **Illuminated or non-illuminated**
- ❑ **Optionally sealed to IP68**

ELECTRICAL SPECIFICATIONS

- Currrent/voltage rating with resistive load :
  - Silver plated contacts (A) : 5A 24VDC, 100.000 cycles
  10A 24VDC, 10.000 cycles (terminals 6.35 x 0.8 only)
  - Gold plated contacts (D) : 20mA 12V, 150.000 cycles
- Current/voltage rating with lamp load - silver contacts (A) :
  - functions 1 & 6 : 100W 24VDC, 10.000 cycles
  - other functions : 60W 24VDC, 10.000 cycles
- Initial contact resistance : 10 mΩ max.
- Insulation resistance : 1.000 MΩ min. at 500VDC
- Dielectric strength : 2.000 Vrms 50 Hz min. between terminals
- Mechanical life :150.000 cycles min.

ENVIRONMENTAL SPECIFICATIONS

- Degree of protection of sealed versions : frontal sealing to IP68 acc. to IEC 60529 (submersion under 1 meter of water for more than 30 minutes)
- Salt spray resistance : 96 hours according to IEC 512-6, test 11f
- Vibration resistance : 10-500 Hz / 10 g per IEC 60068-2-6
- Operating temperature : -40°C to +85°C

DIMENSIONS

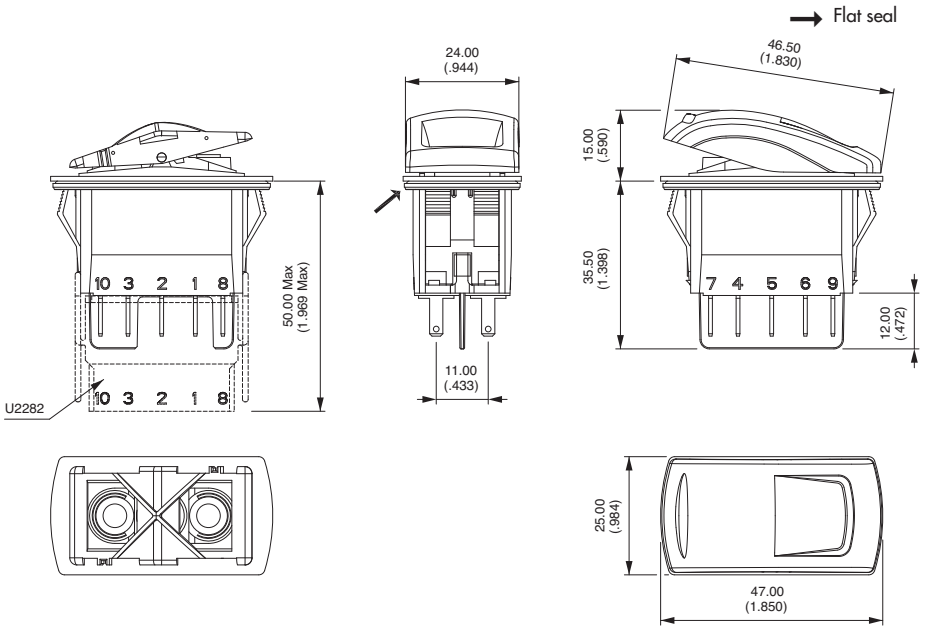

MATERIALS

- Case : PA 6-6
- Actuator : ABS
- Bezel : PA 6-6
- Contacts & terminals : brass, solid silver grain, silver plated (A) or brass, solid silver grain, gold plated (D)
- Contact roller : brass, nickel plated

SEALING

Sealing is optional.

To order a sealed product, complete the appropriate box of ordering format on the following pages.

Packaging unit : 40 pieces

Dimensions : First dimensions are in mm while inches are shown as bracketed numbers.

HOW TO ORDER

- **To order a complete product, fill in all the boxes of the following order guide.**
- **To order case only (without actuator), finish your order number with the LED wiring code.**
- **To order actuator only (without case), begin the order number with code KRR, then follow the order format from "actuator type" until the end of the options.**

CASE + LEDS

KR						Side A	Side B	

SERIES

Poles

3	Single pole
4	Double pole

Electrical functions

1	ON	-	OFF
4	ON	ON	ON
4-1R	ON	ON	MOM
5	MOM	-	ON
6	ON	-	ON
7	MOM	OFF	MOM
8	ON	OFF	MOM
9	ON	OFF	ON

Function 1 only for 6-terminal versions.
Functions 5 and 6 cannot be combined with "H" wiring.

Terminals

Screw
- **0** 6 terminals with barrier

Solder lug/quick-connect
- **2** 6 terminals with barrier
- **4** 6 terminals w/o barrier
- **A** 10 term. with barrier
- **B** 10 term. w/o barrier
- **C** 10 terminals for use with connector U2292

Quick-connect 6,35x0,8
- **3** 6 terminals with barrier

Terminals (continued)

Quick-connect 6,35x0,8
- **5** 6 terminals w/o barrier
- **D** 10 term. with barrier
- **E** 10 term. w/o barrier
- **F** 10 term. for use with connector U2292

Quick-connect 2,8x0,8
- **G** 10 term. with barrier
- **H** 10 term. w/o barrier
- **J** 10 terminals for use with connector U2282

Contacts

A	Silver
D	Gold plated

Sealing

X	No
K	Yes

LEDS

X	None
A	LED 6V red
B	LED 6V green
C	LED 6V yellow
M	LED 6V blue
R	LED 6V white
D	LED 12V red
E	LED 12V green
F	LED 12V yellow
N	LED 12V blue
S	LED 12V white
J	LED 24V red
K	LED 24V green
L	LED 24V yellow
P	LED 24V blue
T	LED 24V white
...	

Wiring

See following pages.

ACTUATOR

Type

1	For non-illuminated application
2	For illuminated application

Colour

1	Blue
1/4	Dark blue
2	Black
3	Green
4	Grey
5	Yellow
6	Red
7	Ivory
9	Orange
A	Aluminium bright

ACTUATOR MARKING

	Area A	Area M	Area B

Orientation

N

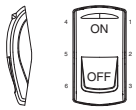

O

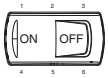

S

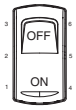

E

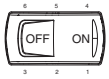

Symbols

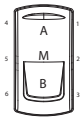

Symbols & **Accessories** : see end of section D.

⚠ **NOTICE** : please note that not all combinations of above numbers are available. Refer to the following pages for further information.

KR series

Power rocker switches

Case

• **To order case only (without rocker), finish your order number with the LED wiring code.**

MODEL STRUCTURE

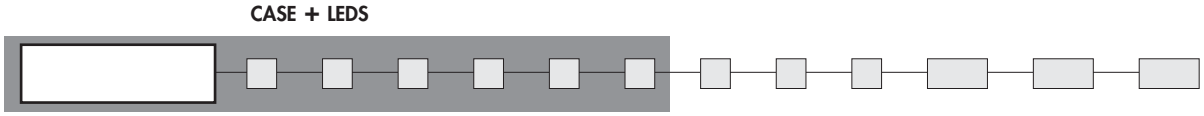

Single pole	Double pole	2-3 / 5-6		1-2 / 4-5
KR31	**KR41**	ON	-	OFF
	KR44*	ON	ON	ON
	KR44-1R*	ON	ON	MOM
KR35	**KR45**	MOM	-	ON
KR36	**KR46**	ON	-	ON
KR37	**KR47**	MOM	OFF	MOM
KR38	**KR48**	ON	OFF	MOM
KR39	**KR49**	ON	OFF	ON

* Function 4 : single pole in double pole case

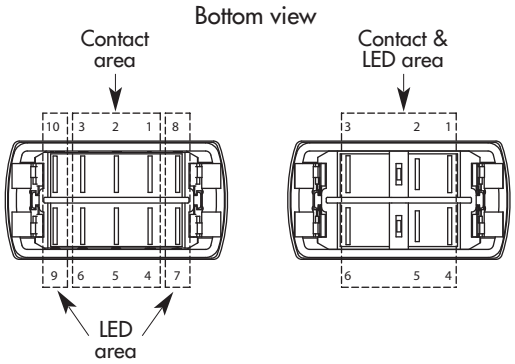

10 terminal version — 6 terminal version

D

ELECTRICAL FUNCTIONS AND CONNECTIONS

In the tables below, terminal connections as viewed from bottom of switch.
Only the contact area is represented.
For single pole models, only terminals 1, 2 and 3 are to be considered (not terminals 6, 5, 4).

x = w/o terminal
o = with terminal
▲ = momentary

	Positions		
	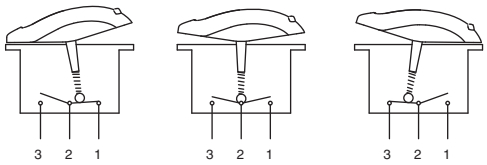		
Function 1 * KR31-KR41			
Function 5 KR35-KR45			
Function 6 KR36-KR46			
Function 7 KR37-KR47		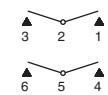	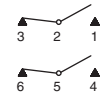

	Positions		
	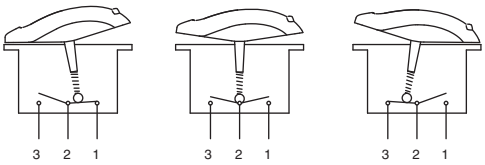		
Function 8 KR38-KR48			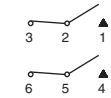
Function 9 KR39-KR49			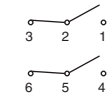
Function 4 KR44			
Function 4-1R KR44-1R			

* Function 1 only available for 6 terminal versions.

TERMINALS

CASE + LEDS

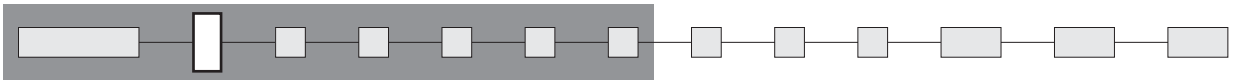

Screw

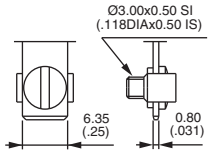

0 6 term. with barrier

Solder lug / quick-connect

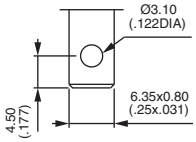

2 6 terminals with barrier
4 6 terminals w/o barrier

A 10 terminals with barrier
B 10 terminals w/o barrier
C 10 terminals for use with connector U2292

Normalized quick-connect 6,35x0,8

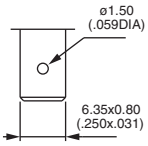

3 6 terminals with barrier
5 6 terminals w/o barrier

D 10 terminals with barrier
E 10 terminals w/o barrier
F 10 terminals for use with connector U2292

Normalized quick-connect 2,8x0,8

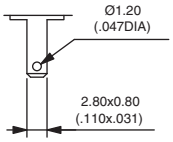

G 10 terminals with barrier
H 10 terminals w/o barrier
J 10 terminals for use with connector U2282

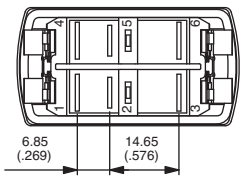

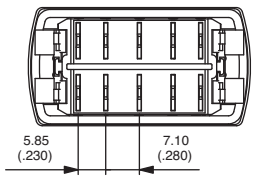

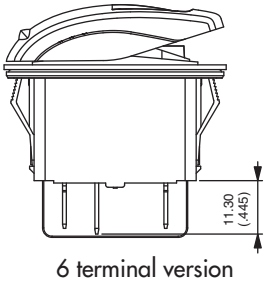

6 terminal version

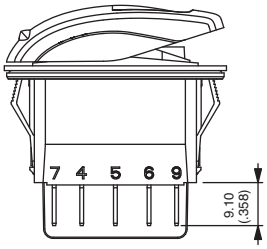

10 terminal version

Terminals are marked on the case.

The drawings show the maximum possible number of terminals.

CONTACT MATERIALS

CASE + LEDS

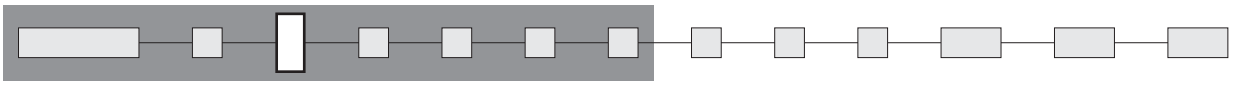

A Silver
D Silver, gold plated

SEALING

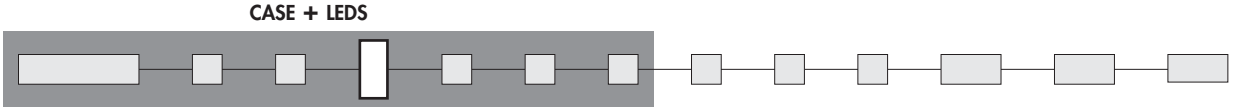

X No sealing

K IP68 (switch assembled on panel)

Ultrasonic welding of frame to case is standard on all versions.
The ultrasonic welding and the optional panel seal prevent water and dust from introducing into the switch housing.

The product shall be installed professionally.
Test conditions available on request.

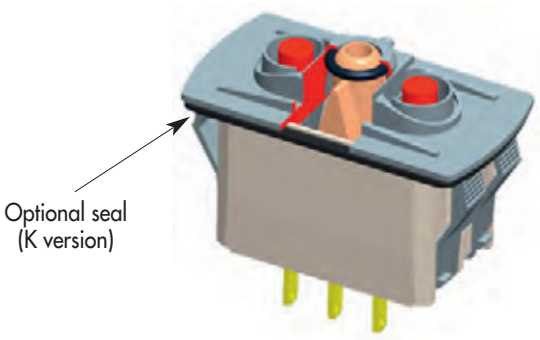

LEDS

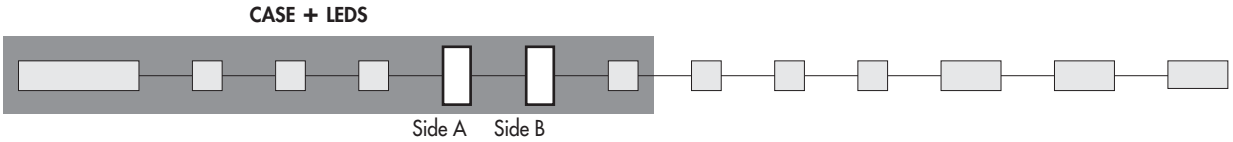

Complete each enlarged box with one of the codes listed below.

X Without LED

	Red	Green	Yellow	Blue	White	Red/green
6VDC	**A**	**B**	**C**	**M**	**R**	**1**
12VDC	**D**	**E**	**F**	**N**	**S**	**2**
24VDC	**J**	**K**	**L**	**P**	**T**	**3**
No resistor	**U**	**V**	**W**	**Y**	**Z**	**-**

LED consumption : 20mA @ nominal voltage (25°C)
Other illumination solutions : on request.

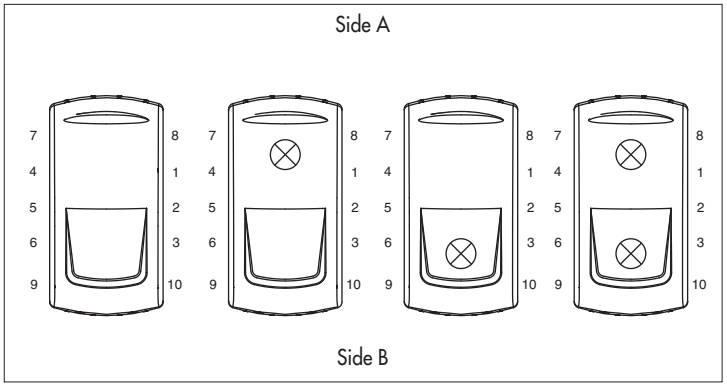

WIRING

The LED wiring diagram is shown on the case.

CASE + LEDS

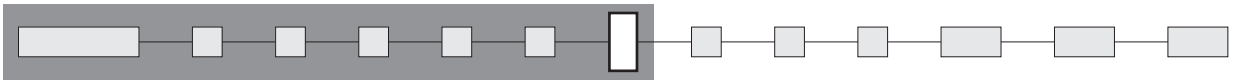

• For 6 terminal versions

LED connected to the load

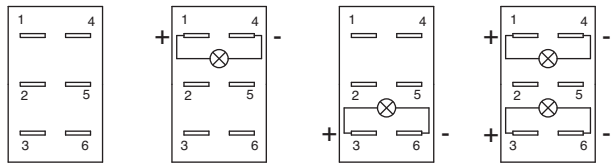

A (standard)

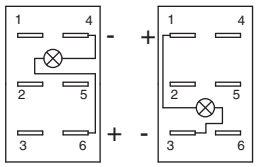

B

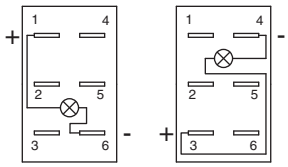

C

Note : If not available, terminals are added to connect the LED.

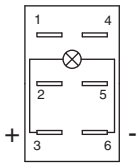

D - for function 1 (on-off) with LED on side A

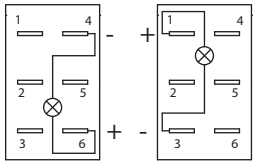

E

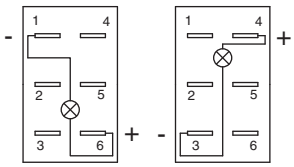

F

• For 10 terminal versions

Independent LED or integrated functions

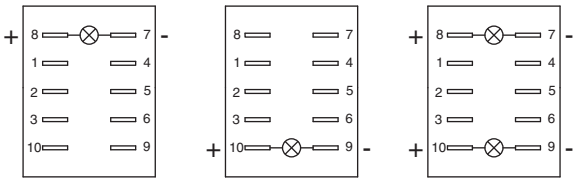

G (standard)

To have independent LEDs.

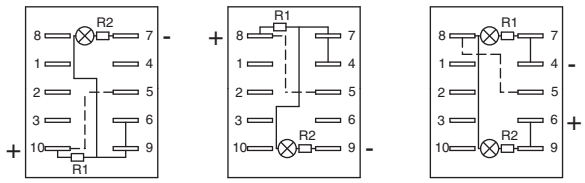

H

Available in Single Pole only, with H and J quick-connect terminals.

To obtain 2 symbol illumination levels (night illumination when OFF and higher illumination when ON).

H wiring with LED on side A available with functions 6, 8, 9 and 44.
H wiring with LED on side B available with functions 5, 6 and 9.
H wiring with 2 LEDs available with functions 8 and 9.
More information (H wiring schematics) : on request.

Dotted line = external wiring, continuous line = internal wiring

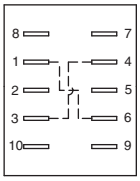

I

Power supply betweeen 2 and 5 - Load between 1 and 4 or 3 and 6.
Available with H and J quick-connect terminals.

To have a polarity inversion (typical application : fan motor).

Dotted line = external wiring

Please contact us for other wiring solutions.

KR series

Power rocker switches

Actuator - Marking

To order actuator only (without case), begin the order number with code KRR, then follow the order format from "actuator type" until the end of the options.

ACTUATOR TYPE

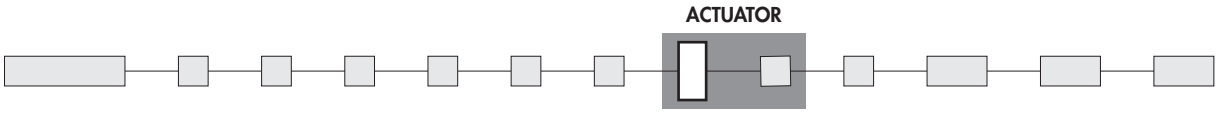

1 For non-illuminated application
2 For illuminated application

Other rocker design : on request.

ACTUATOR COLOUR

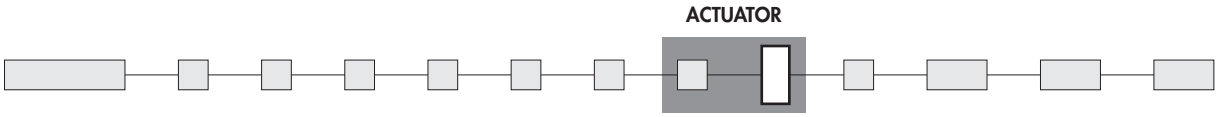

Code	Colour
1	Blue
1/4	Dark blue
2	Black
3	Green

Code	Colour
4	Grey
5	Yellow
6	Red
7	Ivory

Code	Colour
7/1	White
9	Orange
A	Aluminium bright

Note : colours 7 and 7/1 not available on illuminated versions.

A **soft-touch varnish** can be added. Consult us.

MARKING ORIENTATION

If no marking required, complete the box with code N.

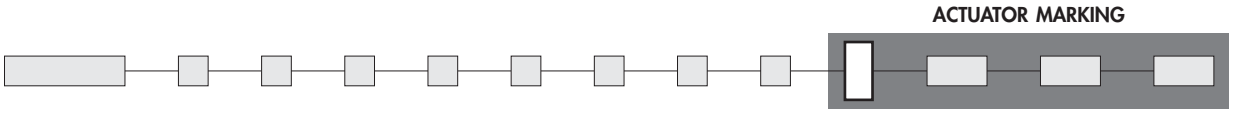

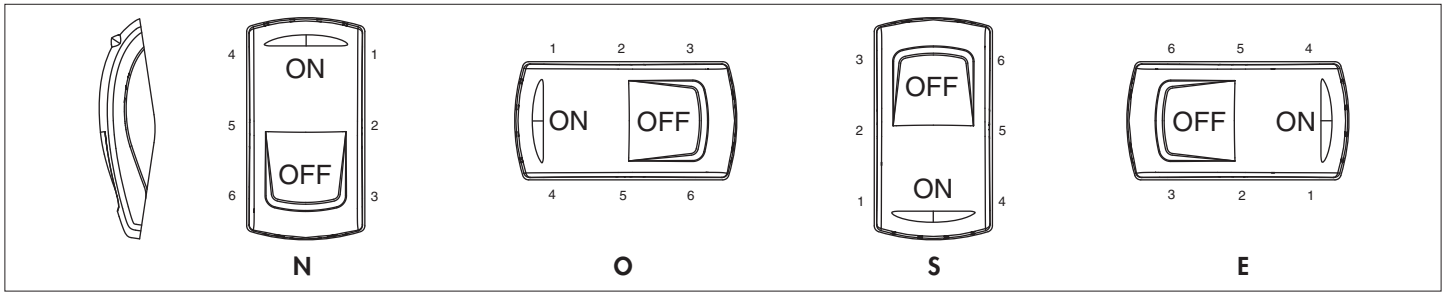

Other orientations : on request

SYMBOLS

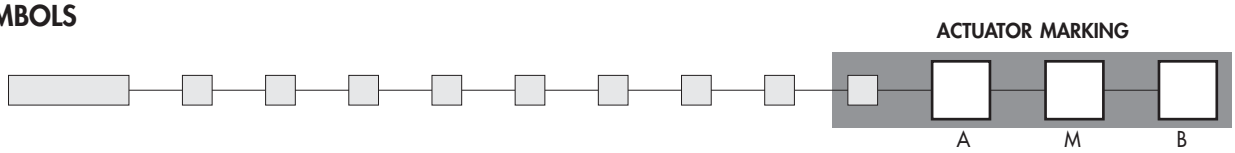

XX No symbol

Available symbols : see end of section D.

Marking colour
White marking for illuminated rockers (laser etching) and non-illuminated black rockers (pad printing). Black marking for non-illuminated colour rockers (pad printing). Other : on request.

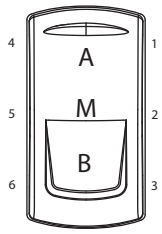

Laser etching resistance
- Water and petrol resistant acccording to EN61058-1
- Tear resistant (cross-cut test) according to NF ISO 2409 : class 0
- UV resistant according to ISO 4892-2

Marking area
For illuminated versions. The symbol will be included in the hatched area.
Marking in M area : on request.

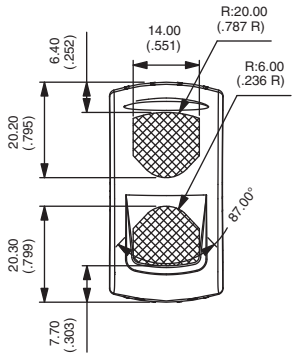

SWITCH PANEL CUT-OUT

Panel thickness : 0,8 mm to 4,6 mm

Recommended panel thickness :
between 2 mm and 3,5 mm

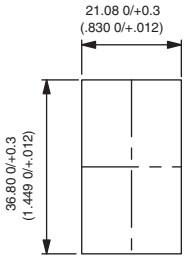

MATRIX MOUNTING

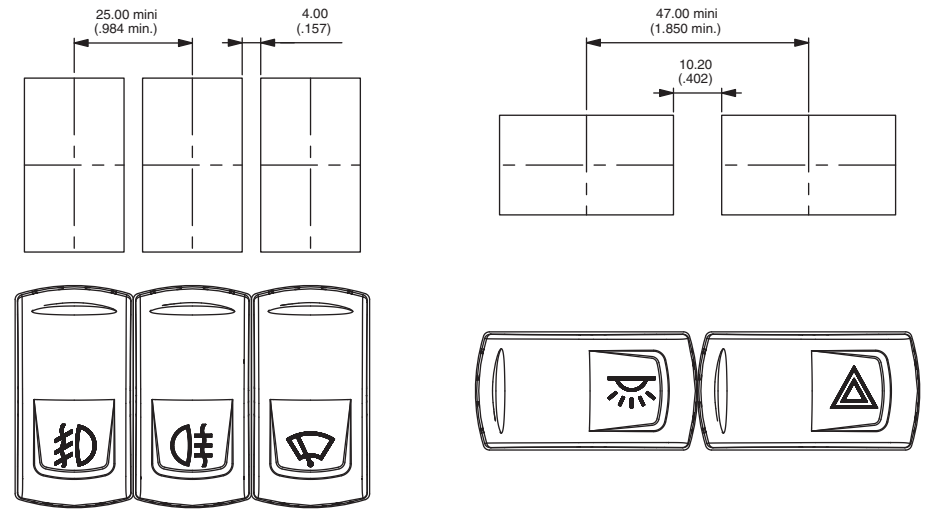

D

KL series

Locking power rocker switches

Distinctive features

Unlocking actuator

Each KL rocker switch includes an unlocking actuator.

This actuator must be pressed to activate the protected function of the rocker. Moreover, two frames protect the unlocking actuator from untimely activation.

This intuitive and secured ergonomics is patented by APEM.

2 position versions (electrical functions 1, 5 and 6)

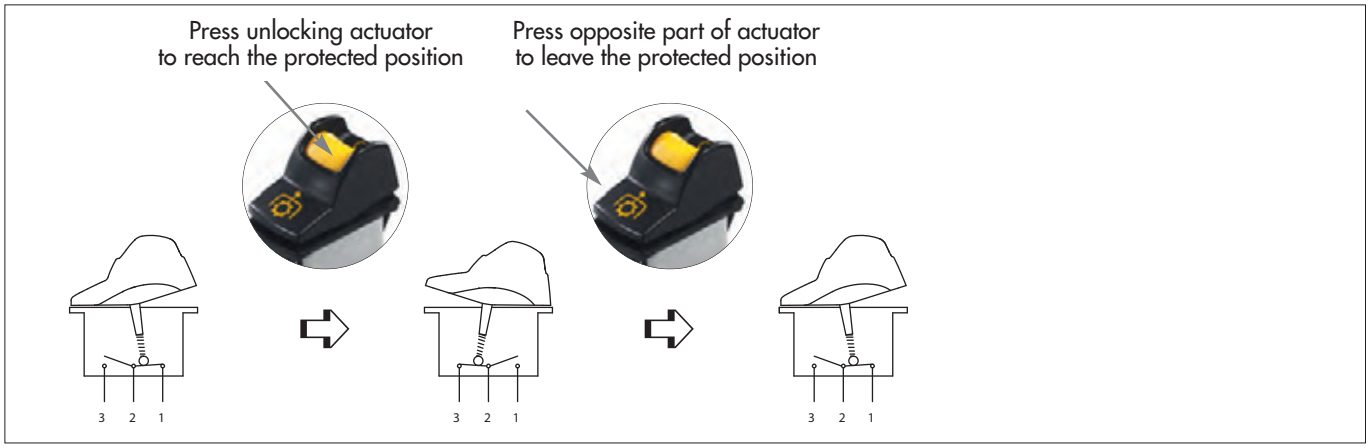

3 position versions (electrical functions 7, 8, 9 4, 4-1R)

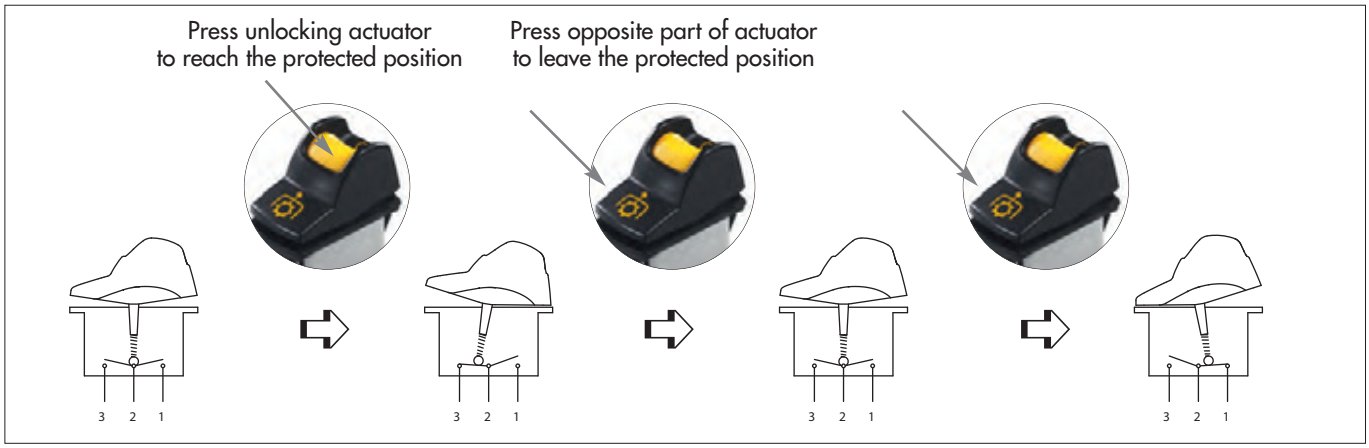

The company reserves the right to change specifications without notice.

- ❑ **One protected position**
- ❑ **Patented intuitive ergonomics**
- ❑ **Wide choice of colours**
- ❑ **Laser etched symbols**
- ❑ **Illuminated or non-illuminated**
- ❑ **Optionally sealed to IP68**

ELECTRICAL SPECIFICATIONS

- Currrent/voltage rating with resistive load :
  - Silver plated contacts (A) : 5A 24VDC, 100.000 cycles
    10A 24VDC, 10.000 cycles (terminals 6.35 x 0.8 only)
  - Gold plated contacts (D) : 20mA 12V, 150.000 cycles
- Initial contact resistance : 10 mΩ max.
- Insulation resistance : 1.000 MΩ min. at 500VDC
- Dielectric strength : 2.000 Vrms 50 Hz min. between terminals
- Mechanical life : 150.000 cycles min.

ENVIRONMENTAL SPECIFICATIONS

- Degree of protection of sealed versions : frontal sealing to IP68 according to IEC 60529 (submersion under 1 meter of water for more than 30 minutes)
- Salt spray resistance : 96 hours according to IEC 512-6, test 11f
- Operating temperature : -40°C to +85°C

MATERIALS

- Case : PA 6-6
- Actuator and unlocking actuator : ABS
- Bezel : PA 6-6
- Contacts & terminals : brass, solid silver grain, silver plated (A) or brass, solid silver grain, gold plated (D)
- Contact roller : brass, nickel plated

SEALING

Sealing is optional.

To order a sealed product, complete the appropriate box of ordering format on the following pages.

DIMENSIONS

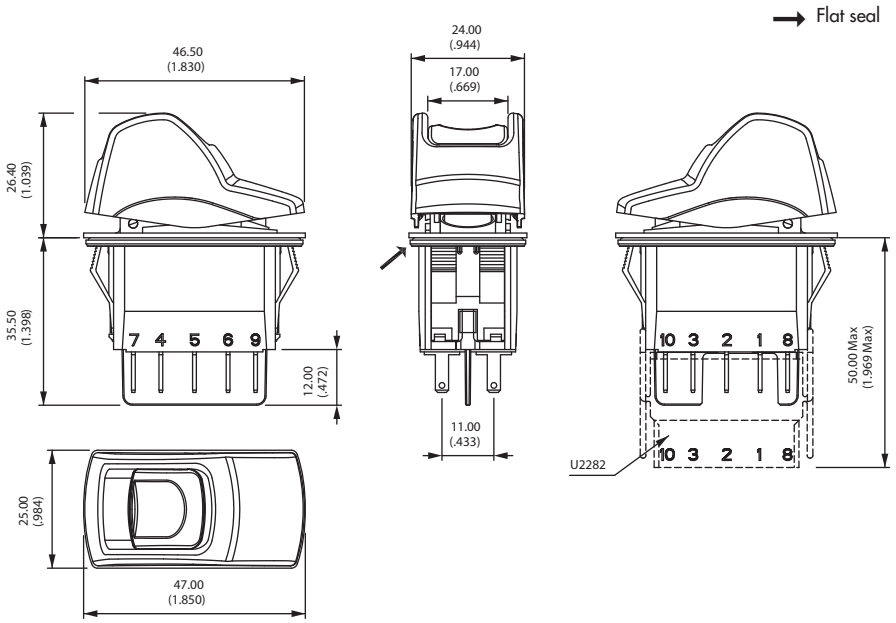

Packaging unit : 40 pieces

Dimensions : First dimensions are in mm while inches are shown as bracketed numbers.

KL series

Locking power rocker switches

Selection guide

• **To order a complete product, fill in all the boxes of the following order guide.**

CASE + LEDS

KL						Side B	

SERIES

Poles

3	Single pole
4	Double pole

Electrical functions

1	ON	-	OFF
4	ON	ON	ON
4-1R	ON	ON	MOM
5	MOM	-	ON
6	ON	-	ON
7	MOM	OFF	MOM
8	ON	OFF	MOM
9	ON	OFF	ON

Function 1 only for 6-terminal versions.
Functions 5 and 6 cannot be combined with "H" wiring.

Terminals

Screw
0 6 terminals with barrier
Solder lug/quick-connect
2 6 terminals with barrier
4 6 terminals w/o barrier
A 10 term. with barrier
B 10 term. w/o barrier
C 10 terminals for use with connector U2292
Quick-connect 6,35x0,8
3 6 terminals with barrier

Terminals (continued)

Quick-connect 6,35x0,8
5 6 terminals w/o barrier
D 10 term. with barrier
E 10 term. w/o barrier
F 10 term. for use with connector U2292
Quick-connect 2,8x0,8
G 10 term. with barrier
H 10 term. w/o barrier
J 10 terminals for use with connector U2282

Contacts

A	Silver
D	Gold plated

Sealing

X	No
K	Yes

LEDS

X	None
A	LED 6V red
B	LED 6V green
C	LED 6V yellow
M	LED 6V blue
R	LED 6V white
D	LED 12V red
E	LED 12V green
F	LED 12V yellow
N	LED 12V blue
S	LED 12V white
J	LED 24V red
K	LED 24V green
L	LED 24V yellow
P	LED 24V blue
T	LED 24V white

Wiring

See following pages.

ACTUATOR

Type

1	For non-illum. application
2	For illuminated application

Rocker colour

1	Blue
1/4	Dark blue
2	Black
3	Green
4	Grey
5	Yellow
6	Red
7	Ivory
9	Orange

Unlocking actuator colour

1	Blue
1/4	Dark blue
2	Black
3	Green
4	Grey
5	Yellow
6	Red
7	Ivory
9	Orange

ACTUATOR MARKING

	Area A	Area B	

Orientation

N

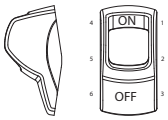

Symbols

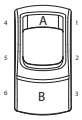

Symbols & Accessories : see end of section D.

Marking colour

Illuminated models
Blank White

Non-illuminated

1	Blue
2	Black
3	Green
4	Grey
5	Yellow
6	Red
7	White
9	Orange

⚠ **NOTICE** : please note that not all combinations of above numbers are available. Refer to the following pages for further information.

D

MODEL STRUCTURE

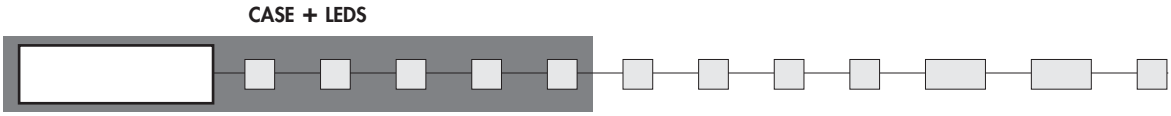

Single pole	Double pole	2-3 / 5-6		1-2 / 4-5
KL31	**KL41**	ON	-	OFF
	KL44*	ON	ON	ON
	KL44-1R*	ON	ON	MOM
KL35	**KL45**	MOM	-	ON
KL36	**KL46**	ON	-	ON
KL37	**KL47**	MOM	OFF	MOM
KL38	**KL48**	ON	OFF	MOM
KL39	**KL49**	ON	OFF	ON

* Function 4 : single pole in double pole case

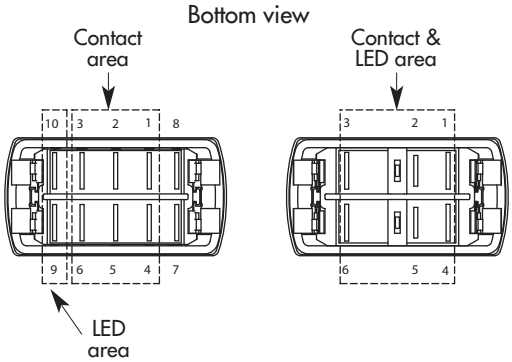

10 terminal version — 6 terminal version

ELECTRICAL FUNCTIONS AND CONNECTIONS

In the tables below, terminal connections as viewed from bottom of switch. Only the contact area is represented. For single pole models, only terminals 1, 2 and 3 are to be considered (not 6, 5, 4).

x = w/o terminal
o = with terminal
▲ = momentary

D

	2 positions		
	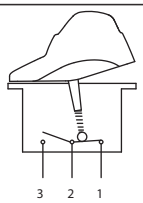	Press unlocking actuator to unlock. →	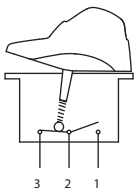
Function 1 * KL31-KL41			
Functionn 5 KL35 - KL45			
Function 6 KL36-KL46			

	3 positions		
	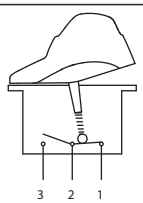	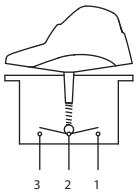	→ 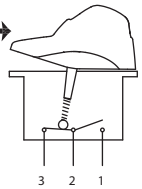
Function 7 KL37-KL47		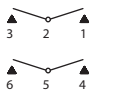	
Function 8 KL38-KL48		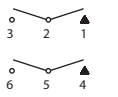	
Function 9 KL39-KL49		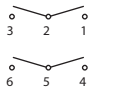	
Function 4 KL44			
Function 4-1R KL44-1R			

*** Function 1**
- Only available for 6 terminal versions.
- Illuminated versions only available with "A" wiring.

KL series

Locking power rocker switches

Case

TERMINALS

CASE + LEDS

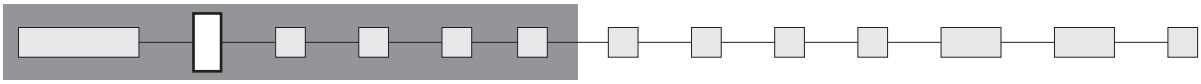

Screw

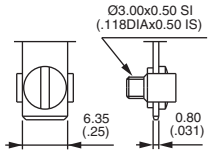

0 6 term. with barrier

Solder lug / quick-connect

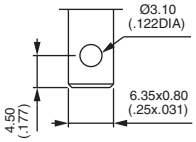

2 6 terminals with barrier
4 6 terminals w/o barrier

A 10 terminals with barrier
B 10 terminals w/o barrier
C 10 terminals for use with connector U2292

Normalized quick-connect 6,35x0,8

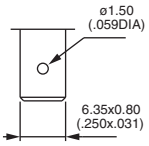

3 6 terminals with barrier
5 6 terminals w/o barrier

D 10 terminals with barrier
E 10 terminals w/o barrier
F 10 terminals for use with connector U2292

Normalized quick-connect 2,8x0,8

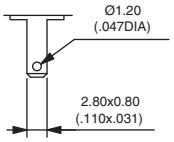

G 10 terminals with barrier
H 10 terminals w/o barrier
J 10 terminals for use with connector U2282

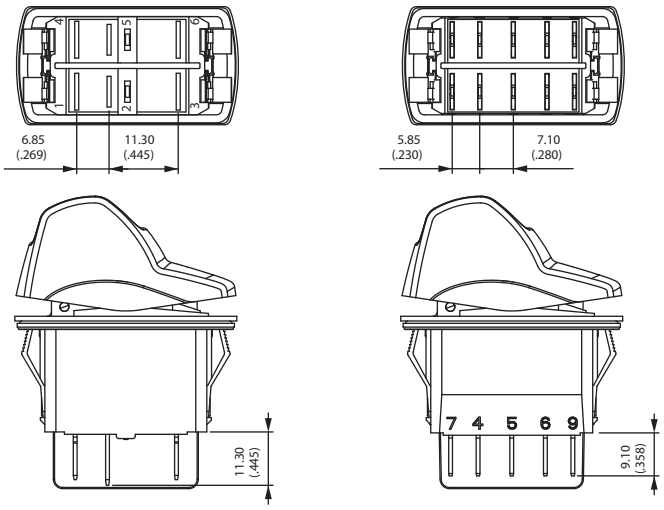

6 terminal version

10 terminal version

Terminals are marked on the case.

The drawings show the maximum possible number of terminals.

CONTACT MATERIALS

CASE + LEDS

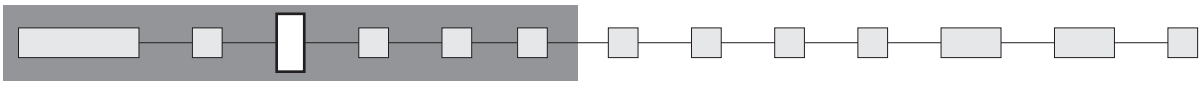

A Silver
D Silver, gold plated

SEALING

CASE + LEDS

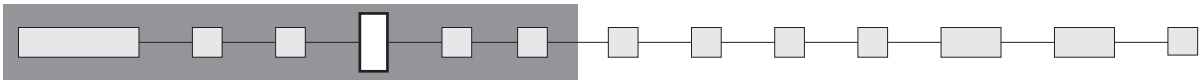

X No sealing

K IP68 (switch assembled on panel)

Ultrasonic welding of frame to case is standard on all versions.
The ultrasonic welding and the optional panel seal prevent water and dust from introducing into the switch housing.

The product shall be installed professionally.
Test conditions available on request.

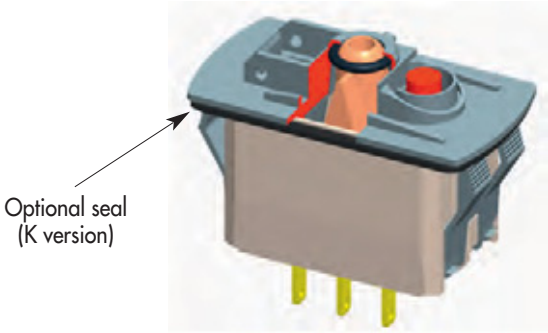

LEDS

CASE + LEDS

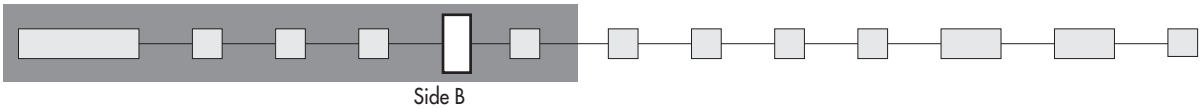

Side B

Complete enlarged box with one of the codes listed below.

X Without LED

	Red	Green	Yellow	Blue	White	Red/green
6VDC	**A**	**B**	**C**	**M**	**R**	**1**
12VDC	**D**	**E**	**F**	**N**	**S**	**2**
24VDC	**J**	**K**	**L**	**P**	**T**	**3**
No resistor	**U**	**V**	**W**	**Y**	**Z**	**-**

LED consumption : 20mA @ nominal voltage (25°C)
Other illumination solutions : on request.

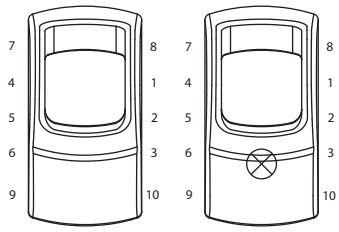

Side B

WIRING

The LED wiring diagram is shown on the case.

CASE + LED

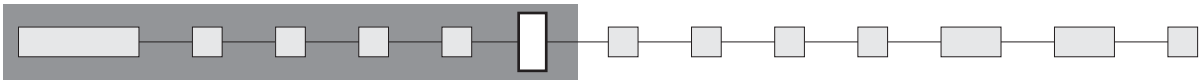

- **For 6 terminal versions** LED connected to the load

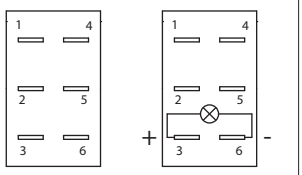

A (standard)

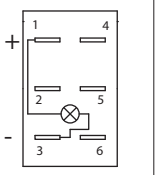

B

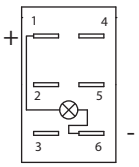

C

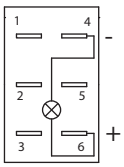

E

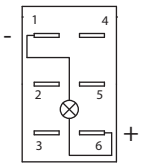

F

Note : If not available, terminals are added to connect the LED.

- **For 10 terminal versions** Independent LED or integrated functions

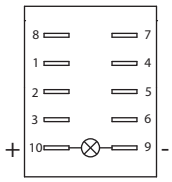

G (standard)

To have independent LED.

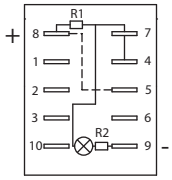

H

To obtain 2 symbol illumination levels (night illumination when OFF and higher illumination when ON).
Dotted line = external wiring, continuous line = internal wiring

Available in Single Pole only, with H and J quick-connect terminals.

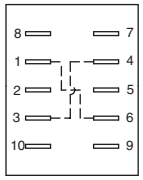

I

To have a polarity inversion (typical application : fan motor).
Dotted line = external wiring

Power supply betweeen 2 and 5 - Load between 1 and 4 or 3 and 6.
Available with H and J quick-connect terminals.

Please contact us for other wiring solutions.

ACTUATOR TYPE

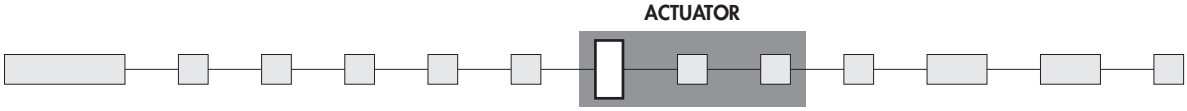

1 For non-illuminated application
2 For illuminated application

ROCKER COLOUR

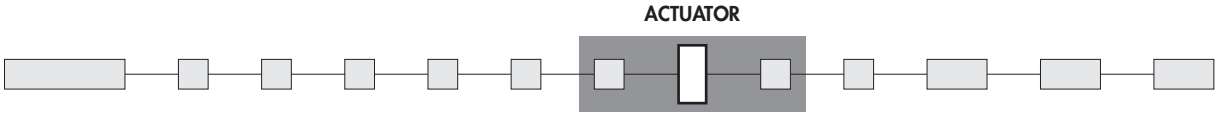

Code	Colour
1	Blue
1/4	Dark blue
2	Black

Code	Colour
3	Green
4	Grey
5	Yellow

Code	Colour
6	Red
7	Ivory
9	Orange

Note : colour 7 not available on illuminated versions

UNLOCKING ACTUATOR COLOUR

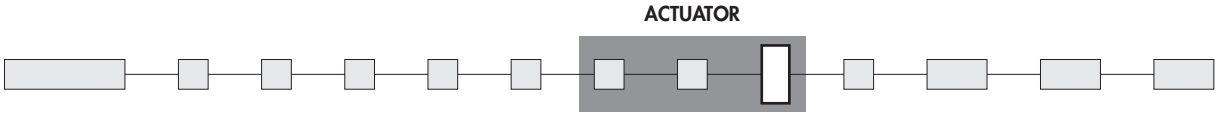

Code	Colour
1	Blue
1/4	Dark blue
2	Black

Code	Colour
3	Green
4	Grey
5	Yellow

Code	Colour
6	Red
7	Ivory
9	Orange

MARKING ORIENTATION

If no marking required, leave box blank.

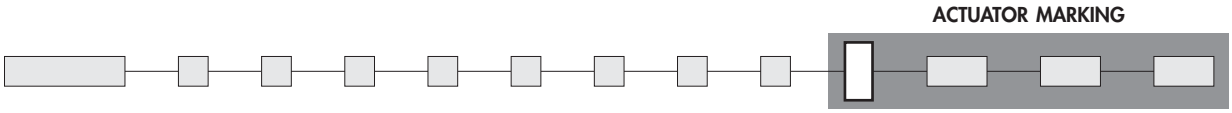

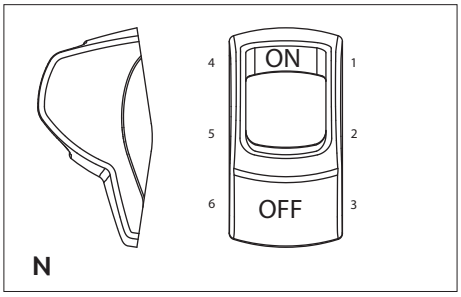

Other orientations : on request

KL series

Locking power rocker switches

Marking - Mounting

SYMBOLS

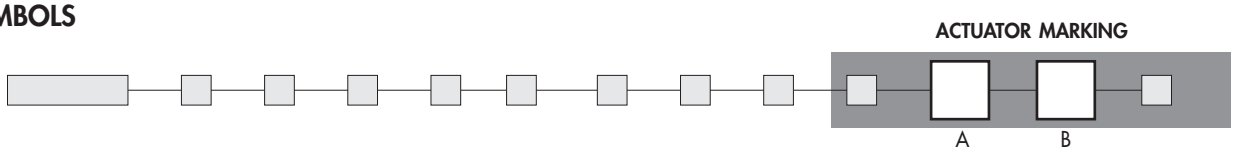

XX No symbol

Available symbols : see end of section D.

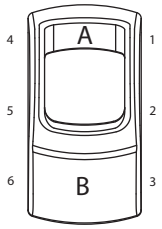

Laser etching resistance
- Water and petrol resistant acccording to EN61058-1
- Tear resistant (cross-cut test) according to NF ISO 2409 : class 0
- UV resistant according to ISO 4892-2

Marking area - The symbol will be included in the hatched area.

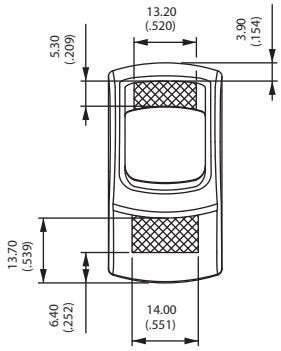

For illuminated versions

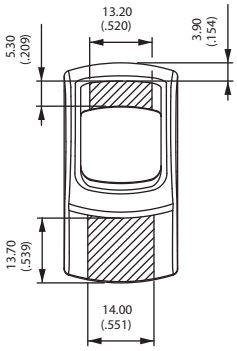

For non-illuminated versions

MARKING COLOUR

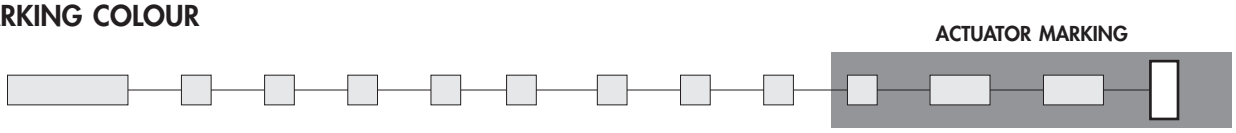

Illuminated models (laser etching)
Blank White

Non-illuminated models (pad printing)
1 : Blue - **2** : Black - **3** : Green - **4** : Grey - **5** : Yellow - **6** : Red - **7** : White - **9** : Orange

SWITCH PANEL CUT-OUT

Panel thickness : 0,8 mm to 4,6 mm

Recommended panel thickness : between 2 mm and 3,5 mm

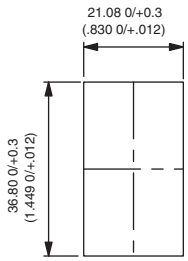

MATRIX MOUNTING

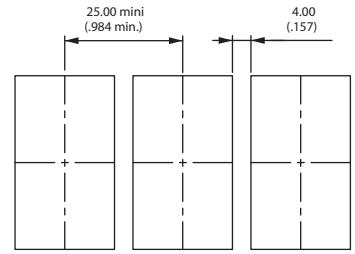

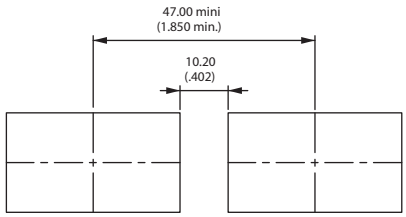

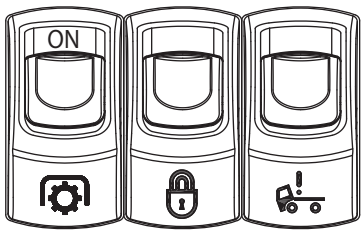

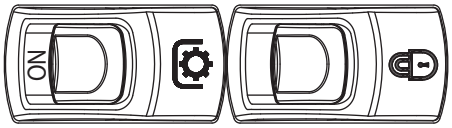

D

KI series

LED indicators

Specifications

- ❑ **Wide choice of bezel colours**
- ❑ **Wide choice of LEDs**
- ❑ **Laser etched symbols**
- ❑ **Long life expectancy**
- ❑ **Optionally sealed to IP68**

ELECTRICAL SPECIFICATIONS

- Operating voltage : 6VDC, 12VDC or 24VDC
- Nominal current : 20mA per LED

ENVIRONMENTAL SPECIFICATIONS

- Degree of protection of sealed versions : frontal sealing to IP68 according to IEC 60529 (submersion under 1 meter of water for more than 30 minutes)
- Salt spray resistance : 96 hours according to IEC 512-6, test 11f
- Operating temperature : -40°C to +85°C

MATERIALS

- Case : ABS
- Bezel : ABS
- Terminals : brass, silver plated

SEALING

Sealing is optional.

To order a sealed product, complete the appropriate box of ordering format on the following pages.

DIMENSIONS

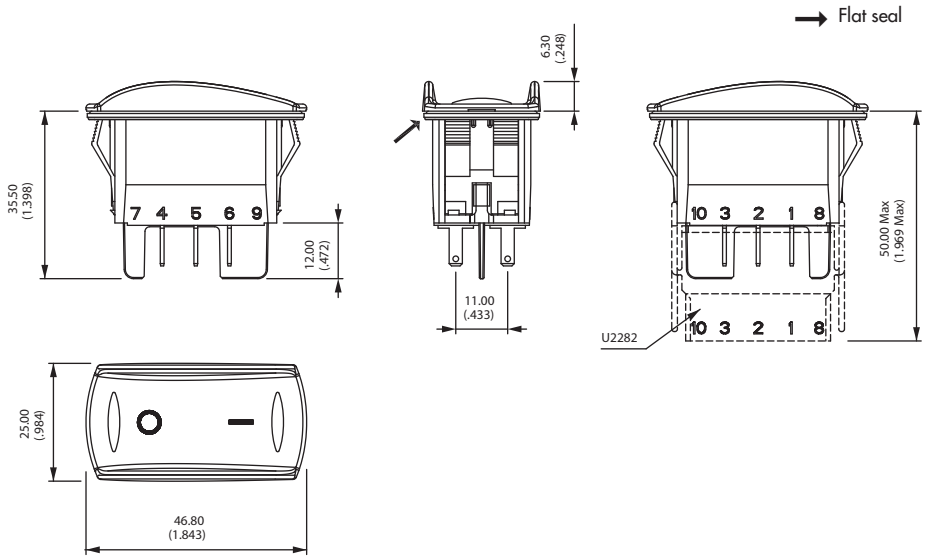

Packaging unit : 40 pieces

Dimensions : First dimensions are in mm while inches are shown as bracketed numbers.

The company reserves the right to change specifications without notice.

KI series

LED indicators

Selection guide

For full series information, please visit our website.

KI		Side A	Side M	Side B			Side A	Side M	Side B		
SERIES	Colours	LEDS			Type of illumination	Marking orientation	Symbols			Terminals with barrier	Sealing

Colours

1	Blue
1/4	Dark blue
2	Black
3	Green
4	Grey
5	Yellow
6	Red
9	Orange

LEDS

X	None
A	LED 6V red
B	LED 6V green
C	LED 6V yellow
M	LED 6V blue
R	LED 6V white
D	LED 12V red
E	LED 12V green
F	LED 12V yellow
N	LED 12V blue
S	LED 12V white
J	LED 24V red
K	LED 24V green
L	LED 24V yellow
P	LED 24V blue
T	LED 24V white

DC voltage standard

Type of illumination

X	Standard
S	Super bright

Symbols

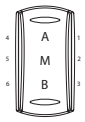

Sealing

X	No
K	Yes

Marking orientation

N

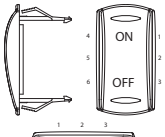

O

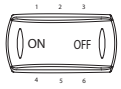

S

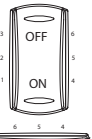

E

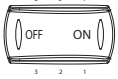

Terminals with barrier

C	Solder lug / quick-connect
F	Quick-connect 6,35
J	Quick-connect 2,8

On request : 48VDC voltage - AC voltage - new design

Symbols & **Accessories** : see end of section D.

⚠ NOTICE : please note that not all combinations of above numbers are available. Refer to the following pages for further information.

D

KG series

Power rocker switches

Distinctive features and specifications

- ❑ **Protected rocker**
- ❑ **Illuminated or non-illuminated**
- ❑ **VDE (EN 61058-1) approved**
- ❑ **Sealed to IP65**

ELECTRICAL SPECIFICATIONS

- Currrent/voltage rating :
  - functions 1 (ON-OFF) and 6 (ON-ON) : 15A 12VDC, 10A 24VDC max., 10mA 14VDC min.
  - functions 4 (ON ON ON) and 4-1R (ON ON MOM) : 8A 12VDC, 5A 24VDC max.
  - other functions : 10A 12VDC, 8A 24VDC max.
- Initial contact resistance : 10 mΩ max. at 1A 2VDC
- Insulation resistance : 1.000 MΩ min. at 500VDC
- Dielectric strength : 2.000 Vrms 50 Hz min. between terminals
- Electrical life : 10.000 cycles min.
- Mechanical life : 2 position models : 100.000 cycles min.
  3 position models : 30.000 cycles min.

ENVIRONMENTAL SPECIFICATIONS

- Degree of protection : IP65 according to IEC 60529
- Shock resistance : 100 g according to IEC 512-4, test 6c
- Vibration resistance : 10-500 Hz - 10 g according to IEC 512-4, test 6d
- Salt spray resistance : 96 hours according to IEC 512-6, test 11f
- Operating temperature : 2 position models : -40°C to + 85°C
  3 position models : -10°C to + 65°C

MATRIX MOUNTING

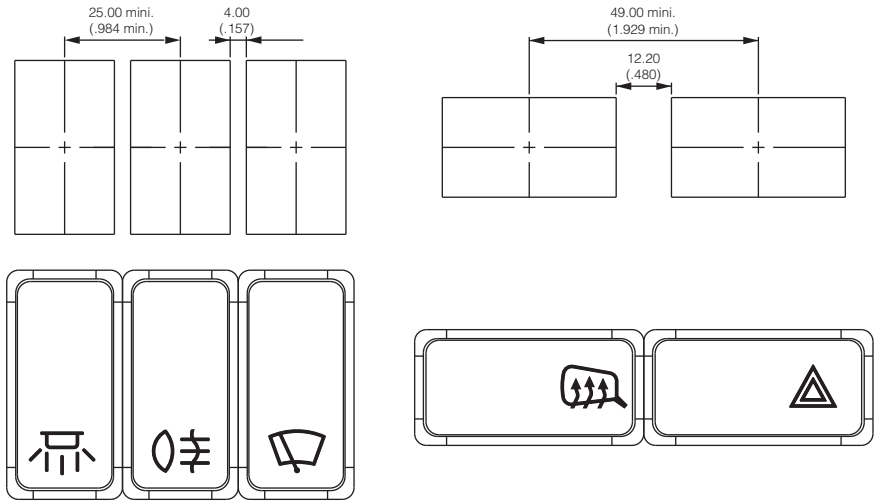

MATERIALS

- Case : thermoplastic UL94-V0
- Terminals : brass, silver plated
- Contacts : silver grain
- Contact roller : brass, nickel plated

AGENCY APPROVAL

EN 61058-1

12(4)A 250VAC
T85/55°C

Availability : double pole models, functions ON-OFF and ON-ON.

Marking : to order switches marked VDE, add "VDE" at the end of model number.

Packaging unit : 40 pieces

Sealing boots are available to protect the switches against dust and water. They are presented in section H.

Dimensions : First dimensions are in mm while inches are shown as bracketed numbers.

The company reserves the right to change specifications without notice.

KG series

Power rocker switches

Case

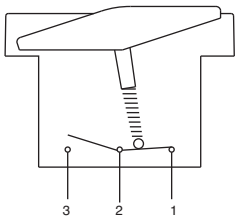

PANEL CUT-OUT

Panel thickness :
0,8 mm to 4,6 mm

Recommended thickness :
between 2 mm and 3,5 mm

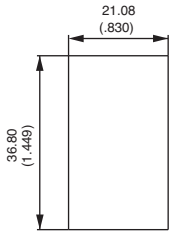

MODEL STRUCTURE

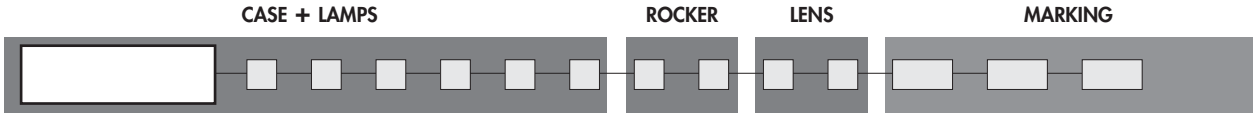

Single pole	Double pole	2-3 / 5-6		1-2 / 4-5
KG31	**KG41**	ON	-	OFF
	KG44*	ON	ON	ON
	KG44-1R*	ON	ON	MOM
KG35	**KG45**	MOM	-	ON
KG36	**KG46**	ON	-	ON
KG37	**KG47**	MOM	OFF	MOM
KG38	**KG48**	ON	OFF	MOM
KG39	**KG49**	ON	OFF	ON

* Function 4 : single pole in double pole case

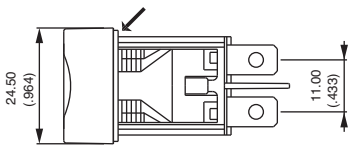

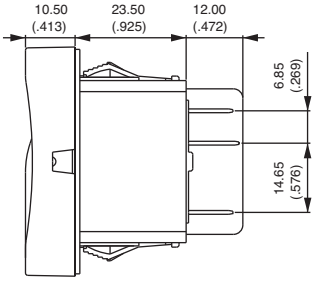

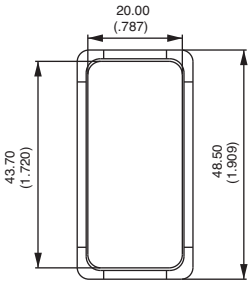

TERMINALS

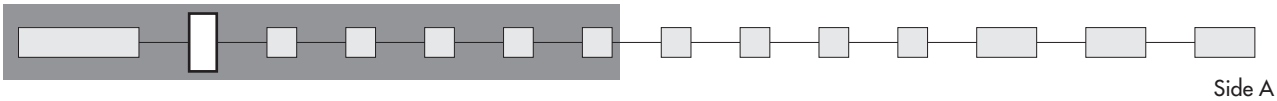

Side A

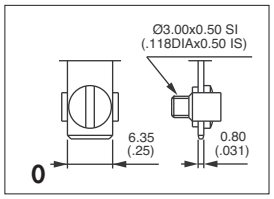

Screw

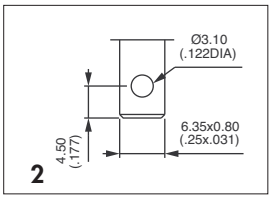

Solder lug / quick-connect

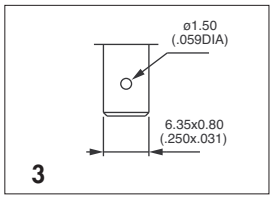

Quick-connect

Terminals 1 to 6
are marked on the case.

Side A : terminals 1 and 4
Side B : terminals 3 and 6

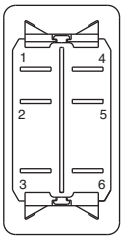

Side B

CONTACT MATERIALS

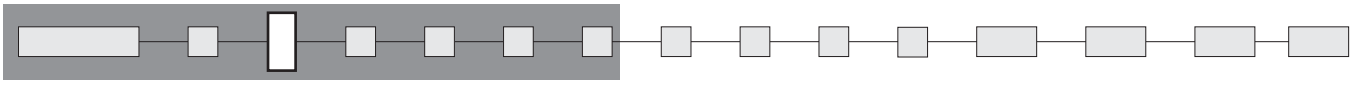

A Silver grain

BEZEL

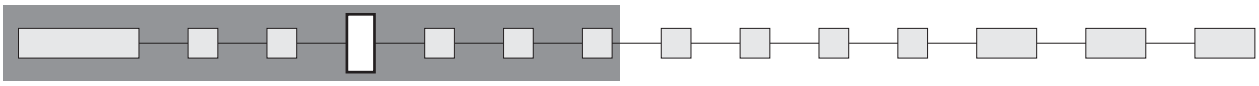

2 Black, sealed to IP65

LAMPS

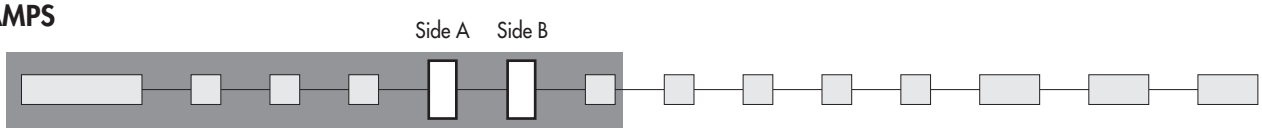

Complete each enlarged box with one of the codes listed below.

X	Without lamp
A	6V LED red
B	6V LED green
C	6V LED yellow
D	12V LED red
E	12V LED green
F	12V LED yellow
G	18V LED red
H	18V LED green
I	18V LED yellow

J	24V LED red
K	24V LED green
L	24V LED yellow
M	Neon 125V
N	Neon 250V
O	Filament 6V
P	Filament 12V
R	Filament 24V
S	Fluorescent 220V
T	Fluorescent 110V

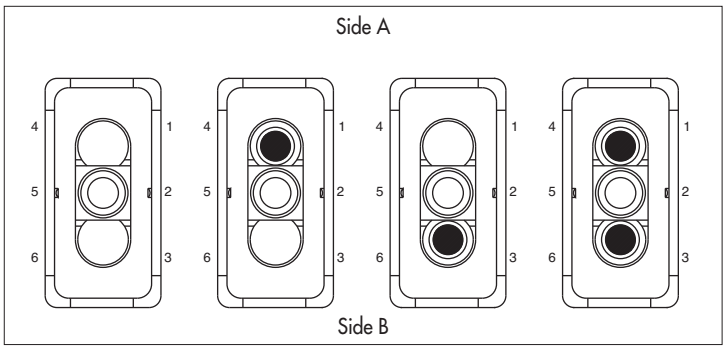

White and blue LEDs : on request.

LAMP WIRING

The lamp wiring diagram is shown on the case.

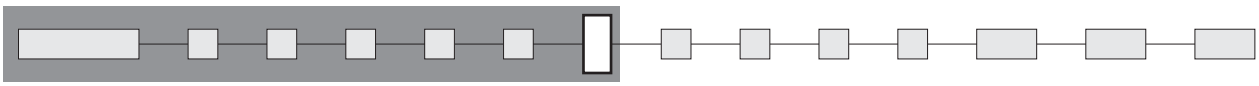

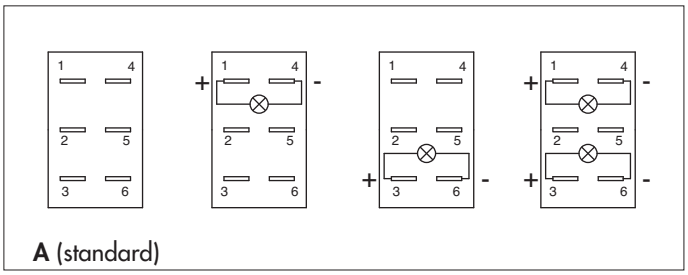

A (standard)

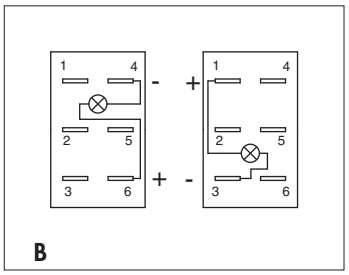

B

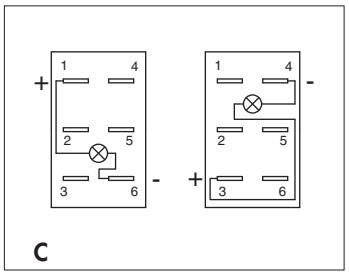

C

Note : If not available, terminals are added to connect the LED.

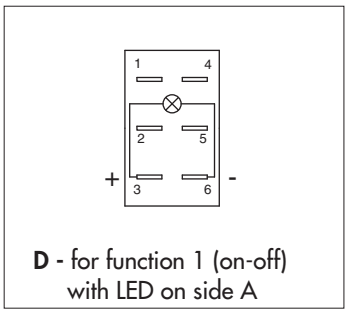

D - for function 1 (on-off) with LED on side A

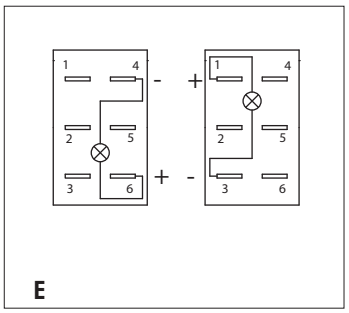

E

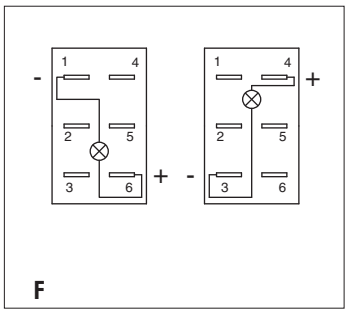

F

To order case only (without rocker), finish your order number with the lamp wiring code.

KG series

Power rocker switches

Rocker - Lenses

ROCKER COLOUR

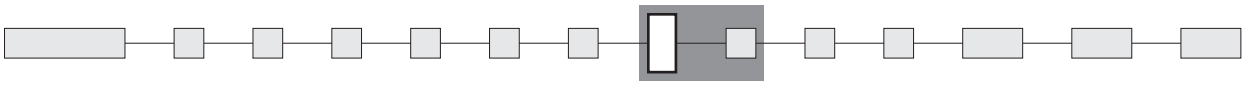

1	Blue
1/4	Dark blue
2	Black
3	Green
4	Grey

5	Yellow
6	Red
7	Ivory
9	Orange

ROCKER SHAPE

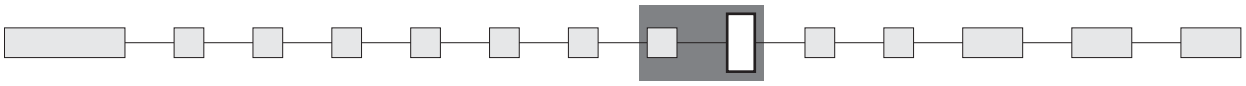

1
Full rocker

4
Opening on side A

6
Opening on side B

8
Opening on sides A and B

Other rocker shapes on customer specifications : on request.

To order rocker only (without case), begin the order number with code KGR, then follow the order format from "rocker colour" until the end of the options.

LENS COLOUR

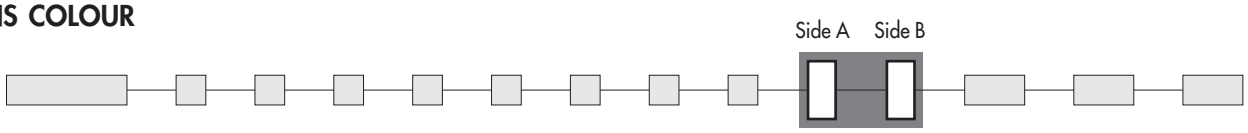

Complete each enlarged box with one of the codes listed below.

X	No lens
1	Blue *
3	Green *
6	Red
9	Orange
B	White
T	Translucent

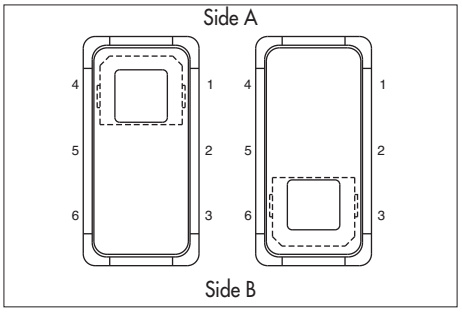

* Blue or green lens recommended with fluorescent lamp.

To order lenses only, begin the order number with the codes :
KGLA for lens A and KGLB for lens B,
then follow the order format from "lens colour" until the end of the options.

MARKING

If no marking required, leave all boxes blank.

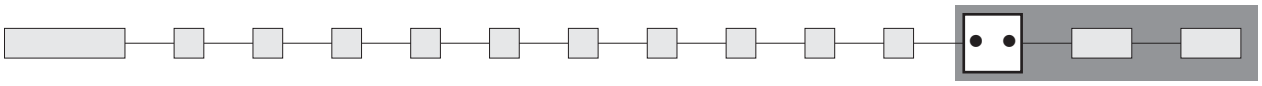

Select one option from each of the tables below.

MARKING METHOD	
C	Hot stamping

MARKING ORIENTATION

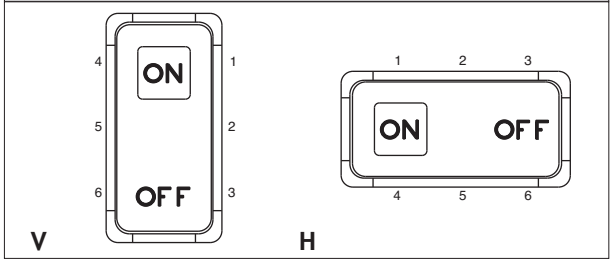

Other orientations : on request

SYMBOLS

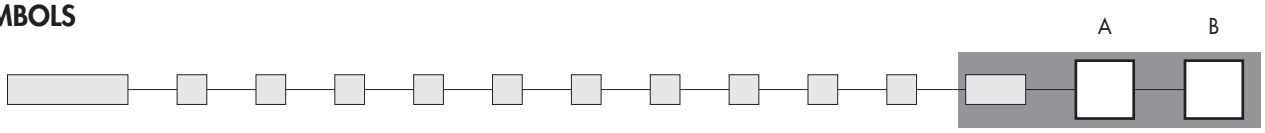

XX No symbol

Available symbols : see end of section D.

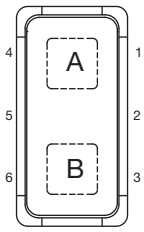

Marking colour
White marking for black rockers - Black marking for colour rockers
Other : on request.

Marking area
For illuminated versions. The symbol will be included in the hatched area.

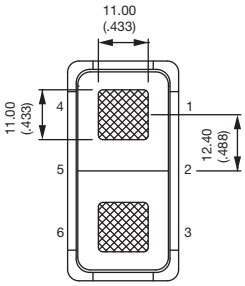

K range

Power rocker switches and indicators

Symbols

Most symbols meet the ISO 7000 standard "graphical symbols for use on equipments" (code given in bracket in the description). Contact us for symbols not featured in the following tables.

Legend scale :
KR series : 1:1
KL, KG and KI series : depending on space available on the product (see "Symbols" section at the end of each series).

CODE	SYMBOL	DESCRIPTION
XX	None	-
01	ON	-
02	OFF	-
03	O	-
04	I	-
05	II	-
06	STOP	-
07	A	Stop
08	M	Motion
09		Up motion
10		Down motion
11		Hot
12		Cold
13		Hazard warning (0085)
14		Traveller lighting
15		Driver lighting (1421

CODE	SYMBOL	DESCRIPTION
16		Revolving light
17		Rear ventilator
18		Heating (0637)
19		Door opening
20		Windshield demister/defroster (0635)
21		Windshield wiper (0086)
22		Windshield washer (0088)
23		Ventilator fan (0089)
24		Side mirror defroster
25		Restarting pump
26		Front fog lights (0633)
27		Rear fog lights (0634)
28		Propulsion system trim
29		Beacon (1141)
30		Anchor
31		Electric motor (0011)

CODE	SYMBOL	DESCRIPTION
32		Emergency first aid vehicle (2565)
33		Load tipping (1557)
34		Loading light (2457)
35		Tractor, rear-ward (1667)
36		Combine, direction of movement (1678)
37		Use no forks (2406)
38		Transmission (1166)
39		Working spot light (1145)
40		Engine (0640)
41		Horn (0244)
42		Lock (1656)
43	TAXI	Taxi sign light (2551)
44		Working light (1204)
45		Working light symmetric (1204)
46		-
47	ASM	-

D

Most symbols meet the ISO 7000 standard "graphical symbols for use on equipments" (code given in bracket in the description). Contact us for symbols not featured in the following tables.

Legend scale :
KR series : 1:1
KL, KG and KI series : depending on space available on the product (see "Symbols" section at the end of each series).

CODE	SYMBOL	DESCRIPTION
48		All wheel drive
49		Differential lock (1662)
50	TOP	-
51	1000	-
52	540E	-
53	N	-
54		Rear window wiper (0097)
55		Rear window washer (0099)
56		Lower load (2223)
57		Cab lock (1560)
58		Extraction
59		Pumping in
60		Rear PTO (1572)
61		Front PTO
62		Rockshaft down
63		Rockshaft up

CODE	SYMBOL	DESCRIPTION
64		Indicator
65		Brake release
66	L	Baggage room left door
67	R	Baggage room right door
68		Power blinds
69	idle/diag	Engine idle control
70	CRUISE RES/SET	Cruise res/set
71		Driver windows up/down
72	2	Middle door opening
73	1	Front door opening
74		Lighting in baggage room
75	CRUISE ON/OFF	Cruise on/off
76	TV	TV
77		Pump
78	WC	Toilet
79	WC	Toilet decontamination

CODE	SYMBOL	DESCRIPTION
80		Front windshield heating
81	AUS	Aus
82		Radiator fan
83		Remove retarder
84		Restricted speed
85		Preheater
86	ABS	ABS detection
87	ECAS	ECAS detection
88		Engine stop
89	CRUISE RES/CAN	Cruise res/cancel
90		ECAS reset
91		Driver windows heating
92	CRUISE SET+/SET-	Cruise set
93		Air bag up/down
94		Read lighting
95		Lighting main switch

D

K range

Power rocker switches and indicators

Symbols

Most symbols meet the ISO 7000 standard "graphical symbols for use on equipments" (code given in bracket in the description). Contact us for symbols not featured in the following tables.

Legend scale :
KR series : 1:1
KL, KG and KI series : depending on space available on the product (see "Symbols" section at the end of each series).

CODE	SYMBOL	DESCRIPTION
96		Heating using water
97		Low beam
98		Position lights
99		Diesel acceleration
A1		Manual mode
A2		Clockwise cabin rotation
A3		Anticlockwise cabin rotation
A4		-
A5		-
A6		Parking brake
A7		-
A8		-
A9		-
AA		-
AB		-
AC		-

CODE	SYMBOL	DESCRIPTION
AD		-
AE		-
AF	2	-
AG		Battery charging condition (0247)
AH		Turn signals (0084)
AJ		High beam (0082)
AK		Differential lock, bogie (2600)
AL		Brushing with a rotating brush (0070)
AM		Differential lock, transfer case 4x4 (2475)
AN		Loader bucket, float (1441)
AP		Loader bucket (1437)
AQ		Rear window washer & wiper (0098)
AR		Header Header drive (1579)
AS		Excavator/backhoe boom side shift (2091)
AT		Chemical water treatment (1851)
AU		Grapple skidder, single funct° boom (1762)

CODE	SYMBOL	DESCRIPTION
AV		-
AW		-
AY		-
AZ		-
B1	HIGH	-
B2	LOW	-
B3	2 1	-

D

MOUNTING PANEL END

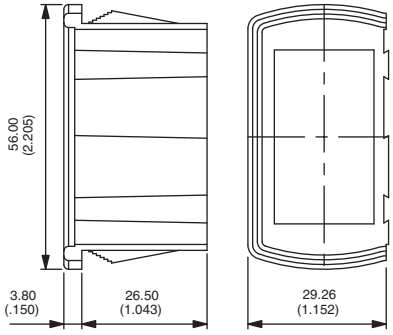

U2261

MOUNTING PANEL MIDDLE

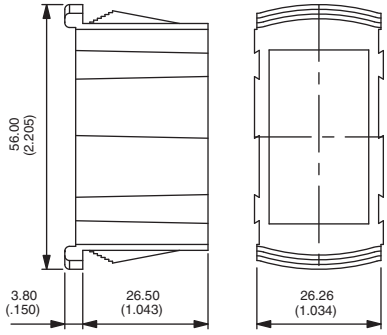

U2262

SINGLE MOUNTING PANEL

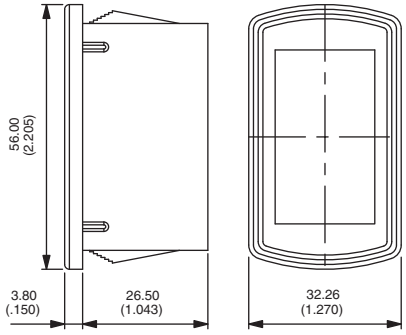

U2267

Recommended panel thickness : 1,10 mm - 1,80 mm - 2,60 mm - 3,40 mm - 4,20 mm - 5 mm - 5,80 mm

MOUNTING PANEL CUT-OUT

For additional elements, add 26,40 mm (1.039)

For 1 element U2267

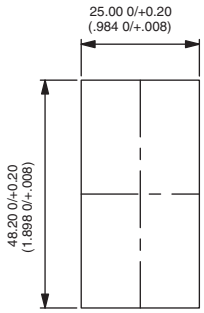

For 2 elements U2261

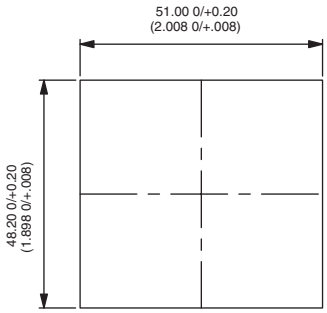

For 3 elements (2xU2261 + 1x U2262)

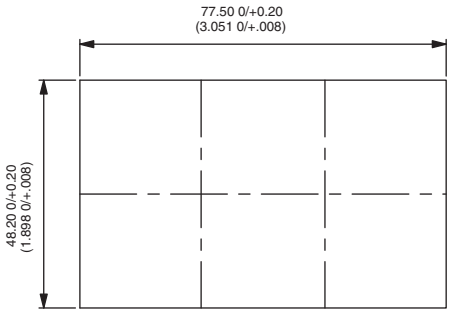

22 x 44 ADAPTER

Front panel dismounting

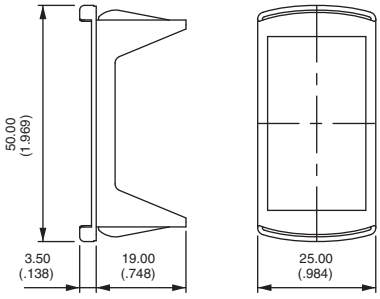

U3060

Recommended panel thickness : 0,60 mm to 1,50 mm

22 x 44 ADAPTER

Rear panel dismounting

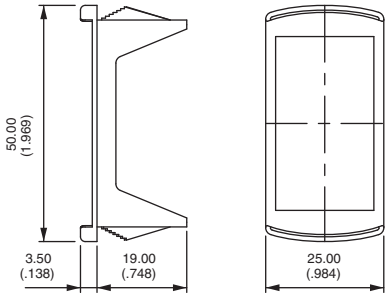

U3070

Recommended panel thickness : 1,60 mm -0,1/0 to 5,60 mm -0,1/0 in stages of 0,40 mm

PANEL CUT-OUT

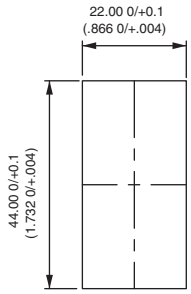

Adapter colours (replace 0 with code)
1/4 : dark blue - **2** : black - **4** : grey
5 : yellow - **6** : red - **7/1** : white

D

ACTUATOR REMOVING TOOL

U3052

2 tools are supplied

EXTRACT ACTUATOR (KR ONLY)
Allows the extraction of the rocker / rocker support assembly.
Place the 2 claws under the support and push as indicated by the arrow.

EXTRACT ROCKER (KR ONLY)
Allows to separate the rocker from its support.
Insert the tool between rocker and support as indicated by the arrrow. Pull out the tool in the opposite direction.

EXTRACT SWITCH (KR, KL AND KI)
Allows to extract switch from panel mounting units. 2 tools are necessary.
Insert the tools between switch and panel mounting units from the rear to compress the snap-in device. Pull off switch manually.

CONNECTORS

Standard colour : black. Other colours : on request.
Connectors cannot be combined with wiring types H and I.

D

U2260

6 terminal version
For use with terminals type 2, 3, 4 or 5.
6,35 (1/4) tabs to be fitted by the user (example : TE42282-2).
Can be used for the KG series.

U2282

10 terminal version
For use with terminals type H or J.
2,8 (.110) tabs to be fitted by the user (example : AMP/Tyco 0-927779-3).

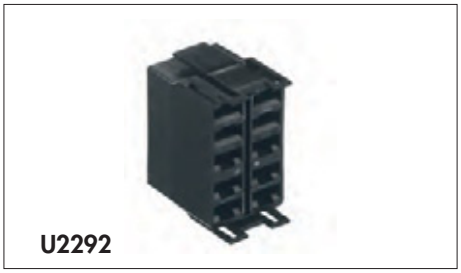

U2292

10 terminal version
For use with terminals type B, C, E or F.
6,35 (1/4) tabs to be fitted by the user (example : TE42282-2).

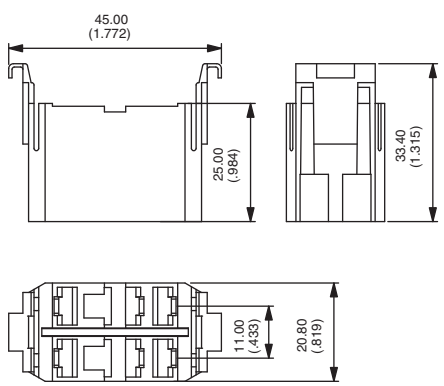

U2260

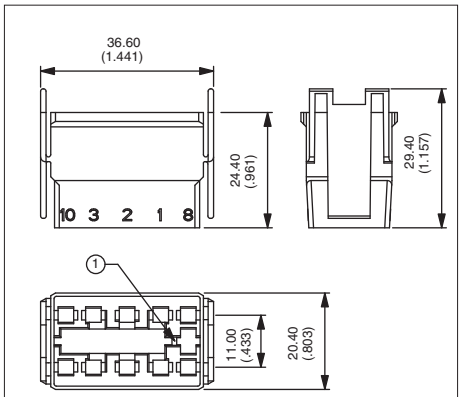

U2282

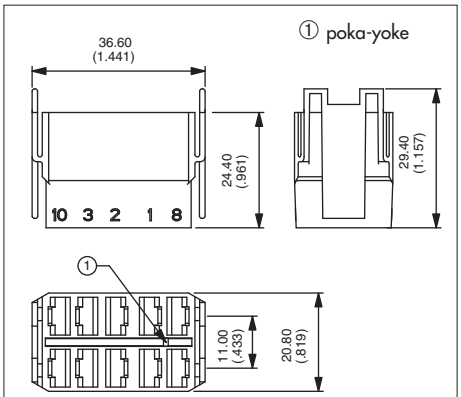

U2292

HOLE PLUGS

Usefull for future extensions.

Code	Colour
U2271	Blue
U2271/4	Dark blue
U2272	Black
U2273	Green

Code	Colour
U2274	Grey
U2275	Yellow
U2276	Red
U2277	Ivory
U2279	Orange

Recommended panel thickness :
1,50 mm to 6 mm

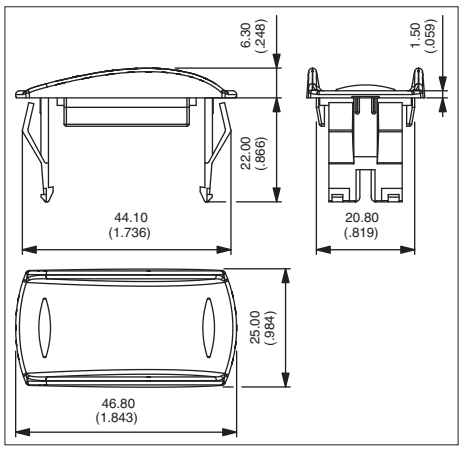

Connectors can be hanged on specific hole plugs. Contact APEM.

D

Slide switches

Section E

E

NK series

Subminiature slide switches

- ❑ **The smallest changeover**
- ❑ **Flush and raised actuators**

ELECTRICAL SPECIFICATIONS

- Max. current/voltage rating with resistive load : 0,5A 12V
- Minimum load : 1mA 10mV
- Initial contact resistance : 20 mΩ max.
- Insulation resistance : 10.000 MΩ min. at 500VDC
- Dielectric strength : 250 Vrms. 50 Hz min. between terminals
  2.000 Vrms 50 Hz min. between adjacent poles of switches placed side by side
- Electrical life with nominal load : 2.000 cycles
- Capacitance : < 1,5 pF

MATERIALS

- Case : PA6/6, glass filled, UL94-V0
- Actuator : PA6/6, glass filled, UL94-V0
- Contacts : gold over nickel

GENERAL SPECIFICATIONS

- Wave solderable : flux sealed
- End stackable, 2,54 (.100) terminal to terminal pitch - 4 switches max., hole dia. 1 mm (.039)
- Travel : 1,6 mm (.062)
- Operating temperature : -40°C to +85°C
- Soldering temperature : 250°C for 5 sec. max.
- Moisture test : 21 days at 95 % RH (IEC 68-2-3)

EXAMPLES OF LAYOUT

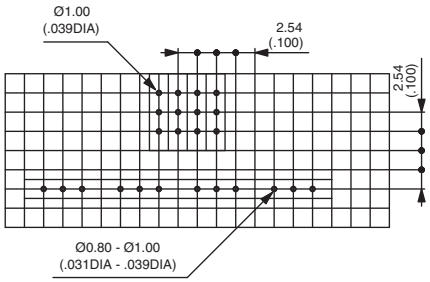

Straight PC terminals

	I 1-3		II 1-2
Flush actuator **NK236**	ON	-	ON
Raised actuator **NK236H**	ON	-	ON

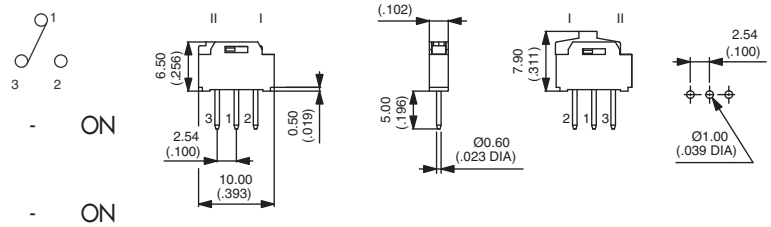

Right angle terminals

	I 1-3		II 1-2
Flush actuator **NK236W**	ON	-	ON
Raised actuator **NK236WH**	ON	-	ON

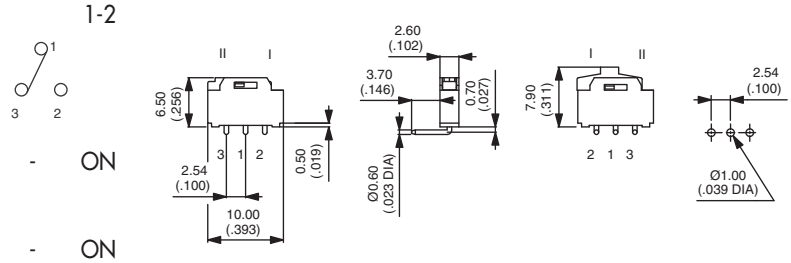

Dimensions : first dimensions are in mm while inches are shown as bracketed numbers.

Packaging unit : 100 pieces.

The company reserves the right to change specifications without notice.

SMT TG series

Surface mount tiny washable slide switches

Distinctive features and specifications

- ❑ **Entirely designed for surface mount**
- ❑ **Tape and reel packaging**
- ❑ **Reflow solderable**
  - High temperature plastic materials
  - Tin plated ground plate
  - Terminal coating : pure tin plating over nickel barrier
  - Terminals turned to the outside, preventing the shadow effect in infrared soldering and permitting visual inspection of solder joints
  - Distance between case and circuit : 0,55 mm (.021)
  - End stackable with 10,16 mm (.40) pitch
  - Available with positioning pins to ensure switch orientation during the reflow process and increasing switch mechanical resistance
- ❑ **Washable**
  Construction withstands cleaning processes, including hot water under pressure

ELECTRICAL SPECIFICATIONS

- Max. current/voltage rating with resistive load : 0,4VA 20V max. AC or DC
- Minimum load : 10mA 50mV or 10µA 5VDC
- Initial contact resistance : 20 mΩ max
- Insulation resistance : 1.000 MΩ min. at 500VDC
- Dielectric strength : 1.000 Vrms. 50 Hz min. between terminals and frame
  500 Vrms. 50 Hz min. between terminals
- Electrical life at full load :
  - 2 position switches : 60.000 cycles
  - 3 position switches : 30.000 cycles

GENERAL SPECIFICATIONS

- Actuator travel : 2,60 mm (.102)
- Operating temperature : -40°C to +85°C
- Moisture resistance : 21days per IEC 512-6 test 11c
- Vibration resistance : 10-500 Hz / 10 g per IEC 512-4 test 6d
- Shock resistance : 50 g per IEC 512-4 test 6c

MATERIALS

- Case : high temperature plastic material UL94-V0
- Actuator : high temperature plastic material UL94-V0
- Ground plate and positioning pins : steel, tin plated
- Contacts : brass, gold plated
- Terminals : brass, with pure tin plating over nickel barrier
- Rubber seal : silicone, transparent

SOLDERING AND CLEANING

- Reflow soldering : infrared, vapor phase or infrared convection
- Washable per IEA-RS448-2 :
  - water + detergent - preferred
  - solvents
- Further information on reflow soldering : see end of catalogue.

Dimensions : First dimensions are in mm while inches are shown as bracketed numbers.

PACKAGING

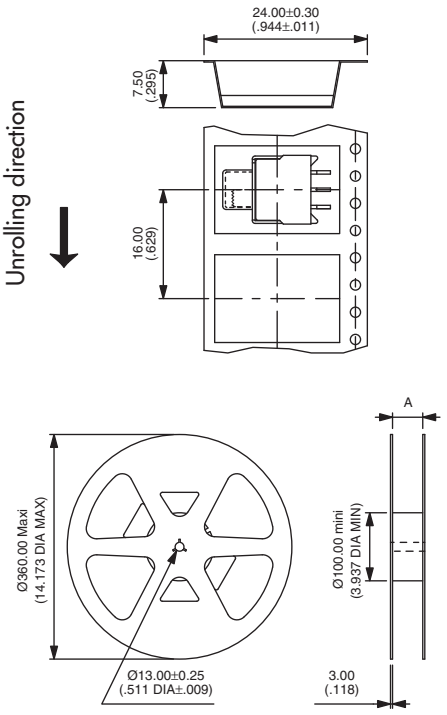

Tape width	24.00 (.944)	44.00 (1.732)
Reel (dimension A)	24.40+2.00/0.00 (.960+.078/.000)	44.40+2.00/0.00 (1.748+.078/.000)

Standard packaging unit : 500 pieces
Tape meeting international standard IEC - Publication 286-3 (EIA481A)
Start leader : 400 mm min.

E

The company reserves the right to change specifications without notice.

SMT TG series

Surface mount tiny washable slide switches

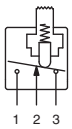

- With or without positioning pins
- Rubber seal removable after cleaning
- Single pole

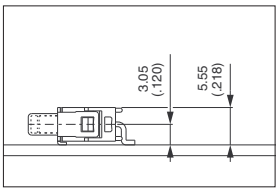

Slide switches

TG36WS80050	ON	-	ON
TG39WS80050	ON	OFF	ON

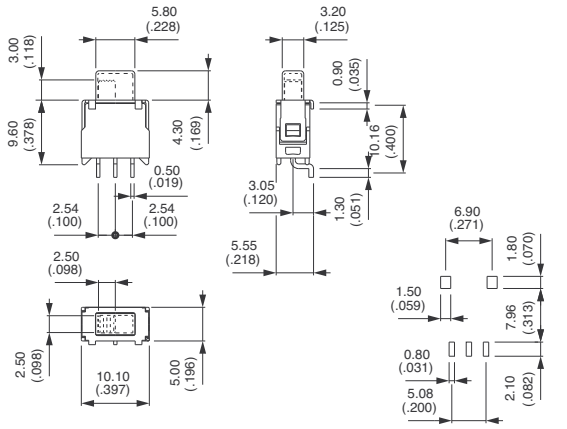

E

Slide switches - with positioning pins

TG36WS80065	ON	-	ON
TG39WS80065	ON	OFF	ON

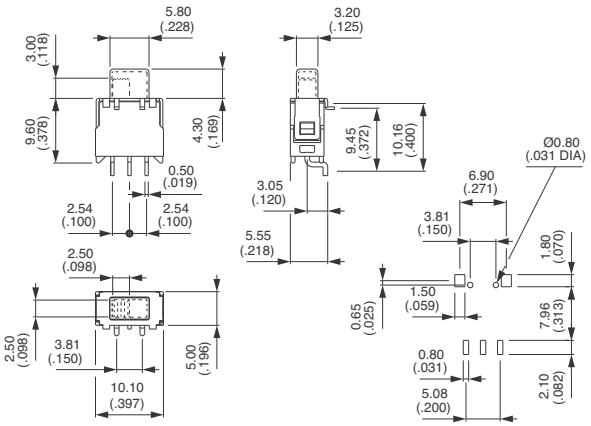

Slide switches with flush actuator

Without positioning pins

TG36WS81050	ON	-	ON
TG39WS81050	ON	OFF	ON

With positioning pins

TG36WS81065	ON	-	ON
TG39WS81065	ON	OFF	ON

Shown without positioning pins
(positioning pins same as above)

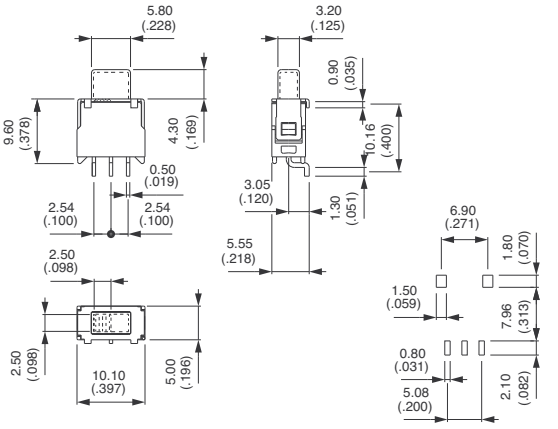

- **Sealed**
  - Single piece case
  - Epoxy sealed terminals
- **Wide variety of contact materials**
- **Same PCB layout as TL, TP and TR tiny series**

SPECIFICATIONS

- Current/voltage rating with resistive load :
  - Gold plated contacts : 0,4VA 20V max. AC or DC.
  - Silver plated contacts : 0,5A 48V max. AC or DC
- Contact resistance : 20 mΩ max.
- Insulation resistance : 1.000 MΩ min. at 500VDC
- Dielectric strength : 1.000 Vrms 50 Hz min. between terminals and frame
  500 Vrms 50 Hz min. between terminals
- Electrical life at full load : 2 position switches : 60.000 cycles
  3 position switches : 30.000 cycles
- Travel : 2,60 mm (.102)
- Operating temperature : -30°C to +85°C
- Cleaning : solvents or water + detergent
- Wave soldering : 260°C - 5 sec. max.

MATERIALS

- Case : flame retardant thermoplastic
- Actuator : thermoplastic
- Ground plate and bracket : brass, tin plated
- Contacts and terminals : see above
- Rubber seal : silicone, transparent
- Terminal seal : epoxy

MODEL STRUCTURE

TG			
SERIES	Number of poles	Electrical functions	Terminals

Number of poles

3	Single pole

Electrical functions

6	ON	-	ON
9	ON	OFF	ON

Terminals

P0	Straight PC
Y0	Straight PC, bracket mounting
W0	Right angle, horizontal mounting
MW	Wire-wrap

OPTIONS

Contact and terminal materials

0	Brass, gold plated (std)
1	Brass, silver plated
3	Brass, gold plated (1,27 µ gold)
8	Contact brass, gold plated + tin plated terminals
9	Contact brass, gold plated (1,27 µ gold) + tin plated term.

Actuators

00	High (standard)
10	Flush

Model

00	Standard
50	Washable

Dimensions : First dimensions are in mm while inches are shown as bracketed numbers.

Packaging unit : 100 pieces, except for models with right angle terminals (50 pieces)

The company reserves the right to change specifications without notice.

TG series

Tiny slide switches

Standard or washable

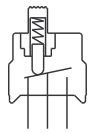

- **Straight PC, right angle or wire-wrap terminals**
- **Single pole**
- **The silicone rubber seal can be removed after cleaning.**

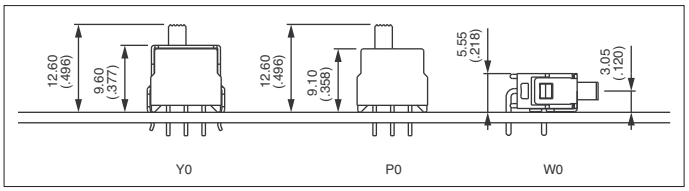

To complete the following part numbers, refer to "Overview" and replace the • symbol with one of the options proposed under "Contact and terminal materials".

Straight PC terminals - standard model

TG36P0•0000	ON	-	ON
TG39P0•0000	ON	OFF	ON

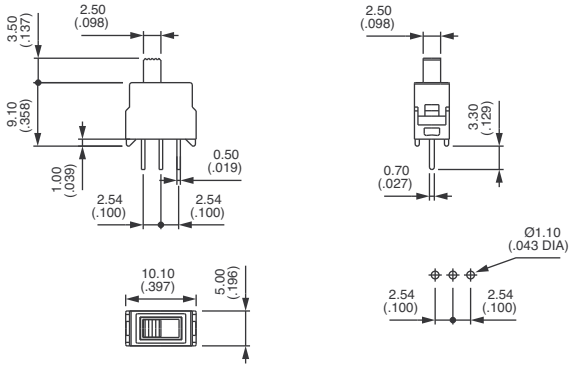

Straight PC terminals - washable model

TG36P0•0050	ON	-	ON
TG39P0•0050	ON	OFF	ON

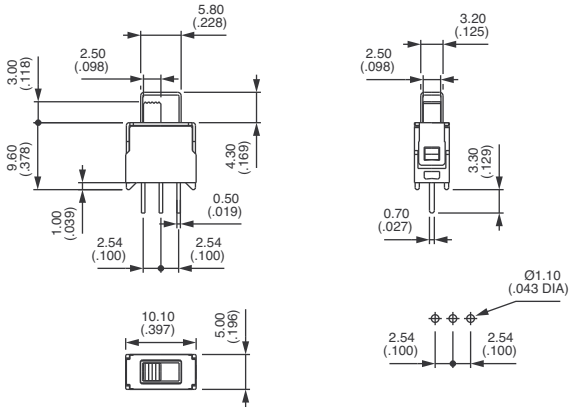

Straight terminals - bracket mounting - standard model

TG36Y0•0000	ON	-	ON
TG39Y0•0000	ON	OFF	ON

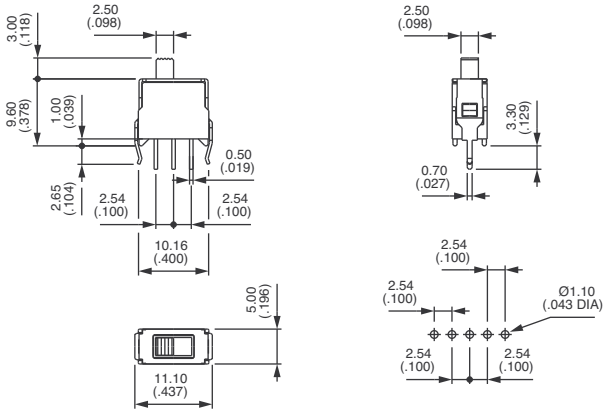

E

Straight terminals - bracket mounting - washable model

TG36Y0•0050	ON	-	ON
TG39Y0•0050	ON	OFF	ON

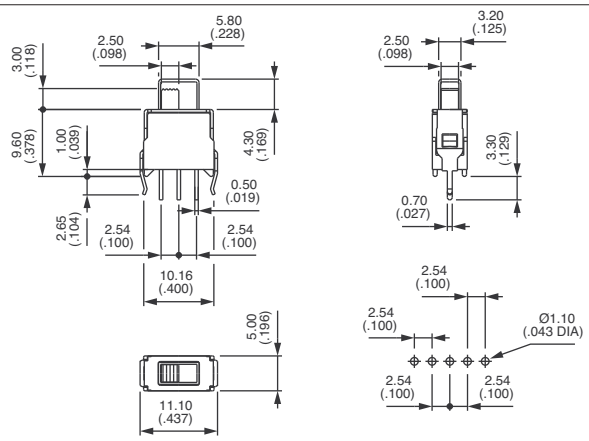

Right angle terminals - horizontal mounting - standard model

TG36W0•0000	ON	-	ON
TG39W0•0000	ON	OFF	ON

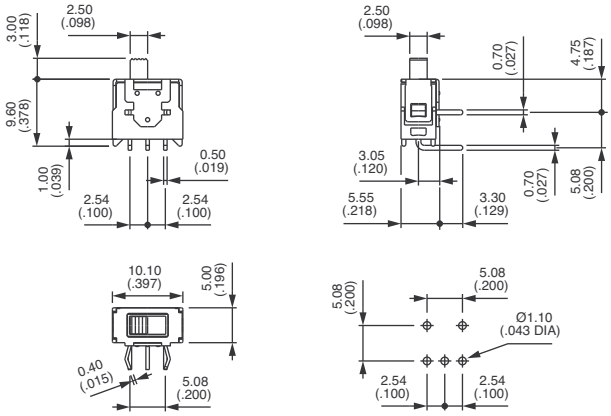

Right angle terminals - horizontal mounting - washable model

TG36W0•0050	ON	-	ON
TG39W0•0050	ON	OFF	ON

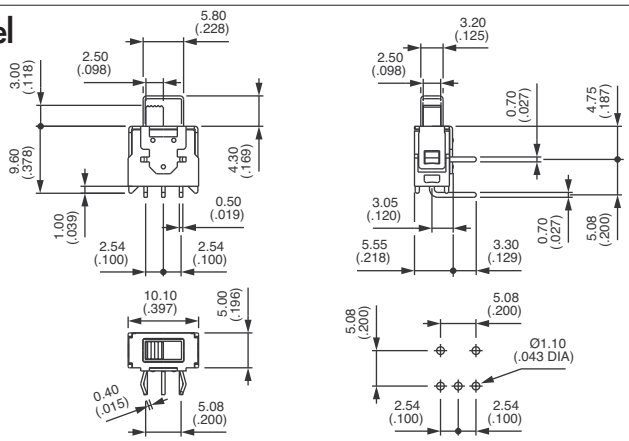

E

OTHER CONFIGURATIONS

MW Wire-wrap terminals

10 Flush actuator

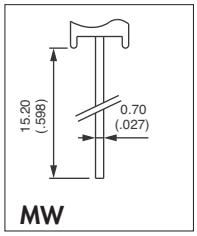

G series

Slide switches - telecom grade

Distinctive features and specifications

- ❑ **Panel and PC mount models**
- ❑ **6 actuator lengths**
- ❑ **Wide variety of contact materials**

ELECTRICAL SPECIFICATIONS

- Max. current/voltage rating with resistive load :
  - silver contacts (codes 1 or 2) : 3A 30VDC
  - gold plated brass contacts (code 0) : 0,4VA 20VAC or DC max.
- Initial contact resistance : 10 mΩ
- Insulation resistance : 1.000 MΩ min.
- Dielectric strength : 1.000 Vrms 50 Hz min.
- Electrical life with resistive load :
  - silver contacts (codes 1 or 2) : 2 positions : 40.000 cycles
    3 positions : 20.000 cycles
  - gold plated brass contacts (code 0) : 60.000 cycles (0,4VA max.)

E

MATERIALS

- Case : PES
- Actuator : polyamide, glass filled
- Cover : stainless steel
- Contacts
  0 : brass, gold plated
  1 : silver
  2 : silver, gold plated
  5 : special contact, lower rating, minimum quantity : consult factory
- Terminal seal : epoxy

GENERAL SPECIFICATIONS

- Travel : 2,20 mm (.086), except actuator N on SP model : 2,60 mm (.102)
- Operating temperature : -30°C to +85°C
- Recommended soldering : 300°C 5 sec. max.

The company reserves the right to change specifications without notice.

MODEL STRUCTURE

G

SERIES

Actuators

C	3,50 mm (.137)
H	5,10 mm (.200) Standard
L	6,40 mm (.251)
B	7,65 mm (.301)
E	9,10 mm (.358)
N	9,50 mm (.374)

Types L, B and E for single pole models only.

Number of poles

3	Single pole
4	Double pole

Electrical functions

6	ON	-	ON
9	ON	OFF	ON

Terminals

S0	Solder lugs
P0	Straight PC
W0	Right angle, horizontal
WW	Right angle, vertical
Y0	Straight PC with short bracket
Y4	Straight PC with tall bracket

OPTIONS

Contact and terminal materials

0	Brass, gold plated
1	Silver
2	Silver, gold plated
5	Special contact, lower rating

Special options 1

00	Standard model
10	Switch without ground plate
11	10,35 mm (.407) PC terminals
12	Same as 11, without ground plate

Special options 2

00	No epoxy seal
01	Epoxy sealed terminals
10	Extended terminals
11	Same as 10, with epoxy seal

E

ABOUT THIS SERIES
On the following pages, you will find successively :
- model structure of switches
- options in the same order as in above chart

Dimensions : first dimensions are in mm while inches are shown as bracketed numbers.

NOTICE : please note that not all combinations of above numbers are available.
Refer to the following pages for further information.

Packaging unit : 100 pieces for SP solder lug (S0) and straight terminal (P0) models.
50 pieces for other models.

G series

Slide switches - telecom grade

MODEL STRUCTURE

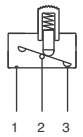

- Solder lug, straight PC or right angle terminals
- Single and double pole configurations

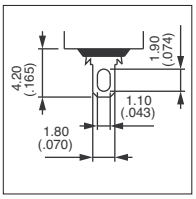

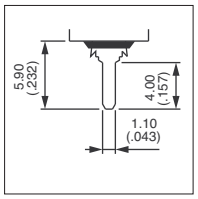

MODEL STRUCTURE

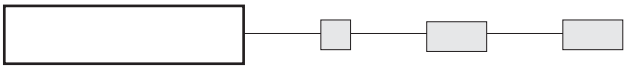

Shown with standard actuator (type H)

Solder lug terminals

Single pole	Double pole			
GH36S0	**GH46S0**	ON	-	ON
GH39S0	**GH49S0**	ON	OFF	ON

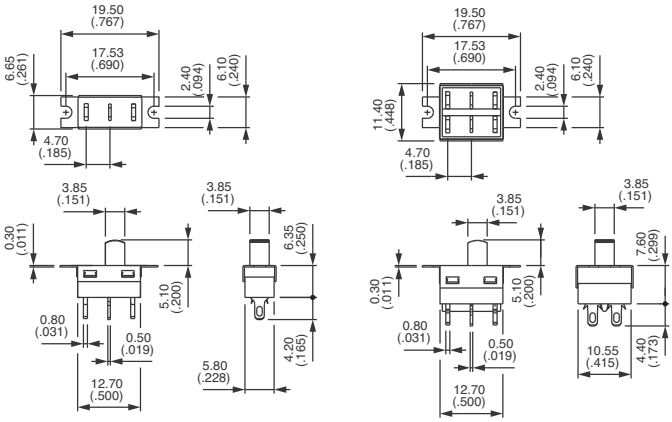

Order with epoxy sealed terminals (option 01).

E

Straight PC terminals

Single pole	Double pole			
GH36P0	**GH46P0**	ON	-	ON
GH39P0	**GH49P0**	ON	OFF	ON

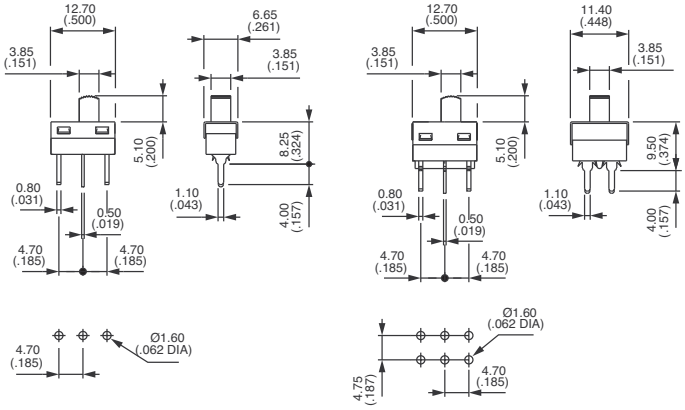

Right angle terminals - horizontal

Single pole	Double pole			
GH36W0	**GH46W0**	ON	-	ON
GH39W0	**GH49W0**	ON	OFF	ON

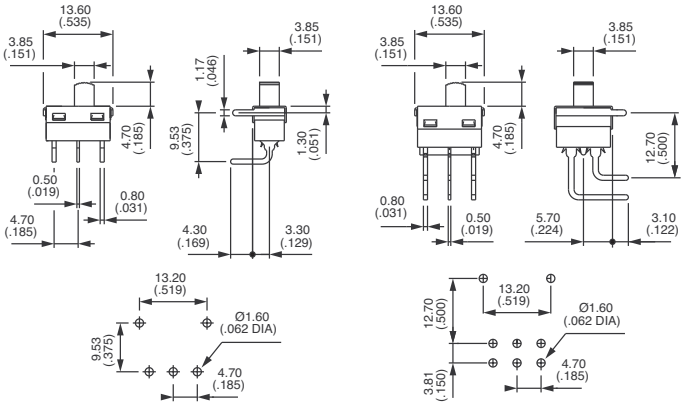

Right angle terminals - vertical

Single pole	Double pole			
GH36WW	**GH46WW**	ON	-	ON
GH39WW	**GH49WW**	ON	OFF	ON

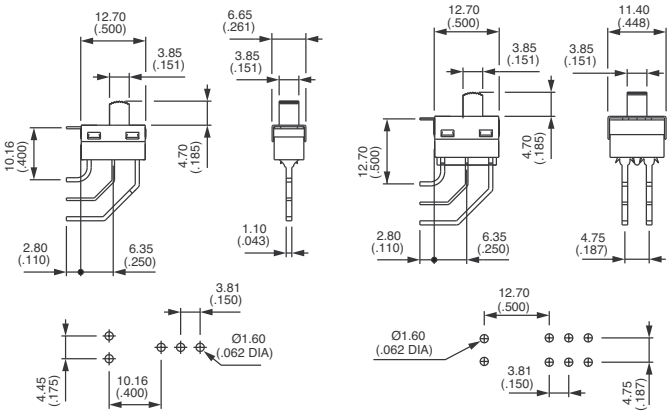

Straight PC terminals - short bracket : Y0

Single pole	Double pole			
GH36Y0	**GH46Y0**	ON	-	ON
GH39Y0	**GH49Y0**	ON	OFF	ON

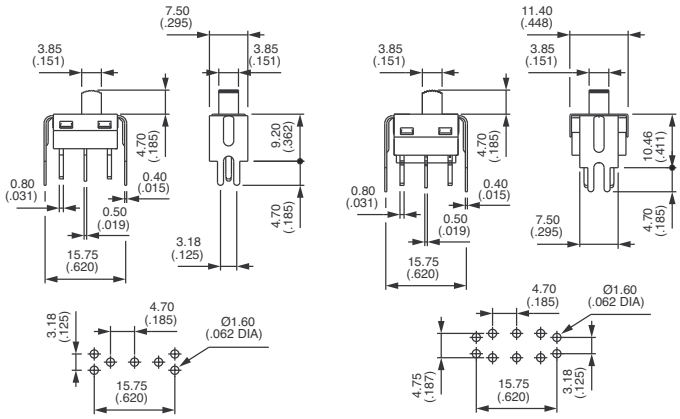

Straight PC terminals - tall bracket : Y4

Single pole	Double pole			
GH36Y4	**GH46Y4**	ON	-	ON
GH39Y4	**GH49Y4**	ON	OFF	ON

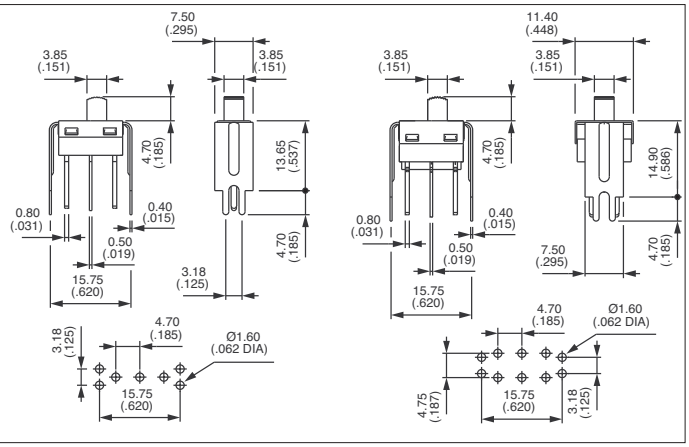

PANEL CUT-OUT

Solder lug model

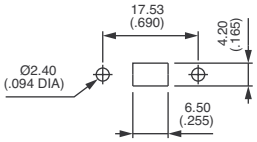

PCB MOUNTING

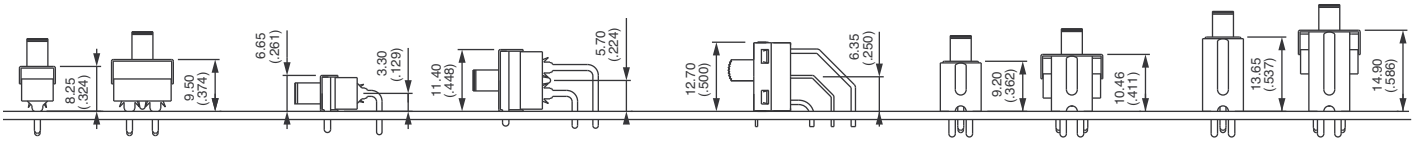

ACTUATORS

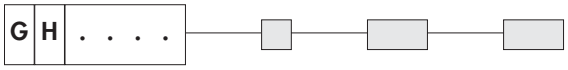

Replace second digit (H) of basic model number with one of the codes below.

Dimensions below are for solder lug (S0) and straight terminals (P0) models.
For other models (WO - WW - Y0 - Y4), height is less 0,4 mm (.015).

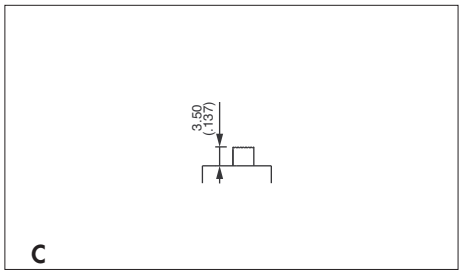

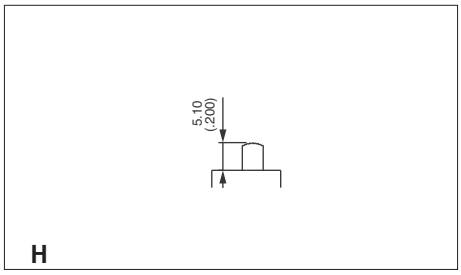

Standard

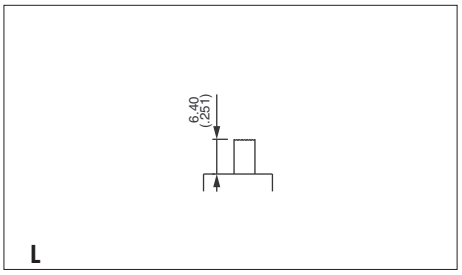

For single pole only

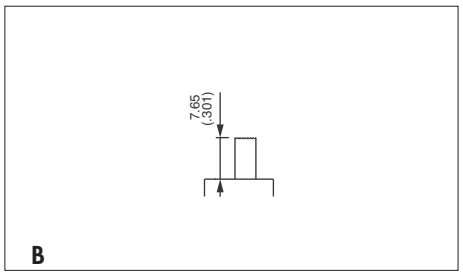

For single pole only

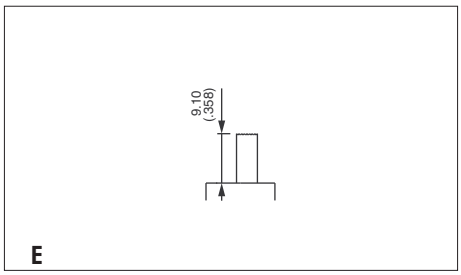

For single pole only

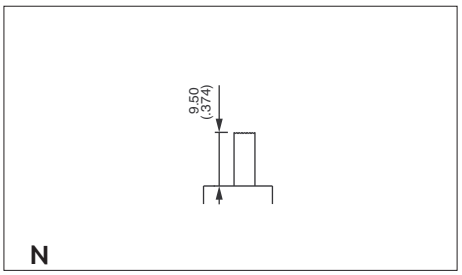

E

CONTACT AND TERMINAL MATERIALS

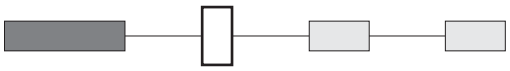

0	Brass, gold plated
1	Silver
2	Silver, gold plated
5	Special contact, lower rating, minimum quantity : consult factory

SPECIAL OPTIONS 1

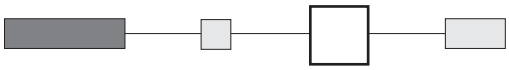

00 Standard switch as presented under "Model Structure"

10 Switch **without ground plate**
For right angle only (W0 and WW models)

11 **10,35 mm (.407) long** PC terminals

12 **10,35 mm (.407) long** PC terminals **without ground plate**

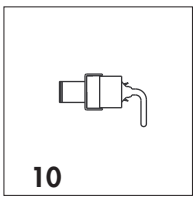

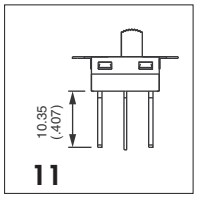

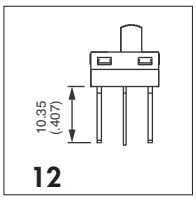

SPECIAL OPTIONS 2

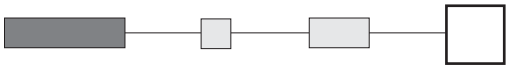

00 No epoxy seal

01 **Epoxy sealed** terminals
(compulsory on solder lug models)

10 **Extended terminals**
For vertical right angle (WW models)

11 **Extended terminals** as above, **with epoxy seal**

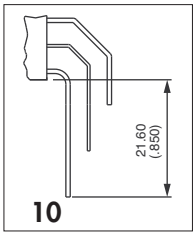

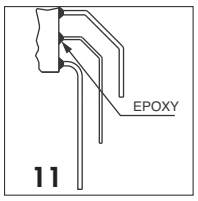

25000N series

Professional slide switches

Distinctive features and specifications

- ❑ **Professional grade slide switches for PC boards**
- ❑ **Approved according to UL 1054**
- ❑ **Wave solderable**
  Not washable in aqueous process
- ❑ **Available with flush, high and side actuator**
- ❑ **Various actuator lengths**

ELECTRICAL SPECIFICATIONS

- Max. current/voltage rating with resistive load :
  - silver contacts (A) : 1A 30VDC
  - gold plated brass contacts (LD) : 100mA 30VDC
- Minimum load :
  - silver contacts (A) : 100mA 10V
  - gold plated brass contacts (LD) : 10µA 5VDC - 10mA 50mV
- Initial contact resistance :
  - silver contacts (A) : 10mΩ max.
  - gold plated brass contacts (LD) : 50mΩ max.
- Insulation resistance : 1.000 MΩ min. at 500VDC
- Dielectric strength :
  1.000 Vrms 50 Hz min. between terminals
  2.000 Vrms 50 Hz min. between poles
  2.000 Vrms 50 Hz min. between terminals and frame
- Electrical life : 10.000 cycles at full load
- Low level or mechanical life : 20.000 cycles

MATERIALS

- Case : PBT
- Actuator : polyamide, glass filled
- Cover : polyamide, glass filled
- Contacts
  A : silver
  LD : brass, gold plated
- Terminal seal : epoxy

APPROVALS

2A 250VAC
4A 125VAC

Availability : consult factory for details of approved models.

Marking : To order switches marked UL, complete the "Options and Approvals" box of ordering format.

GENERAL SPECIFICATIONS

- Operating temperature :
  -40°C to +85°C
- Overall length : 14 mm (.551)
- Actuator height (outside case) :
  - high : 2,80 mm (.110)
  - extra high : 6 mm (.236)
  - side : 2,3 mm (.090)
  - long side : 6 mm (.236)
- Travel : 4 mm (.157)

E

The company reserves the right to change specifications without notice.

MODEL STRUCTURE

25				N
SERIES	Actuator and terminals	Number of poles	Electrical functions	Version

Actuator and terminals

- **1** Flush or high actuator, terminal spacing 2,54 (.100)
- **4** Flush or high actuator, terminal spacing 5,08 (.200)
- **3** Side actuator, terminal spacing 2,54 (.100)
- **5** Side actuator, terminal spacing 5,08 (.200)

Number of poles

- **3** Single pole
- **4** Double pole

Electrical functions

6	ON	-	ON
9	ON	OFF	ON

Version

N
For all models

OPTIONS

Contact materials

- **A** Silver
- **LD** Gold plated brass

Actuator

- **B** Flush
- **H** High
- **H6** Extra high
- **Blank** Side
- **-6** Long side

Options and approvals

- **X601** Special contact : lower rating

Other : see following pages.

E

ABOUT THIS SERIES
On the following pages, you will find successively :
- model structure of switches (including actuator options)
- contact options

Dimensions : first dimensions are in mm while inches are shown as bracketed numbers.

NOTICE : please note that not all combinations of above numbers are available.
Refer to the following pages for further information.

Packaging unit : single pole : 100 pieces - double pole : 50 pieces

25000N series

Professional slide switches

MODEL STRUCTURE

- Epoxy sealed terminals standard
- 1 and 2 pole configurations
- **UL approved models** : see next page.

MODEL STRUCTURE

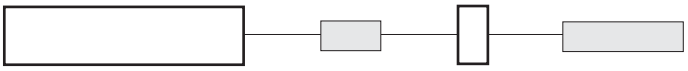

Flush actuator : 25000NB

Terminal spacing 2,54 (.100)	Terminal spacing 5,08 (.200)
Single pole	Single pole
25136N B	**25436N B**
25139N B	**25439N B**
Double pole	Double pole
25146N B	**25446N B**
25149N B	**25449N B**

Shown with 2,54 mm terminal spacing

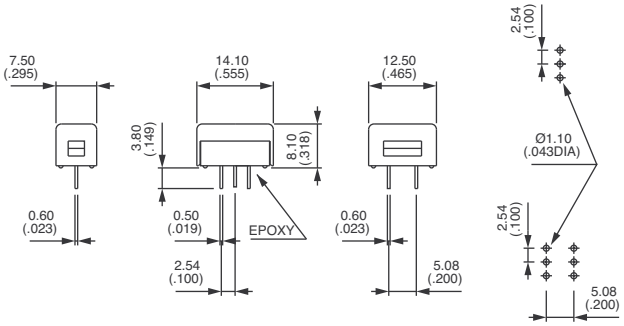

High actuator : 25000NH

Terminal spacing 2,54 (.100)	Terminal spacing 5,08 (.200)
Single pole	Single pole
25136N H	**25436N H**
25139N H	**25439N H**
Double pole	Double pole
25146N H	**25446N H**
25149N H	**25449N H**

Shown with 5,08 mm terminal spacing

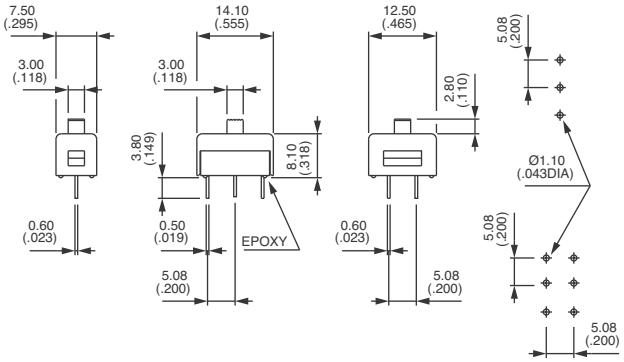

Extra high actuator : 25000NH6

Terminal spacing 2,54 (.100)	Terminal spacing 5,08 (.200)
Single pole	Single pole
25136N H6	**25436N H6**
25139N H6	**25439N H6**
Double pole	Double pole
25146N H6	**25446N H6**
25149N H6	**25449N H6**

Shown with 5,08 mm terminal spacing

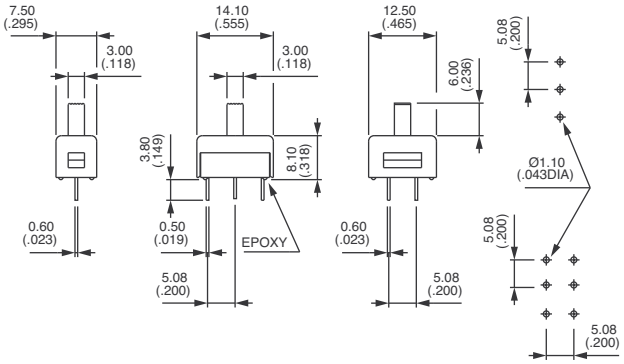

E

Side actuator : 25000N

Terminal spacing 2,54 (.100)	Terminal spacing 5,08 (.200)
Single pole	Single pole
25336N	**25536N**
25339N	**25539N**
Double pole	Double pole
25346N	**25546N**
25349N	**25549N**

Shown with 2,54 mm terminal spacing

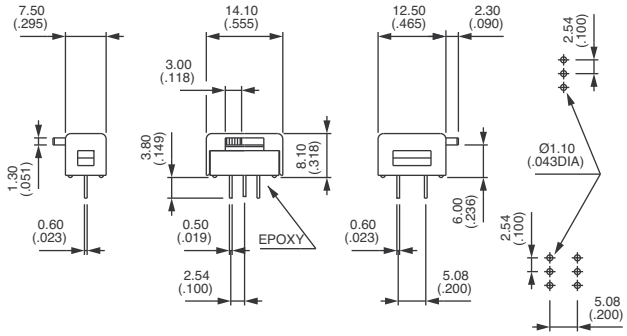

Long side actuator : 25000N-6

Terminal spacing 2,54 (.100)	Terminal spacing 5,08 (.200)
Single pole	Single pole
25336N -6	**25536N -6**
25339N -6	**25539N -6**
Double pole	Double pole
25346N -6	**25546N -6**
25349N -6	**25549N -6**

Shown with 2,54 mm terminal spacing

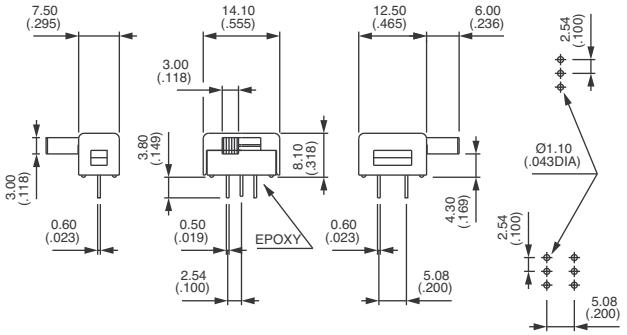

PCB MOUNTING

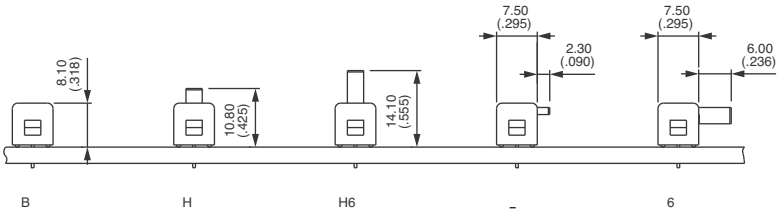

POSITIONS AND CONNECTIONS

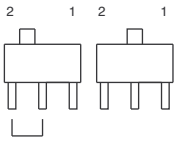

Function 6	ON	-	ON
Function 9	ON	OFF	ON

CONTACT MATERIALS

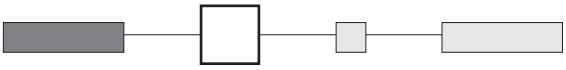

A Silver
LD Brass, gold plated

OPTIONS AND APPROVALS

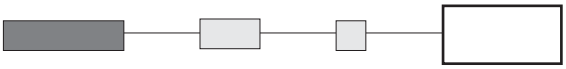

X601 Silver plated brass contacts - Lower rating 3VA 30VDC. Min quantity : 5.000 pieces per model and shipment.
X693 Flame retardant plastic materials
X693UL Switches approved and marked UL (silver contacts only)

Dip and coded rotary switches

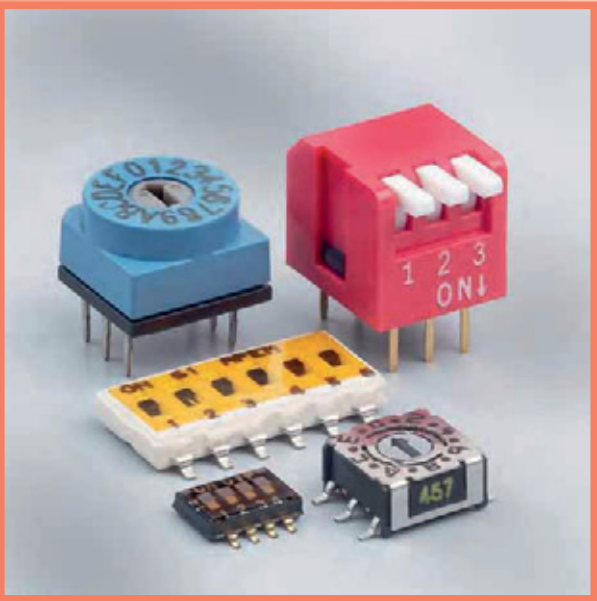

Section F

F

P36 series

Low profile rotary code switches

Surface mount or through-hole

Outside the US and the UK, this series is sold as the CR36 series.

- ❑ 3 actuator types
- ❑ Save board space
- ❑ Highly reliable
- ❑ Solder and flux sealed, washable

P36				
SERIES	Mounting	Actuators	Codes	Terminals

Mounting

(none)	Through-hole
S	Surface mount

Actuators

1	Screwdriver
3	Spindle
8	Slotted spindle

Codes

01	BCD
02	BCD complement
03	Hexadecimal
06	Hexadec. complement

Terminals

(none)	Straight or SMT
V	Crimped
L254	Right angle, spacing 2,54 (.100)

ELECTRICAL SPECIFICATIONS

- Operating voltage : 24 VDC max.
- Contact load, static : 400mA max.
- Contact load, dynamic : 100mA max.
- Initial contact resistance : 100 mΩ max.
- Insulation resistance : 100 MΩ min.

MECHANICAL AND THERMAL SPECS

- Torque : 0,7 Ncm min.
- Expected life : 10.000 cycles min.
- Operating temperature : -30°C to +90°C

MATERIALS

- Base : UL94-V0, high temperature thermoplastic
- Cover : stainless steel
- Actuator : PA 4.6 nylon
- Contacts : gold over nickel plated phosphor bronze
- Terminals : tin plated

SOLDER RECOMMENDATIONS

(DIN CEI 68-2-20)

- Manual soldering : 340°C max.for 2 seconds max.
- Wave soldering : 280°C max. for 5 seconds max.
- Reflow soldering : 260°C max. for 10 seconds max.

F

PACKAGING

P36S1..
1300 pieces per reel
(dim.A = 22,4 mm
dim B = 16,4 mm)

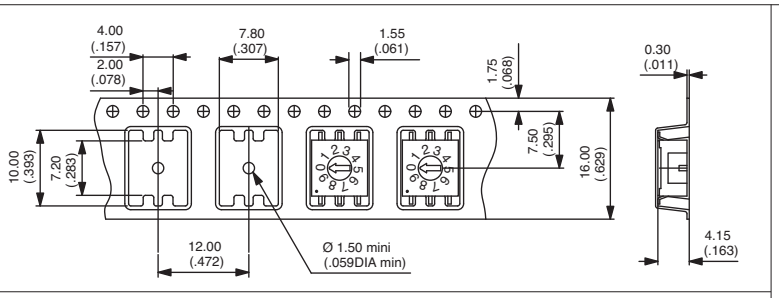

P36S3..
P36S8..
600 pieces per reel
(dim.A = 30,4 mm
dim B = 24,4 mm)

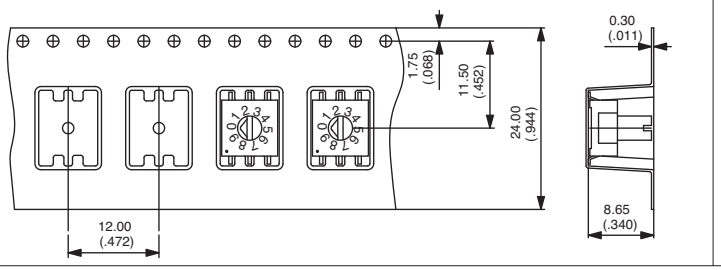

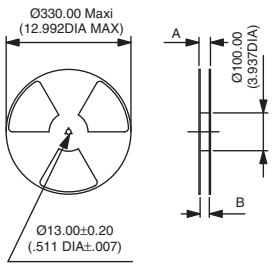

- Reels : see above. To order a SMT product with tape & reel packaging, add "TR" at the end of its part number.
- Tubes : 50 pieces (through-hole or SMT) per tube.

Dimensions : first dimensions are in mm while inches are shown as bracketed numbers.

The company reserves the right to change specifications without notice.

P36 series

Low profile rotary code switches

Surface mount or through-hole

MOUNTING

P36

(none) Through-hole

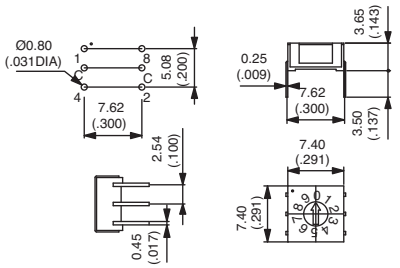

S Surface mount

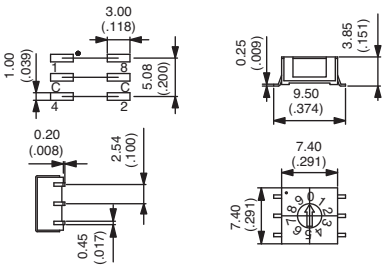

ACTUATORS

P36

1 Screwdriver

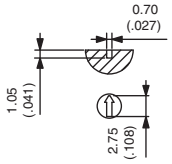

3 Spindle

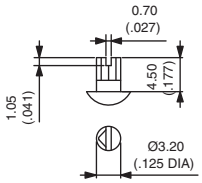

8 Slotted spindle

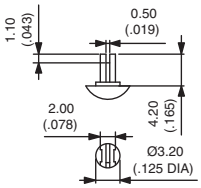

Actuator colour
depending on codes

BCD	red
BCD compl.	orange
Hexadecimal	grey
Hexadec. compl.	white

CODES / TRUTH TABLES

P36

01 BCD

	C	1	2	4	8	
0	●					0
1	●	●				1
2	●		●			2
3	●	●	●			3
4	●			●		4
5	●	●		●		5
6	●		●	●		6
7	●	●	●	●		7
8	●				●	8
9	●	●			●	9

▲ Position ▲ Marking

02 BCD complement

	C	1	2	4	8	
0	●	●	●	●	●	0
1	●		●	●	●	1
2	●	●		●	●	2
3	●			●	●	3
4	●	●	●		●	4
5	●		●		●	5
6	●	●			●	6
7	●				●	7
8	●	●	●	●		8
9	●		●	●		9

03 Hexadecimal

	C	1	2	4	8	
0	●					0
1	●	●				1
2	●		●			2
3	●	●	●			3
4	●			●		4
5	●	●		●		5
6	●		●	●		6
7	●	●	●	●		7
8	●				●	8
9	●	●			●	9
10	●		●		●	A
11	●	●	●		●	B
12	●			●	●	C
13	●	●		●	●	D
14	●		●	●	●	E
15	●	●	●	●	●	F

06 Hexadecimal complement

	C	1	2	4	8	
0	●	●	●	●	●	0
1	●		●	●	●	1
2	●	●		●	●	2
3	●			●	●	3
4	●	●	●		●	4
5	●		●		●	5
6	●	●			●	6
7	●				●	7
8	●	●	●	●		8
9	●		●	●		9
10	●	●		●		A
11	●			●		B
12	●	●	●			C
13	●		●			D
14	●	●				E
15	●					F

TERMINALS

P36

(none) Straight or SMT

V Crimped

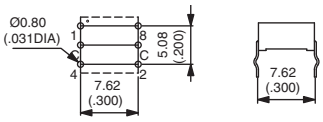

L254 Right angle, spacing 2,54 (.100)

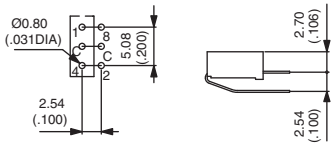

F

PT65 series

Rotary code switches

Through-hole

Outside the US and the UK, this series is sold as the CR65 series with a blue case.

- ❑ **4 actuator types**
- ❑ **Save board space**
- ❑ **Highly reliable**
- ❑ **Solder and flux sealed, washable**

PT65 [ ] [ ] [ ]

SERIES

Actuators

1	Screwdriver
3	Spindle
5	Segment wheel
7	Accessories

Codes

01	BCD
02	BCD complement
03	Hexadecimal
06	Hexadecimal complement

Terminals

(none)	Straight
L254	Right angle, spacing 2,54 (.100)
L508	Right angle, spacing 5,08 (.200)

ELECTRICAL SPECIFICATIONS

- Operating voltage : 24 VDC max.
- Contact load, static : 400mA max.
- Contact load, dynamic : 150mA max.
- Initial contact resistance : 80 mΩ max.
- Insulation resistance : 100 MΩ min.

MECHANICAL AND THERMAL SPECS

- Torque : 0,7 Ncm min.
- Expected life : 10.000 cycles min.
- Operating temperature : -20°C to +70°C

F

MATERIALS

- Base : UL94-V0, high temperature thermoplastic
- Cover : UL94-V0, high temperature thermoplastic, grey
- Actuator : PA 4.6 nylon
- Contacts : gold over nickel plated phosphor bronze
- Terminals : tin plated

SOLDER RECOMMENDATIONS

(DIN CEI 68-2-20)

- Manual soldering : 340°C max.for 2 seconds max.
- Wave soldering : 260°C max. for 10 seconds max.

PACKAGING

- Switches for screwdriver slot or accessory actuation (PT651 and PT657) : tubes of 50 pieces
- Switches with spindle (PT653) or segment wheel (PT655) : candy trays of 50 pieces
- Accessories : bags of 50 pieces

DIMENSIONS

Screwdriver slot, straight terminals

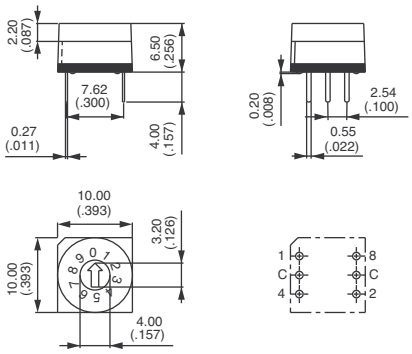

Dimensions : first dimensions are in mm while inches are shown as bracketed numbers.

The company reserves the right to change specifications without notice.

ACTUATORS

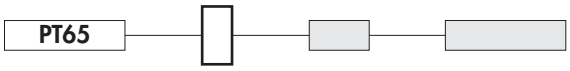

1 Screwdriver

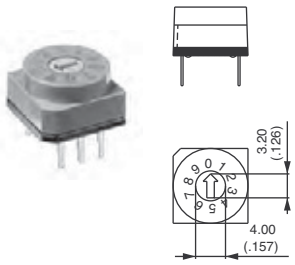

3 Spindle (grey)

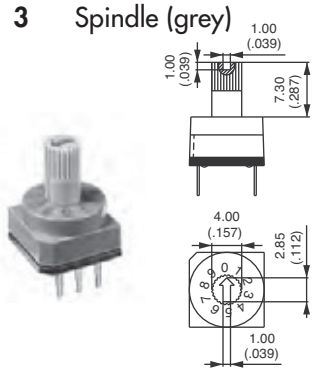

5 Segment wheel (grey)

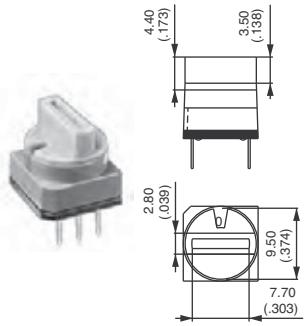

7 Accessories

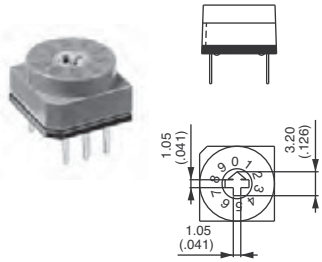

See next page

CODES / TRUTH TABLES

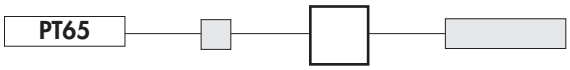

01 BCD

	C	1	2	4	8	
0	●					0
1	●	●				1
2	●		●			2
3	●	●	●			3
4	●			●		4
5	●	●		●		5
6	●		●	●		6
7	●	●	●	●		7
8	●				●	8
9	●	●			●	9

▲ Position ▲ Marking

02 BCD complement

	C	1	2	4	8	
0	●	●	●	●	●	0
1	●		●	●	●	1
2	●	●		●	●	2
3	●			●	●	3
4	●	●	●		●	4
5	●		●		●	5
6	●	●			●	6
7	●				●	7
8	●	●	●	●		8
9	●		●	●		9

03 Hexadecimal

	C	1	2	4	8	
0	●					0
1	●	●				1
2	●		●			2
3	●	●	●			3
4	●			●		4
5	●	●		●		5
6	●		●	●		6
7	●	●	●	●		7
8	●				●	8
9	●	●			●	9
10	●		●		●	A
11	●	●	●		●	B
12	●			●	●	C
13	●	●		●	●	D
14	●		●	●	●	E
15	●	●	●	●	●	F

06 Hexadecimal complement

	C	1	2	4	8	
0	●	●	●	●	●	0
1	●		●	●	●	1
2	●	●		●	●	2
3	●			●	●	3
4	●	●	●		●	4
5	●		●		●	5
6	●	●			●	6
7	●				●	7
8	●	●	●	●		8
9	●		●	●		9
10	●	●		●		A
11	●			●		B
12	●	●	●			C
13	●		●			D
14	●	●				E
15	●					F

TERMINALS

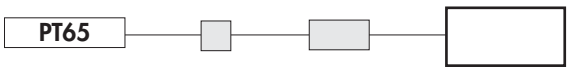

(none) Straight

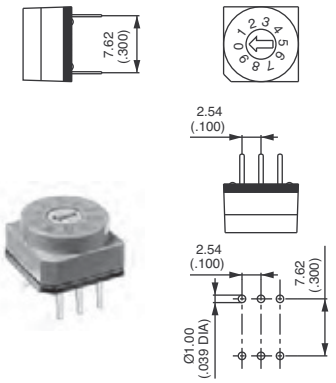

L254 Right angle spacing 2,54 (.100)

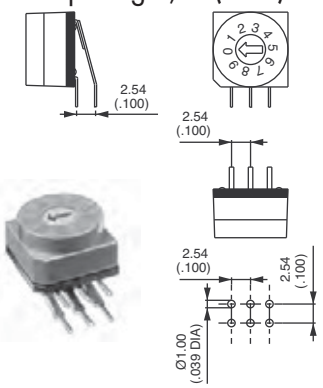

L508 Right angle spacing 5,08 (.200)

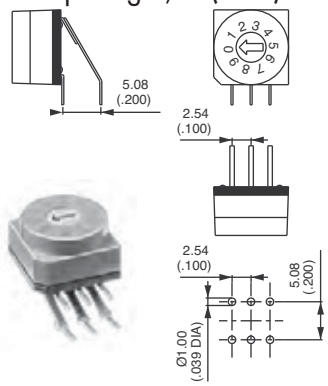

F

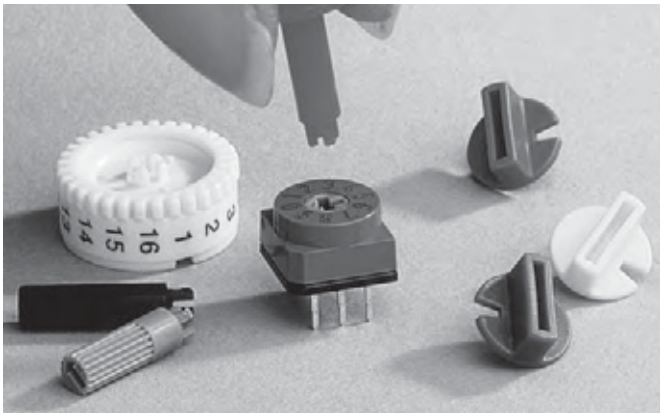

ACCESSORIES ADAPTED TO YOUR APPLICATIONS

Basic model PT65**7** has been designed to accept different actuators with snap-in connection.

According to your application, you can choose between spindles or plastic knobs in two different lengths and a Ø 17 mm (.669) knurled wheel for lateral marking.

Standard colours are shown below. Special colours are also available on request.

SPINDLES	P/N	COLOURS
Length 11,6 mm (standard)	U4822	black
	U4824	grey
Length 13,3 mm	U4832	black

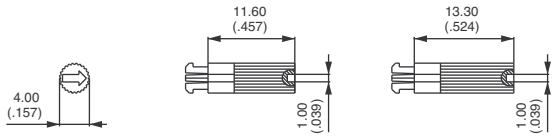

PLASTIC KNOBS	P/N	COLOURS
Length 5,3 mm (standard)	U4906	red
Length 15,7 mm	U4916	red
Length 4,4 mm	U4941	blue
	U4943	green
	U4944	grey
	U4945	yellow
	U4946	red

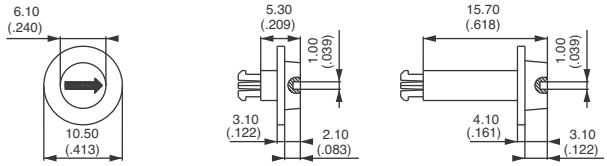

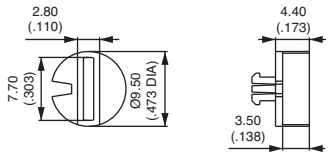

KNURLED WHEEL	P/N	COLOUR
(unmarked - marking on request)	U4847/1	white/black

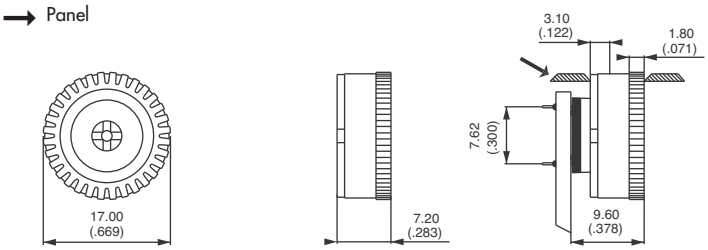

STANDARD PRODUCTS

MODELS / CODES	FOR SCREWDRIVER		WITH SPINDLE	WITH SEGMENT WHEEL		FOR ACCESS.
	Upper actuation	Side actuation	Upper actuation	Upper actuation	Side actuation	Upper actuation
BCD	PT65101	PT65101L254	PT65301	PT65501	-	PT65701
		PT65101L508			-	-
BCD complement	PT65102	-	-	PT65502	-	-
Hexadecimal	PT65103	PT65103L254	PT65303	PT65503	PT65303L254	-
		PT65103L508				
Hexadecimal complem.	PT65106	-	-	-	-	-

NDS-DP-DA series

DIP switches

Distinctive features and specifications

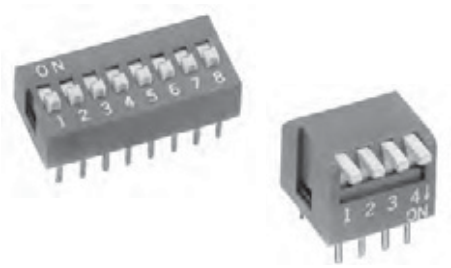

- ❑ **Standard, piano and right angle models**
- ❑ **1 to 12 positions**
- ❑ **Top tape sealing option**

ELECTRICAL SPECIFICATIONS

- Current/voltage rating : 25mA 24VDC
- Initial contact resistance : 50mΩ max.
- Insulation resistance (at 500VDC) :
  100 MΩ min. between adjacent terminals
- Dielectric strength : 500VDC for one minute
- Circuit : single pole, single throw
- Electrical life : 2.000 cycles min. per switch

GENERAL SPECIFICATIONS

- Operating force :
  - NDS/DA models : 10N
  - DP models : 4N
- Travel :
  - NDS/DA : 2 mm (.078)
  - DP models : 30°
- Operating temperature :
  - DP/DA models : -20°C to +70°C
  - NDS models : -40°C to +85°C

MATERIALS

- Case, UL94-V0, glass fiber filled PBT, black
- Cover : UL94-V0,glass fiber filled PBT, red
- Actuator : UL94-V0, glass fiber filled PBT, white
- Terminals/contacts : gold over nickel plated phosphor bronze
- Terminal seal : epoxy
- Tape seal : polyester film

RECOMMENDED SOLDERING AND CLEANING PROCESSES

- Hand soldering : 320°C max. for 2 seconds max. (30 watt iron max.)
- Wave soldering : 260°C max. for 5 seconds max.
- Force rinse, high agitation or triple bath cleaning method (**with tape seal, option T**) : freon TF or TE. When vapor methods are used, do not subject switch to solvents above 51°C.

Note : keep switches in "OFF" position during soldering and cleaning for best results.

Dimensions : first dimensions are in mm while inches are shown as bracketed numbers.

Packaging unit : standard IC tubes - Quantities depending on model. See table below.

NDS(R)	Quantity
NDS(R)-01	120
NDS(R)-02	72
NDS(R)-03	51
NDS(R)-04	40
NDS(R)-05	32
NDS(R)-06	27
NDS(R)-07	24
NDS(R)-08	21
NDS(R)-09	19
NDS(R)-10	17
NDS(R)-12	14

NDS(R)-T	Quantity
NDS(R)-01T	113
NDS(R)-02T	70
NDS(R)-03T	50
NDS(R)-04T	39
NDS(R)-05T	32
NDS(R)-06T	27
NDS(R)-07T	24
NDS(R)-08T	21
NDS(R)-09T	19
NDS(R)-10T	17
NDS(R)-12T	14

DA	Quantity
DA-02	73
DA-03	52
DA-04	40
DA-05	33
DA-06	28
DA-07	24
DA-08	21
DA-09	19
DA-10	17
DA-12	14

DA-T	Quantity
DA-02T	70
DA-03T	50
DA-04T	39
DA-05T	32
DA-06T	28
DA-07T	24
DA-08T	21
DA-09T	19
DA-10T	17
DA-12T	14

DP/DPL	Quantity
DP(L)-02	70
DP(L)-03	50
DP(L)-04	39
DP(L)-05	32
DP(L)-06	27
DP(L)-08	21
DP(L)-10	17
DP(L)-12	14

DP-T/DPL-T	Quantity
DP(L)-02T	65
DP(L)-03T	49
DP(L)-04T	39
DP(L)-05T	32
DP(L)-06T	27
DP(L)-08T	21
DP(L)-10T	17
DP(L)-12T	14

The company reserves the right to change specifications without notice.

NDS/NDSR series

Standard DIP switches

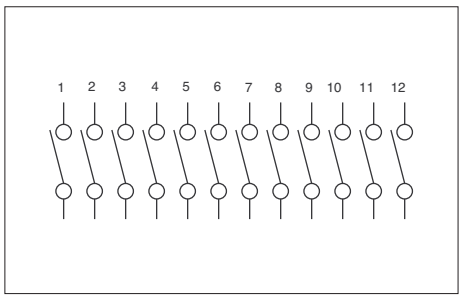

- Raised or recessed actuator
- 1 to 12 positions

MODEL STRUCTURE

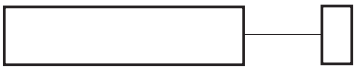

Raised actuator : NDS

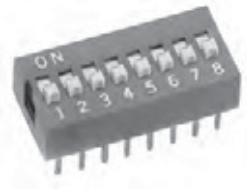

Model No	No. pos.	Dim. "A"	Dim. "B"
NDS-01	1	4,22 (.166)	-
NDS-02	2	6,44 (.253)	2,54 (.100)
NDS-03	3	8,98 (.353)	5,08 (.200)
NDS-04	4	11,52 (.453)	7,62 (.300)
NDS-05	5	14,06 (.553)	10,16 (.400)
NDS-06	6	16,60 (.653)	12,70 (.500)
NDS-07	7	19,14 (.753)	15,24 (.600)
NDS-08	8	21,68 (.853)	17,78 (.700)
NDS-09	9	24,22 (.953)	20,32 (.800)
NDS-10	10	26,76 (1.053)	22,86 (.900)
NDS-12	12	31,84 (1.253)	27,94 (1.100)

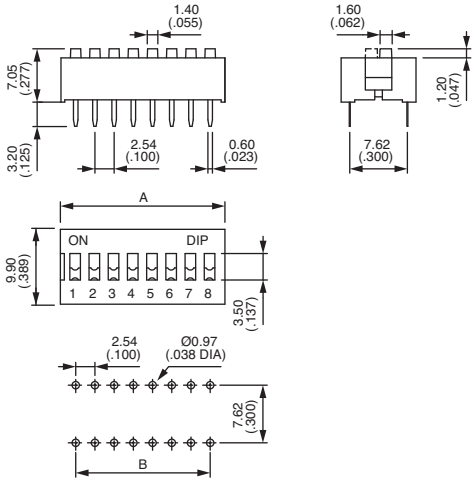

Top tape sealed : add "T" after model number.

Recessed actuator : NDSR

Model No	No pos.	Dim. "A"	Dim. "B"
NDSR-01	1	4,22 (.166)	-
NDSR-02	2	6,44 (.253)	2,54 (.100)
NDSR-03	3	8,98 (.353)	5,08 (.200)
NDSR-04	4	11,52 (.453)	7,62 (.300)
NDSR-05	5	14,06 (.553)	10,16 (.400)
NDSR-06	6	16,60 (.653)	12,70 (.500)
NDSR-07	7	19,14 (.753)	15,24 (.600)
NDSR-08	8	21,68 (.853)	17,78 (.700)
NDSR-09	9	24,22 (.953)	20,32 (.800)
NDSR-10	10	26,76 (1.053)	22,86 (.900)
NDSR-12	12	31,84 (1.253)	27,94 (1.100)

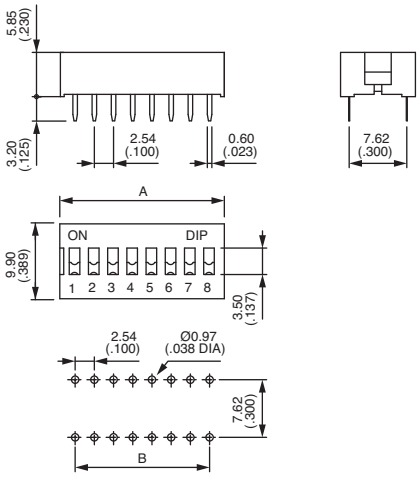

Top tape sealed : add "T" after model number.

F

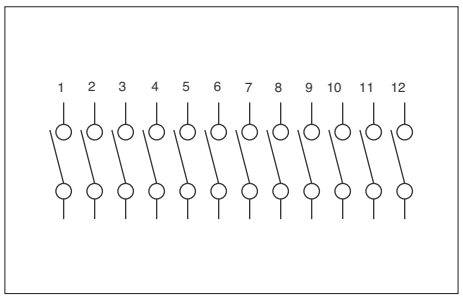

- Short or long actuator
- 2 to 12 positions

Note : Push down for "ON" is our standard type.
Push down for "OFF" is also available on special order, consult factory.

MODEL STRUCTURE

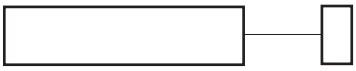

Short actuator : DP

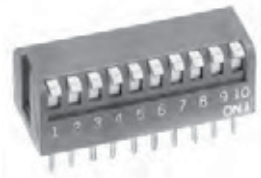

Model No	No. pos.	Dim "A"	Dim. "B"
DP-02	2	6,44 (.253)	2,54 (.100)
DP-03	3	9,18 (.361)	5,08 (.200)
DP-04	4	11,72 (.461)	7,62 (.300)
DP-05	5	14,26 (.561)	10,16 (.400)
DP-06	6	16,80 (.661)	12,70 (.500)
DP-08	8	21,88 (.861)	17,78 (.700)
DP-10	10	26,96 (1.061)	22,86 (.900)
DP-12	12	32,04 (1.261)	27,94 (1.100)

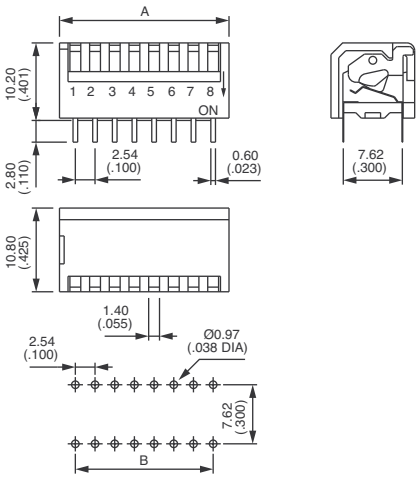

Top tape sealed : add "T" after model number.

Long actuator : DPL

Model No	No. pos.	Dim "A"	Dim. "B"
DPL-02	2	6,44 (.253)	2,54 (.100)
DPL-03	3	9,18 (.361)	5,08 (.200)
DPL-04	4	11,72 (.461)	7,62 (.300)
DPL-05	5	14,26 (.561)	10,16 (.400)
DPL-06	6	16,80 (.661)	12,70 (.500)
DPL-08	8	21,88 (.861)	17,78 (.700)
DPL-10	10	26,96 (1.061)	22,86 (.900)
DPL-12	12	32,04 (1.261)	27,94 (1.100)

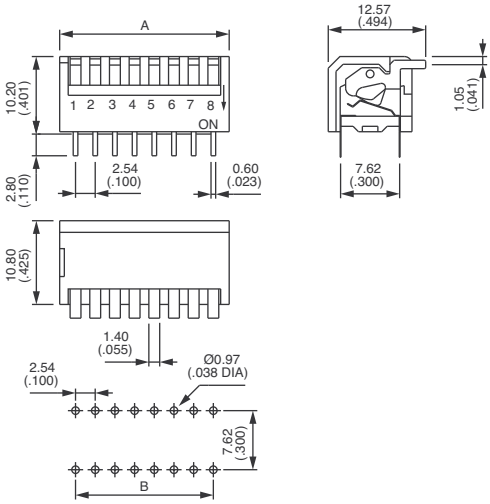

Top tape sealed : add "T" after model number.

F

DA series

Right angle DIP switches

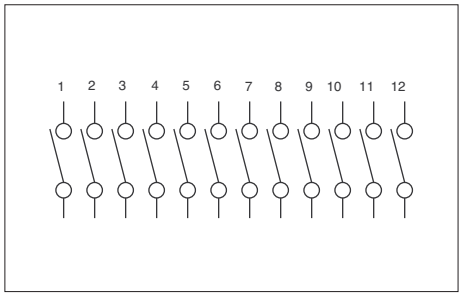

- 2 to 12 positions

MODEL STRUCTURE

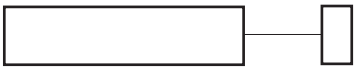

Raised actuator : DA

Model No	No. pos.	Dim "A"	Dim. "B"
DA-02	2	6,44 (.253)	2,54 (.100)
DA-03	3	8,89 (.350)	5,08 (.200)
DA-04	4	11,52 (.453)	7,62 (.300)
DA-05	5	14,06 (.553)	10,16 (.400)
DA-06	6	16,60 (.653)	12,70 (.500)
DA-07	7	19,14 (.753)	15,24 (.600)
DA-08	8	21,68 (.853)	17,78 (.700)
DA-09	9	24,22 (.953)	20,32 (.800)
DA-10	10	26,76 (1.053)	22,86 (.900)
DA-12	12	31,84 (1.253)	27,94 (1.100)

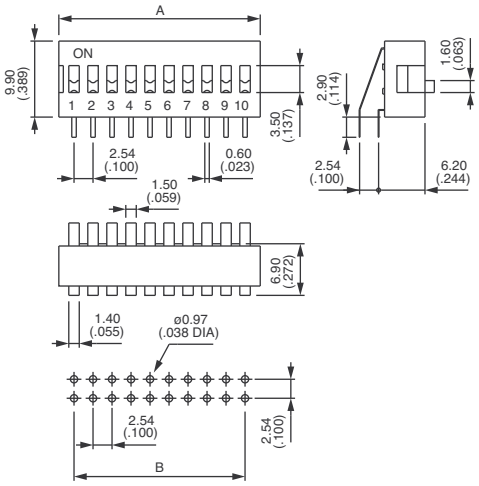

Top tape sealed : add "T" after model number.

F

Distinctive features

Low profile

- The lowest case available in 2, 4, 6 and 8 pole versions
- Reduction of the shadow effect in IR soldering
- 30 % reduction of component volume

Two versions

Surface mount models

- Designed for reflow soldering
- UL 94-V0 high temperature materials
- Tin plated terminals

Through-hole models

- Same thermal specifications as SMT models, allowing mixed soldering process

Washable by construction

- Moulded-in terminals
- Ultrasonic-welded case
- Two slots on case corners allowing removal of protection tape

Reliable contacts

- Anti-crush system on moving contact
- Bifurcated self-cleaning sliding contacts
- Positive detent actuation
- Recessed slide actuators preventing accidental actuation
- Good visibility of actuators : black slide on clear background

Two types of packaging

Surface mount models

- Tape and reel (1.000 pieces per reel) - IC tubes

Through-hole models

- IC tubes

Dimensions : first dimensions are in mm while inches are shown as bracketed numbers.

The company reserves the right to change specifications without notice.

IKN series

Surface mount DIP switches

Low profile

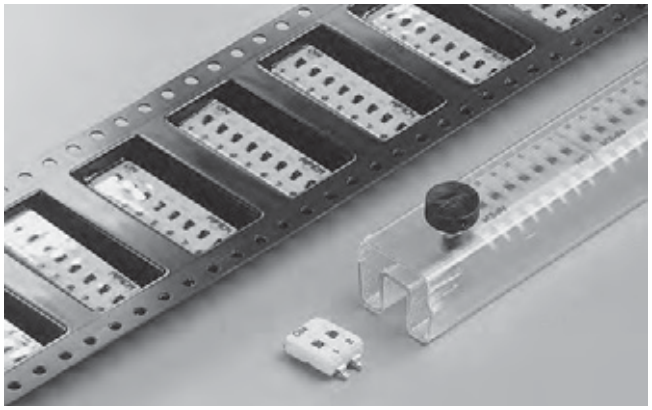

- **Overall height from PCB : 2,85 mm (.112)**
- **Self-cleaning wiping contacts**
- **Recessed actuator with positive detent**
- **Tin plated terminals**
- **Process compatible - withstand IR reflow soldering**
  (see Technical Information, Surface Mount, end of catalogue)
- **Washable**

Tape & reel	IC tubes	No pos.	Dimension "A"
IKN0204000	**IKN0203000**	2	6 (.236)
IKN0404000	**IKN0403000**	4	11,10 (.437)
IKN0604000	**IKN0603000**	6	16,20 (.637)
IKN0804000	**IKN0803000**	8	21,30 (.838)

Supplied with all poles in "ON" position.
Other models (3, 5 and 7 positions) : on request

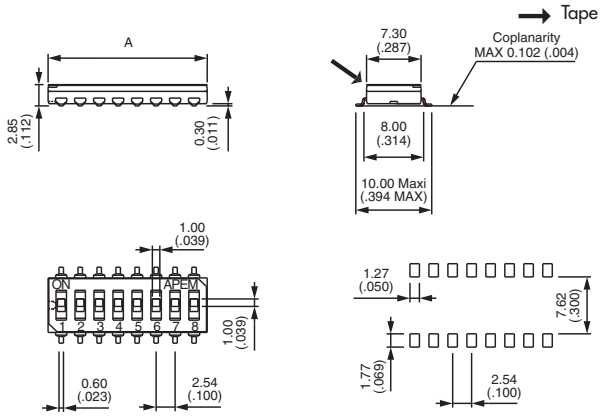

PACKAGING

Unrolling direction →

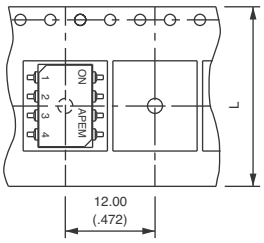

Pos.	Tape dim. "L"	Reel dim. "A"
2	16 (.629)	16,40 (.646)
4	24 (.944)	24,40 (.960)
6	24 (.944)	24,40 (.960)
8	32 (1.259)	32,40 (1.275)

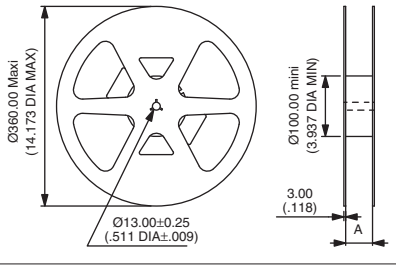

SPECIFICATIONS

- Max. current/voltage rating :
  - switching : 100mA 24VDC
  - non-switching : 100mA 48VDC
- Contact resistance :
  - initial : 30 mΩ max.
  - after 2.000 cycles : 100 mΩ max.
- Insulation resistance : 1.000 MΩ min. at 500VDC
- Dielectric strength : 500 VAC min.
- Electrical life : 2.000 cycles
- Travel : 0,67 mm (.026)
- Operating temperature : -40°C to +100°C
- Storage temperature : -40°C to +125°C

MATERIALS

- Case and actuator : UL 94-V0 thermoplastic
- Stationary contact : bronze, gold plated over nickel barrier
- Moving contact : beryllium copper, gold plated
- Terminals : tin plated over nickel barrier
- Protection tape : polyimide

Antistatic packaging - Standard packaging units :
- Reels of 1.000 pieces

Tape meeting international standard IEC - Publication 286-3 (EIA481A)
Start leader : 400 mm min. - End leader : 160 mm
- IC tubes : see next page.

IKN series

Through-hole DIP switches

Low profile

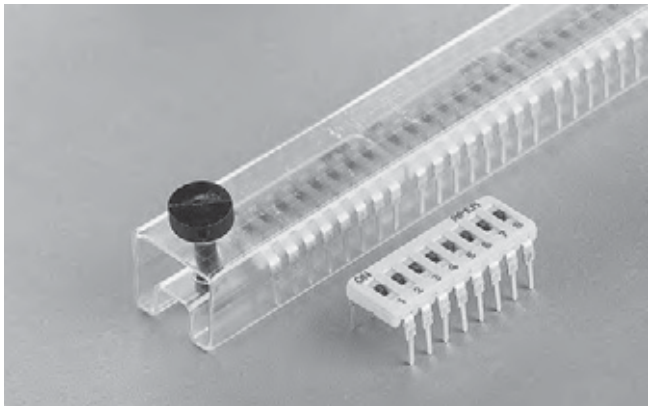

- **Overall height from PCB : 4 mm (.156)**
- **Self-cleaning wiping contacts**
- **Recessed actuator with positive detent**
- **Tin plated terminals**
- **Wave solderable**
- **Washable**

Model No	No pos.	Dimension "A"
IKN0200000	2	6 (.236)
IKN0400000	4	11,10 (.437)
IKN0600000	6	16,20 (.637)
IKN0800000	8	21,30 (.838)

Supplied with all poles in "ON" position.
Other models (3, 5 and 7 positions) : on request

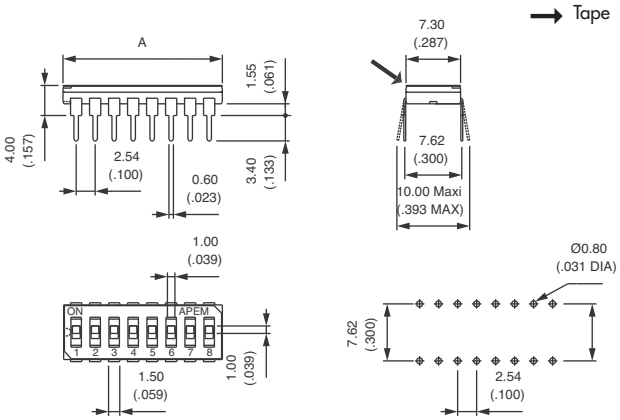

PACKAGING

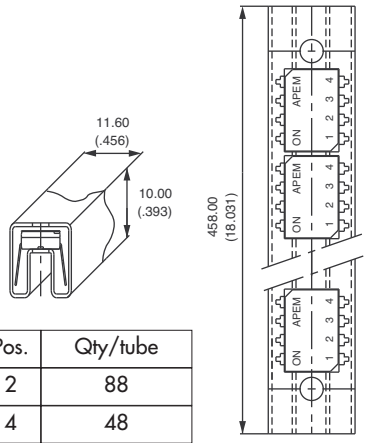

Pos.	Qty/tube
2	88
4	48
6	33
8	25

IC TUBES

SPECIFICATIONS

- Max. current/voltage rating :
  - switching : 100mA 24VDC
  - non-switching : 100mA 48VDC
- Contact resistance :
  - initial: 30 mΩ max.
  - after 2.000 cycles : 100 mΩ max.
- Insulation resistance : 1.000 MΩ min. at 500VDC
- Dielectric strength : 500 VAC min.
- Electrical life : 2.000 cycles
- Travel : 0,67 mm (.026)
- Operating temperature : -40°C to +100°C
- Storage temperature : -55°C to +125°C

MATERIALS

- Case and actuator : UL 94-V0 thermoplastic
- Stationary contact : bronze, gold plated over nickel barrier
- Moving contact : beryllium copper, gold plated
- Terminals : tin plated over nickel barrier
- Protection tape : polyimide

F

IKD series

Surface mount DIP switches

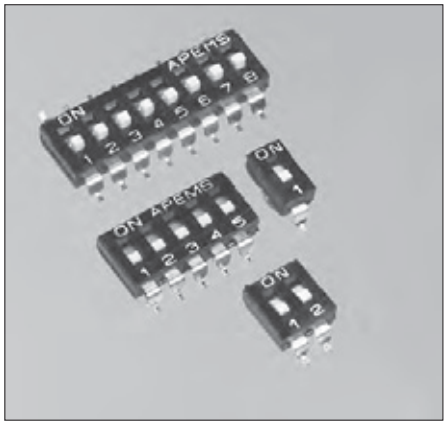

- Raised actuator - no tape seal
- Even and odd pole numbers
- Self-cleaning wiping contacts
- Gold plated terminals
- Process compatible - withstand IR reflow soldering
- Recessed actuator on request - top tape seal sandard
- J bend terminal available on request

Tape & reel	IC tubes	No pos.	Dimension "A"	Qty/tube
IKD0104101	**IKD0103101**	1	3,48 (.137)	130
IKD0204101	**IKD0203101**	2	6,02 (.237)	76
IKD0304101	**IKD0303101**	3	8,56 (.337)	55
IKD0404101	**IKD0403101**	4	11,10 (.437)	42
IKD0504101	**IKD0503101**	5	13,64 (.537)	35
IKD0604101	**IKD0603101**	6	16,18 (.637)	28
IKD0704101	**IKD0703101**	7	18,72 (.737)	25
IKD0804101	**IKD0803101**	8	21,26 (.837)	22
IKD0904101	**IKD0903101**	9	23,80 (.937)	20
IKD1004101	**IKD1003101**	10	26,34 (1.037)	18
IKD1204101	**IKD1203101**	12	31,42 (1.237)	15

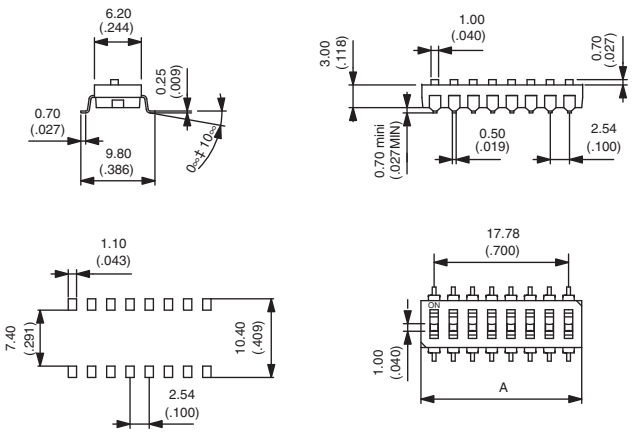

Supplied with all poles in "OFF" position.

F

SPECIFICATIONS

- Max. current/voltage rating :
  - switching : 25mA 24VDC
  - non-switching : 100mA 50VDC
- Initial contact resistance : 50 mΩ max.
- Insulation resistance : 100 MΩ min. at 500VDC
- Dielectric strength : 500 VAC min.
- Electrical life : 2.000 cycles
- Travel : 1 mm (.039)
- Operating temperature : -20°C to +85°C
- Storage temperature : -40°C to +85°C

MATERIALS

- Case and actuator : UL94-V0 thermoplastic
- Moving contact : phosphor bronze, gold plated, over nickel barrier
- Terminals : gold plated
- Protection tape : polyimide

Antistatic packaging - standard packaging units

- Reels of 900 pieces
  Tape meeting international standard IEC, publication 286-3 (EIA481A).
- IC tubes : see above chart for quantities.

Dimensions : first dimensions are in mm while inches are shown as bracketed numbers.

The company reserves the right to change specifications without notice.

IKD series

Through-hole DIP switches

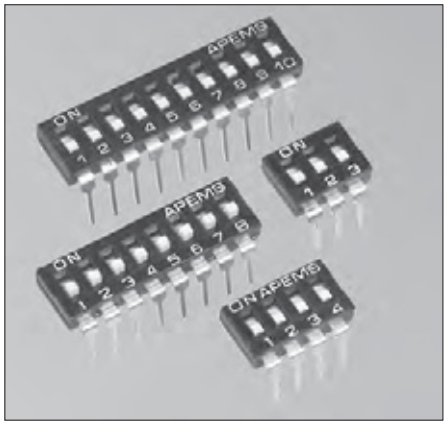

- **Raised actuator - no tape seal**
- **Even and odd pole numbers**
- **Self-cleaning wiping contacts**
- **Gold plated terminals**
- **Wave solderable**
- **Recessed actuator on request - top tape seal sandard**

Model No	No pos.	Dimension "A"	Qty/tube
IKD0100101	1	3,48 (.137)	130
IKD0200101	2	6,02 (.237)	76
IKD0300101	3	8,56 (.337)	55
IKD0400101	4	11,10 (.437)	42
IKD0500101	5	13,64 (.537)	34
IKD0600101	6	16,18 (.637)	29
IKD0700101	7	18,72 (.737)	25
IKD0800101	8	21,26 (.837)	22
IKD0900101	9	23,80 (.937)	20
IKD1000101	10	26,34 (1.037)	18
IKD1200101	12	31,42 (1.237)	15

Supplied with all poles in "OFF" position.

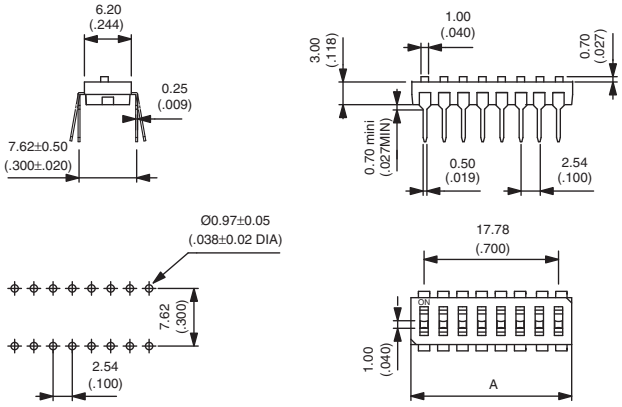

SPECIFICATIONS

- Max. current/voltage rating :
  - switching : 25mA 24VDC
  - non-switching : 100mA 50VDC
- Initial contact resistance : 50 mΩ max.
- Insulation resistance : 100 MΩ min. at 500VDC
- Dielectric strength : 500 VAC min.
- Electrical life : 2.000 cycles
- Travel : 1 mm (.039)
- Operating temperature : -20°C to +85°C
- Storage temperature : -40°C to +85°C

MATERIALS

- Case and actuator : UL94-V0 thermoplastic
- Moving contact : phosphor bronze, gold plated, over nickel barrier
- Terminals : gold plated
- Protection tape : polyimide

Antistatic packaging - standard packaging units

- IC tubes : see above chart for quantities.

Dimensions : first dimensions are in mm while inches are shown as bracketed numbers.

IKH series

Surface mount half pitch DIP switches

Very low profile

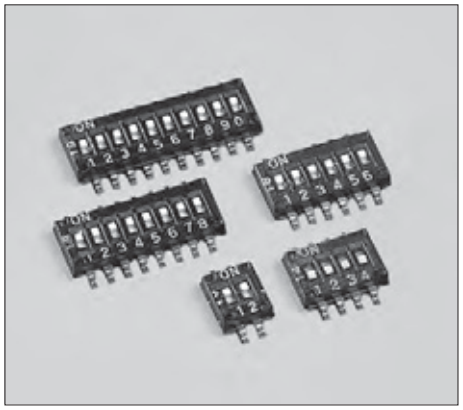

- **1,27 mm (.050) terminal to terminal pitch**
- **Overall height from PCB : 1,6 mm (.063) only**
- **Very small PCB space requirement**
- **Process compatible - withstand IR reflow soldering**
  (see Technical Information, Surface Mount, end of catalogue)
- **Washable (tape seal standard)**
- **Actuator set in OFF position available on request**

Tape & reel	IC tubes (Qty)	No pos.	Dimension "A"
IKH0204000	**IKH0203000** (125)	2	3,77 (.148)
IKH0404000	**IKH0403000** (75)	4	6,31 (.248)
IKH0604000	**IKH0603000** (54)	6	8,85 (.348)
IKH0804000	**IKH0803000** (40)	8	11,39 (.448)
IKH1004000	**IKH1003000** (33)	10	13,93 (.548)

Supplied with all poles in "ON" position.
Switches without tape seal : on request - Long terminal : on request.

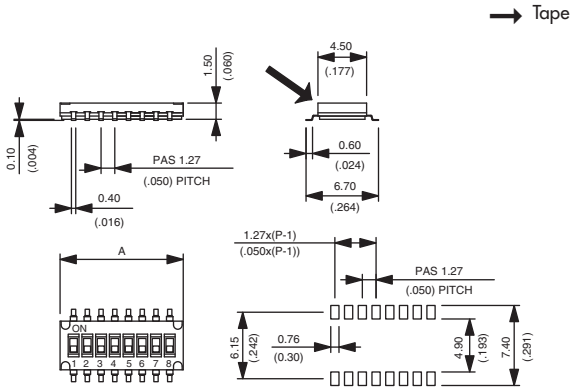

TAPE AND REEL PACKAGING

Unrolling direction →

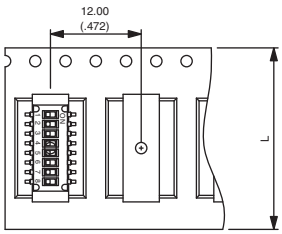

Pos.	Tape dim. "L"	Reel dim. "A"
2	12,00 (.472)	12,40 (.488)
4	16,00 (.629)	16,40 (.646)
6	16,00 (.629)	16,40 (.646)
8	24,00 (.944)	24,40 (.960)
10	24,00 (.944)	24,40 (.960)

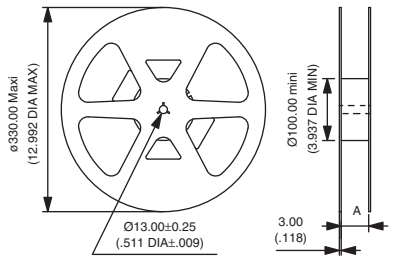

SPECIFICATIONS

- Max. current/voltage rating :
  - switching : 25mA 24VDC
  - non switching : 100mA 50VDC
- Initial contact resistance : 100 mΩ max.
- Insulation resistance : 100 MΩ min. at 500VDC
- Dielectric strength : 300 Vca min.
- Electrical life : 1.000 cycles
- Travel : 0,60 mm (.024)
- Operating temperature : -20°C to +70°C
- Storage temperature : -40°C to +85°C

MATERIALS

- Case and cover : high temperature thermoplastic UL 94-V0, black
- Actuator : high temperature thermoplastic UL 94-V0, white
- Contacts : phosphor bronze, gold plated, over nickel barrier
- Terminals : tin plated
- Tape seal : polyimide

Antistatic packaging - standard packaging units

- Reels of 4.000 pieces
  Tape meeting international standard IEC - Publication 286-3 (EIA481A)
- IC tubes : see above.

Dimensions in mm and inches.

The company reserves the right to change specifications without notice.

Industrial controls

Section G

G

A1-A01-A02-A03 series

Industrial controls

Distinctive features

The A01 and A02 series offer ranges of :
- pushbutton switches, illuminated or not
- indicators
- 2 or 3 position keylock switches
- 2 or 3 position rotary lever switches
- emergency stop switches
with rectangular, square or round operators.

- ❑ **Environmental protection : IP65**
- ❑ **Modular construction**
- ❑ **Electrical life : 50.000 cycles min.**
- ❑ **Screen engraving or insertable legends on request**
- ❑ **Approvals (for switch blocks only)**

UL 1054 BS RIA 20 Shock & Vibration

EN 61058-1

Each sub-assembly has to be ordered separately.

A01 - A1 - A03 series

- Panel cut-out :
  Ø 16 mm (.630), except :
  - flush mount round : Ø 22 mm (.866)
  - flush mount rectangular : 20.60 x 26.70 mm
  - flush mount square : 20.60 x 20.60 mm
  - A1 series : Ø 22 mm (.866)
  - A03 series : round or square Ø 22 (.866)
    flush mount : Ø 30 mm (1.378)
- 1, 2, 3 and 4 poles
- Solder lug/quick-connect terminals
- Contacts : silver, gold plated
- Current/voltage rating :
  6A 250VAC max. - 10mA 5VAC min.
  These values are applicable for all components, accessories and lamps, unless otherwise specified in the following pages.
- Lamp : filament, neon or LED

A02 series

- Panel cut-out :
  - round or square : Ø 22 mm (.866)
  - rectangular : 29,5 x 21,5 mm (1.160x.846)
  - flush mount : Ø 30 mm (1.378)
- 1 and 2 poles
- Screw terminals (optional : quick-connect term.)
- Contacts : silver
- Current/voltage rating : 12A 380VAC
  16A 250VAC max. - 25mA 5VAC min.
  These values are applicable for all components, accessories and lamps, unless otherwise specified in the following pages.
- Lamp : filament, neon, LED
  or special multi-LED array

Option : end cap terminal guard. Order separately (see end of A02 series).

Packaging unit :
A1 : 25 pieces - A01 : 20 pieces (except pushbuttons: 25 pieces) - A02 : 25 pieces - A03 : 10 pieces.
Dimensions : first dimensions are in mm while inches are shown as bracketed numbers.

The company reserves the right to change specifications without notice.

A1-A01-A02-A03 series

Industrial controls

Specifications for pushbutton, keylock and rotary switches

ELECTRICAL SPECIFICATIONS		
	A01 - A1 - A03	**A02**
• **Function** :	Momentary or maintained action	Momentary or maintained action
• **Current/voltage rating** :	10mA 5VAC min. 6A 250VAC max. - 6A 12VDC max.	25mA 5VAC min. 12A 380VAC - 16A 250VAC max. 12A 12VDC max.
• **Contact gap**	> 1 mm (.039)	Double break 2 x 1,5 mm (.059)
• **Initial contact resistance** :	10mΩ max. at 1A 4VDC	10mΩ max. at 1A 4VDC
• **Insulation resistance** :	50 MΩ min.	50 MΩ min.
• **Dielectric strength** :	750V between open contacts 5KV live to accessible	2KV between open contacts 4KV live to accessible
• **Electrical life (resistive load)** :	50.000 cycles	50.000 cycles
• **Insulation** :	Class 2	Class 2
• **Lamp life** :	LED : 60.000 h min. to 75% relative luminosity - Filament : approx. 5.000 h Neon : approx. 10.000 h	LED : 60.000 h min. to 75 % relative luminosity - Filament : approx. 5.000 h Neon : approx. 10.000 h
• **Lamp circuit diagrams**	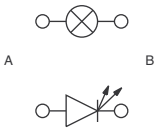	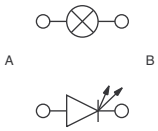

GENERAL SPECIFICATIONS		
	A01 - A1 - A03	**A02**
• **Min. mechanical life** :	Pushb. momentary : 1 million cycles Pushb. maintained : 100.000 cycles Keylock and rotary : 100.000 cycles	Pushb. momentary: 1 million cycles Pushb. maintained : 100.000 cycles Keylock and rotary : 100.000 cycles
• **Panel thickness**	8 mm (.315) max.	8 mm (.315) max.
• **Operating temperature** :	-20°C to +55°C	-20°C to +85°C
• **Solder heat resistance** : (IEC 68-2-20Tb, method 2)	350°C, 5 sec.	350°C, 5 sec.
• **Degree of environmental protection** (IEC 529)	IP 65 front of panel IP 40 back of panel	IP 65 front of panel IP 40 back of panel
• **Lamps** :	Midget Grooved T1 3/4, filament, LED or neon	Midget Grooved T1 3/4, filament, LED or neon Special multi-LED array
• **Switch terminals** :	Solder/quick-connect 2,8 mm (.110)	M3 screws - wire 2 x 0,75 mm² max.
• **Lamp terminals** :	Solder/quick-connect 2,8 mm (.110)	M3 screws Flexible wire 2 x 2,5 mm² max. Rigid wire 4 mm² max.

Specifications for emergency stop switches : see pages 10 and 22.
For screen engraving or film legends, contact APEM.

G

A1 series

Engraved aluminium flush mounting pushbuttons and indicators

Panel cut-out Ø 22 (.866)

A pushbutton assembly requires :
engraved screen + lamp (if illuminated) + operator + switch block + flush mount bezel.
To order these elements, select desired model numbers from the table below.
Example : pushbutton, round, illuminated, sealed to IP65, latching, single pole with "start" engraving, 24V blue LED and flush mounting bezel = A1PCA1X103K403.

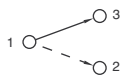

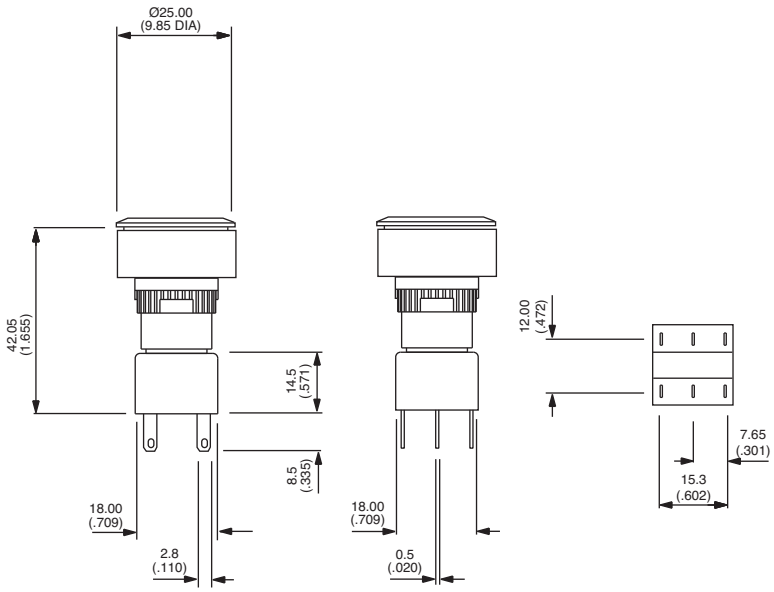

A1 [ ] [ ] [ ] [ ] [ ] [ ] [ ] [ ] [ ]

Switch Type
- P - pushbutton
- I - indicator

Bezel
- C - round

Illumination
- A - illuminated
- B - non-illum.

Sealing
- 0 - unsealed
- 1 - sealed IP65

Function
- 0 - indicator
- X - latching
- Y - momentary

Switch block
- 0 - indicator
- 1 - single pole
- 2 - double pole
- 5 - three pole
- 3 - four pole

Accessories
- 03 - flushmount

Bulb
- A1 - filament 6.3V
- B1 - filament 14V
- C1 - filament 28V
- D1 - filament 36V
- E1 - filament 48V
- F1 - filament 60V
- G1 - Neon 110V
- H1 - Neon 220V
- I1 - Led 6V red
- I2 - Led 6V green
- I3 - Led 6V amber
- J1 - Led 12V red
- J2 - Led 12V green
- J3 - Led 12V amber
- J4 - Led 12V blue
- J5 - Led 12V white
- K1 - Led 24V red
- K2 - Led 24V green
- K3 - Led 24V amber
- K4 - Led 24V blue
- K5 - Led 24V white
- L1 - Led 48V red
- L2 - Led 48V green
- L3 - Led 48V amber

Engraved Screen Options

01 - Front Fog Lights	11 - 'Lock'
02 - Rear Fog Lights	12 - 'Unlock'
03 - 'Start'	13 - Rear Window Heating
04 - Interior Light	14 - Cooling
05 - Boot Release	15 - Wipers
06 - Hazard Warning	16 - Washers
07 - Lights	17 - Fan
08 - Heating & Ventilation	18 - Horn
09 - Map Lights	19 - Air recirculation
10 - Side Lights	20 - Blank

OTHER SCREEN ENGRAVING OPTIONS : contact APEM.

G

A01 series

Illuminated or non-illuminated pushbutton switches

Panel cut-out Ø 16 (.630)

A pushbutton assembly requires :
screen + lamp (if illuminated) + operator + switch block.
To order these elements, select desired model numbers from tables below.
Example : IP65 rectangular pushbutton, single pole, maintained, red screen and 12V red LED = A0161B, A0142M1, A0101X and A0151BUL.

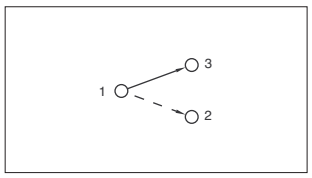

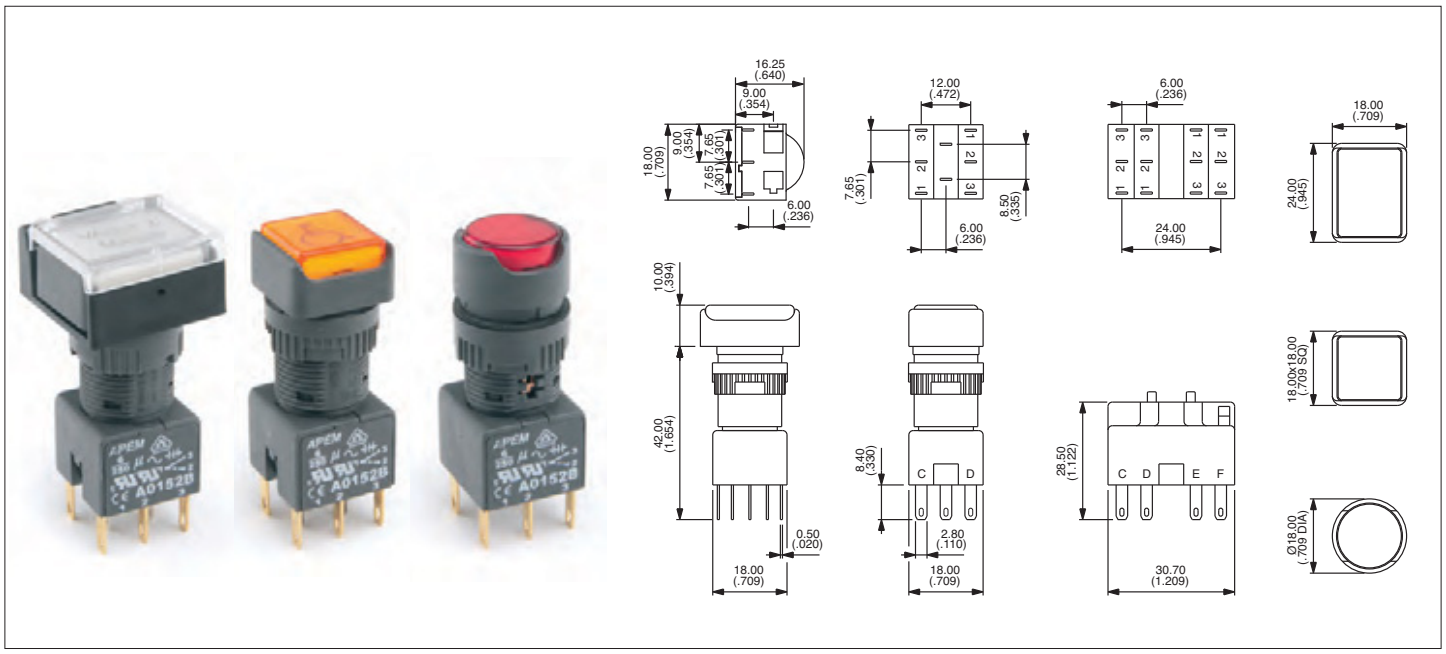

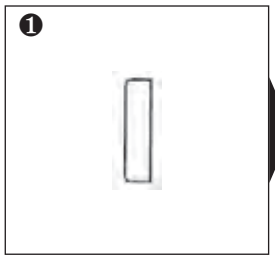

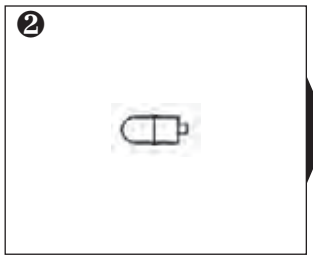

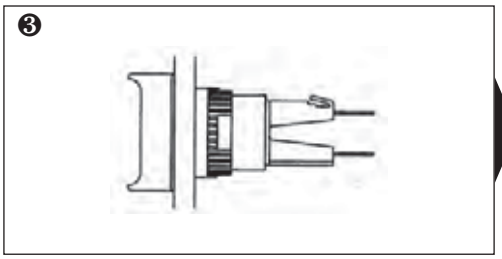

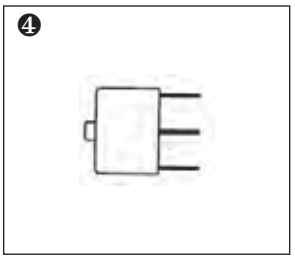

Screen

Bezel	Colour	Part No
▭	black	**A0161A**
▭	red	**A0161B**
▭	amber	**A0161C**
▭	yellow	**A0161D**
▭	green	**A0161E**
▭	blue	**A0161F**
▭	clear	**A0161G**
▭	white	**A0161J**
▭	black	**A0162A**
▭	red	**A0162B**
▭	amber	**A0162C**
▭	yellow	**A0162D**
▭	green	**A0162E**
▭	blue	**A0162F**
▭	clear	**A0162G**
▭	white	**A0162J**
○	black	**A0163A**
○	red	**A0163B**
○	amber	**A0163C**
○	yellow	**A0163D**
○	green	**A0163E**
○	blue	**A0163F**
○	clear	**A0163G**
○	white	**A0163J**

Lamp

Lamp	Voltage	Part No
Filament	6.3V	**A0141A**
Filament	14V	**A0141B**
Filament	28V	**A0141C**
Filament	36V	**A0141D**
Filament	48V	**A0141E**
Filament	60V	**A0141F**
Neon	110V	**A0143G**
Neon	220V	**A0143H**
LED	6V red	**A0142L1**
LED	6V green	**A0142L2**
LED	6V amber	**A0142L3**
LED	12V red	**A0142M1**
LED	12V green	**A0142M2**
LED	12V amber	**A0142M3**
LED	12V blue	**A0142M4**
LED	12V white	**A0142M5**
LED	24V red	**A0142N1**
LED	24V green	**A0142N2**
LED	24V amber	**A0142N3**
LED	24V blue	**A0142N4**
LED	24V white	**A0142N5**
LED	48V red	**A0142P1**
LED	48V green	**A0142P2**
LED	48V amber	**A0142P3**

Operator

Pole	Bezel	Description	Part No
1 or 2	▭	Illum, momentary	**A0101Y**
1 or 2	▭	Illum, maintained	**A0101X**
1 or 2	▭	Non-illum, momentary	**A0102Y**
1 or 2	▭	Non-illum, maintained	**A0102X**
3 or 4	▭	Illum, momentary	**A0103Y**
3 or 4	▭	Illum, maintained	**A0103X**
3 or 4	▭	Non-illum, momentary	**A0104Y**
3 or 4	▭	Non-illum, maintained	**A0104X**
1 or 2	▭	Illum, momentary	**A0105Y**
1 or 2	▭	Illum, maintained	**A0105X**
1 or 2	▭	Non-illum, momentary	**A0106Y**
1 or 2	▭	Non-illum, maintained	**A0106X**
3 or 4	▭	Illum, momentary	**A0107Y**
3 or 4	▭	Illum, maintained	**A0107X**
3 or 4	▭	Non-illum, momentary	**A0108Y**
3 or 4	▭	Non-illum, maintained	**A0108X**
1 or 2	○	Illum, momentary	**A0109Y**
1 or 2	○	Illum, maintained	**A0109X**
1 or 2	○	Non-illum, momentary	**A0110Y**
1 or 2	○	Non-illum, maintained	**A0110X**
3 or 4	○	Illum, momentary	**A0111Y**
3 or 4	○	Illum, maintained	**A0111X**
3 or 4	○	Non-illum, momentary	**A0112Y**
3 or 4	○	Non-illum, maintained	**A0112X**

Switch block

No of poles	Part No
Single pole	**A0151B**
Double pole	**A0152B**
Three pole	**A0155B**
Four pole	**A0153B**

UNSEALED SWITCHES (IP40) : add "01" to end of **operator** model number.

BI-COLOUR LED's optional.

SCREEN ENGRAVING/INSERTABLE LEGENDS : contact APEM

Bezel: ▭ rectangular, ▭ square, ○ round, 'Illum' - illuminated, 'Non-illum' - non illuminated

A01 series

Indicators

Panel cut-out Ø 16 (.630)

An indicator assembly requires :
screen + lamp + operator.
To order these elements, select desired model numbers from tables below.
Example : IP65 rectangular indicator with red screen and 12V red LED = A0161B, A0142M1 and A0171.

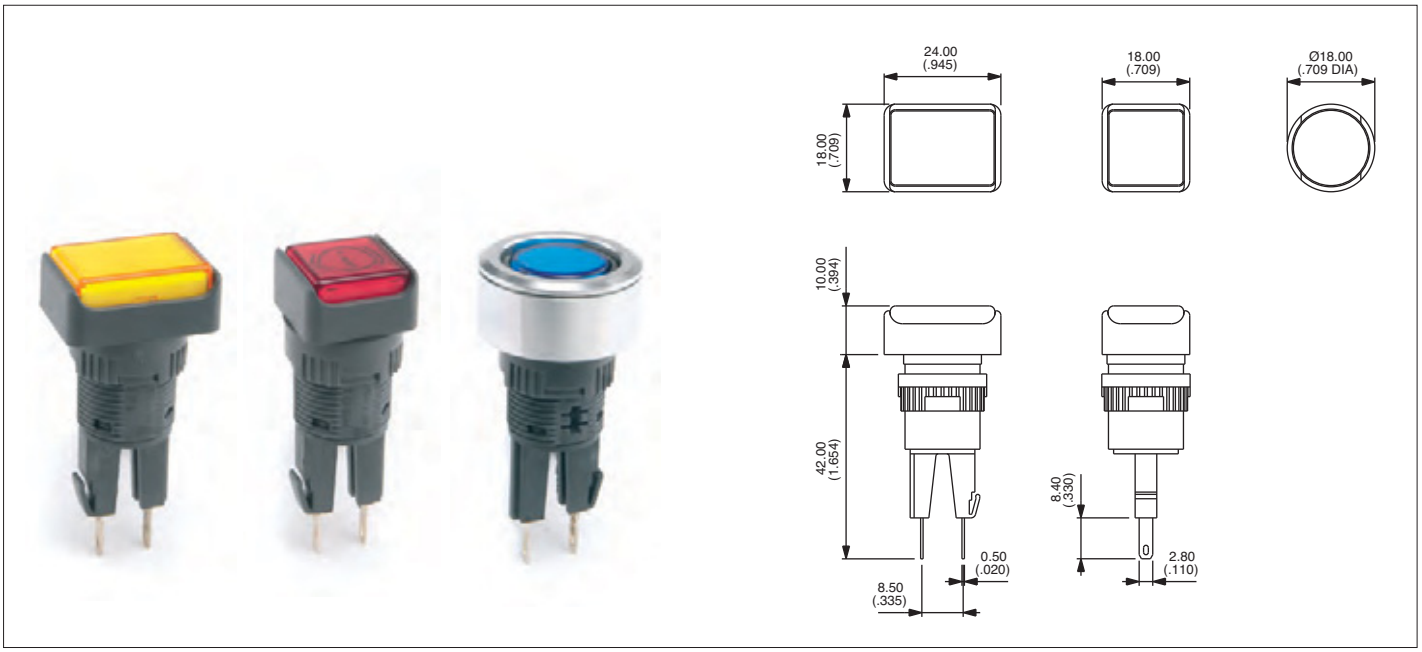

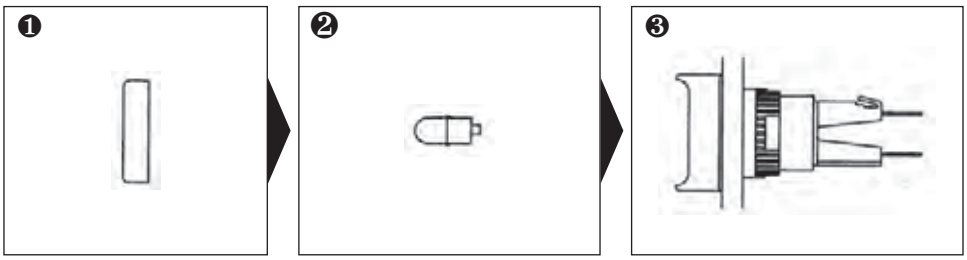

Screen

Bezel	Colour	Part No
▭	black	**A0161A**
▭	red	**A0161B**
▭	amber	**A0161C**
▭	yellow	**A0161D**
▭	green	**A0161E**
▭	blue	**A0161F**
▭	clear	**A0161G**
▭	white	**A0161J**
□	black	**A0162A**
□	red	**A0162B**
□	amber	**A0162C**
□	yellow	**A0162D**
□	green	**A0162E**
□	blue	**A0162F**
□	clear	**A0162G**
□	white	**A0162J**
○	black	**A0163A**
○	red	**A0163B**
○	amber	**A0163C**
○	yellow	**A0163D**
○	green	**A0163E**
○	blue	**A0163F**
○	clear	**A0163G**
○	white	**A0163J**

Lamp

Lamp	Voltage	Part No
Filament	6.3V	**A0141A**
Filament	14V	**A0141B**
Filament	28V	**A0141C**
Filament	36V	**A0141D**
Filament	48V	**A0141E**
Filament	60V	**A0141F**
Neon	110V	**A0143G**
Neon	220V	**A0143H**
LED	6V red	**A0142L1**
LED	6V green	**A0142L2**
LED	6V amber	**A0142L3**
LED	12V red	**A0142M1**
LED	12V green	**A0142M2**
LED	12V amber	**A0142M3**
LED	12V blue	**A0142M4**
LED	12V white	**A0142M5**
LED	24V red	**A0142N1**
LED	24V green	**A0142N2**
LED	24V amber	**A0142N3**
LED	24V blue	**A0142N4**
LED	24V white	**A0142N5**
LED	48V red	**A0142P1**
LED	48V green	**A0142P2**
LED	48V amber	**A0142P3**

Operator

Bezel	Description	Part No
▭	Indicator	**A0171**
□	Indicator	**A0172**
○	Indicator	**A0173**

UNSEALED INDICATORS (IP40) :
add "01" to end of **operator** model number.

SCREEN ENGRAVING / INSERTABLE LEGENDS : contact APEM

Bezel: ▭ rectangular, □ square, ○ round

A01 series

Rotary lever switches

Panel cut-out Ø 16 (.630)

A rotary lever switch assembly requires :
operator + switch block.
To order these elements, select desired model numbers from tables below.
Example : IP65 rectangular rotary switch with long lever, clockwise rotation, single pole, 2 positions, maintained = A019109 and A0151BUL.

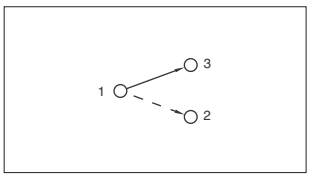

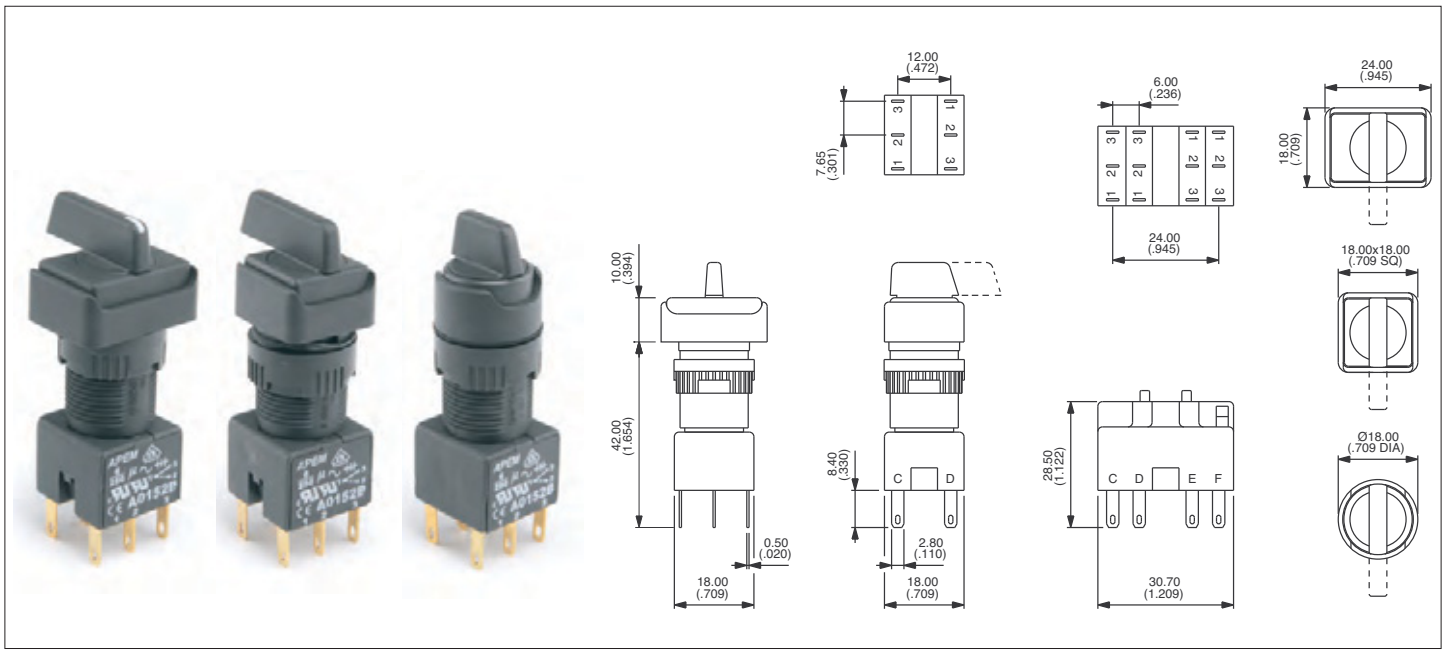

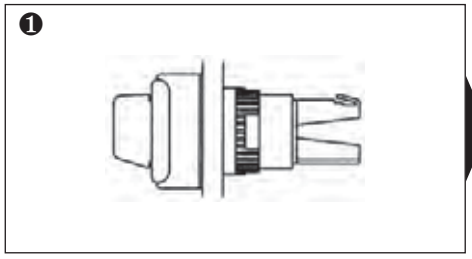

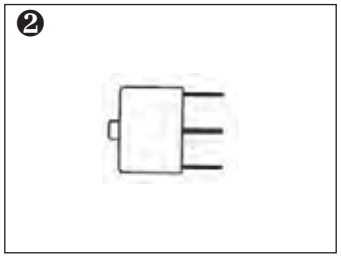

Operator

Pole	Bezel	Description	Short lever	Long lever
1 or 2	▭	2 pos. maintained	**A019209**	**A019109•**
1 or 2	▭	2 pos. momentary	**A019210**	**A019110•**
3 or 4	▭	2 pos. maintained	**A019211**	**A019111•**
3 or 4	▭	2 pos. momentary	**A019212**	**A019112•**
1 or 2	▭	3 pos. maintained	**A019205**	**A019105**
1 or 2	▭	3 pos. momentary	**A019206**	**A019106**
1 or 2	▭	3 pos. mainL, momR	**A019207**	**A019107**
1 or 2	▭	3 pos. momL, mainR	**A019208**	**A019108**
1 or 2	□	2 pos. maintained	**A019409**	**A019309•**
1 or 2	□	2 pos. momentary	**A019410**	**A019310•**
3 or 4	□	2 pos. maintained	**A019411**	**A019311•**
3 or 4	□	2 pos. momentary	**A019412**	**A019312•**
1 or 2	□	3 pos. maintained	**A019405**	**A019305**
1 or 2	□	3 pos. momentary	**A019406**	**A019306**
1 or 2	□	3 pos. mainL, momR	**A019407**	**A019307**
1 or 2	□	3 pos. momL, mainR	**A019408**	**A019308**
1 or 2	○	2 pos. maintained	**A019609**	**A019509•**
1 or 2	○	2 pos. momentary	**A019610**	**A019510•**
3 or 4	○	2 pos. maintained	**A019611**	**A019511•**
3 or 4	○	2 pos. momentary	**A019612**	**A019512•**
1 or 2	○	3 pos. maintained	**A019605**	**A019505**
1 or 2	○	3 pos. momentary	**A019606**	**A019506**
1 or 2	○	3 pos. mainL, momR	**A019607**	**A019507**
1 or 2	○	3 pos. momL, mainR	**A019608**	**A019508**

Switch block

No of poles	Part No
Single pole	**A0151B**
Double pole	**A0152B**
Three pole	**A0155B**
Four pole	**A0153B**

Lever Positions

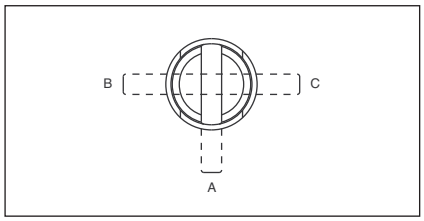

• Lever Rotation - 2 position switches

The model numbers shown are for switches with clockwise lever rotation.
For anticlockwise rotation, replace :

09	with	**01**
10	with	**02**
11	with	**03**
12	with	**04**

at the end of the model number.

Optional Engraving on Lever end

See above photo left.
To order, add "WL" to the end of the operator part No.
Example : A019609WL..

Bezel: ▭ rectangular, □ square, ○ round, 'pos' - position, 'mainL' - maintained left, 'momR' - momentary right, etc

G

A01 series

Keylock switches

Panel cut-out Ø 16 (.630)

A keylock switch assembly requires :
operator + switch block.
To order these elements, select desired model numbers from tables below.
Example : IP65 rectangular keyswitch, clockwise rotation, single pole, 2 positions, maintained = A018125 and A0151BUL.

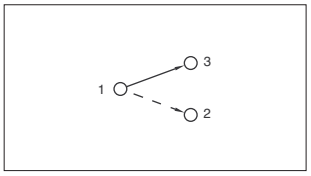

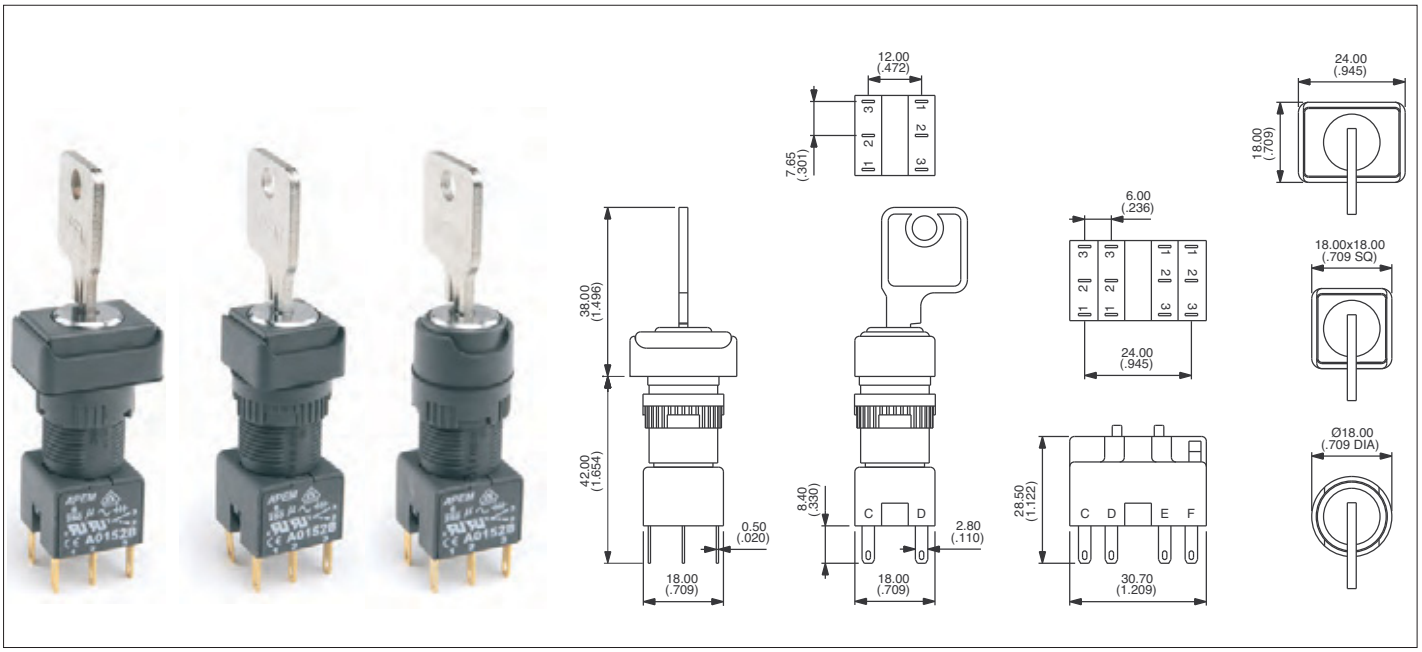

❶

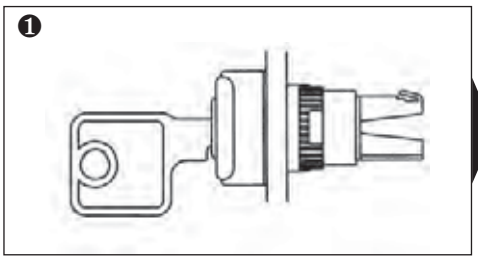

❷

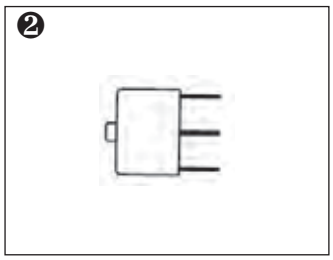

Operator

Pole	Bezel	Description	Part No	Key removable
1 or 2	▭	2 pos. maintained	**A018123**	A
1 or 2	▭	2 pos. maintained	**A018125•**	A-B
1 or 2	▭	2 pos. momentary	**A018124•**	A
3 or 4	▭	2 pos. maintained	**A018127•**	A-B
3 or 4	▭	2 pos. momentary	**A018128•**	A
1 or 2	▭	3 pos. maintained	**A018105**	A-B-C
1 or 2	▭	3 pos. momentary	**A018106**	A
1 or 2	▭	3 pos. mainL, momR	**A018107**	A-B
1 or 2	▭	3 pos. momL, mainR	**A018108**	A-C
1 or 2	□	2 pos. maintained	**A018223**	A
1 or 2	□	2 pos. maintained	**A018225•**	A-B
1 or 2	□	2 pos. momentary	**A018224•**	A
3 or 4	□	2 pos. maintained	**A018227•**	A-B
3 or 4	□	2 pos. momentary	**A018228•**	A
1 or 2	□	3 pos. maintained	**A018205**	A-B-C
1 or 2	□	3 pos. momentary	**A018206**	A
1 or 2	□	3 pos. mainL, momR	**A018207**	A-B
1 or 2	□	3 pos. momL, mainR	**A018208**	A-C
1 or 2	○	2 pos. maintained	**A018323**	A
1 or 2	○	2 pos. maintained	**A018325•**	A-B
1 or 2	○	2 pos. momentary	**A018324•**	A
3 or 4	○	2 pos. maintained	**A018327•**	A-B
3 or 4	○	2 pos. momentary	**A018328•**	A
1 or 2	○	3 pos. maintained	**A018305**	A-B-C
1 or 2	○	3 pos. momentary	**A018306**	A
1 or 2	○	3 pos. mainL, momR	**A018307**	A-B
1 or 2	○	3 pos. momL, mainR	**A018308**	A-C

Switch block

No of poles	Part No
Single pole	**A0151B**
Double pole	**A0152B**
Three pole	**A0155B**
Four pole	**A0153B**

NON-REMOVABLE KEY POSITIONS / ON-ON-ON FUNCTION : contact APEM.

Key Positions

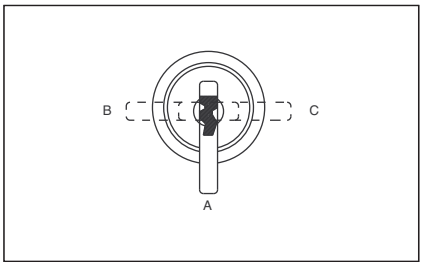

• Key Rotation - 2 position switches

The model numbers shown are for switches with clockwise key rotation.
For anticlockwise rotation, replace :

25	with	**01**
24	with	**02**
27	with	**03**
28	with	**04**

at the end of the model number.

2 standard keys are supplied.
20 key barrel types available.

Bezel: ▭ rectangular, □ square, ○ round, 'pos' - position, 'mainL' - maintained left, 'momR' - momentary right, etc

G

A01 series

Emergency stop switches

Panel cut-out Ø 16 (.630)

- **Prominent 24 mm (.944) dia. or optional 40 mm (1.575) dia. red mushroom actuator**
- **Highly reliable positive break switch**
- **Push to shut off switch, twist to reset to ON**

An emergency stop switch assembly requires : operator + switch block.
To order, specify with single pole or double pole positive break switch block.

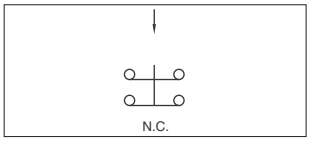

General specifications

- Min. mechanical life : 6.050 cycles (6 cycles per minute)
- Operating force / torque : 16 N / 0,1 Nm
- Operating temperature : -20°C to +55°C
- Solder heat resistance : 350°C, 5 secs (IEC 68-2-2-20Tb, method 2)
- Degree of environmental protection (IEC 529) :
  IP65 front of panel, IP40 back of panel
- Switch terminals : solder/quick-connect 2,8 mm (.110) (IEC 68-2-20)

Electrical specifications

- Current/voltage rating :
  1,5A 250VAC AC-15
- Contact gap : > 3 mm (.118)
- Dielectric strength : 2.900V
- Electrical life : 6.050 cycles

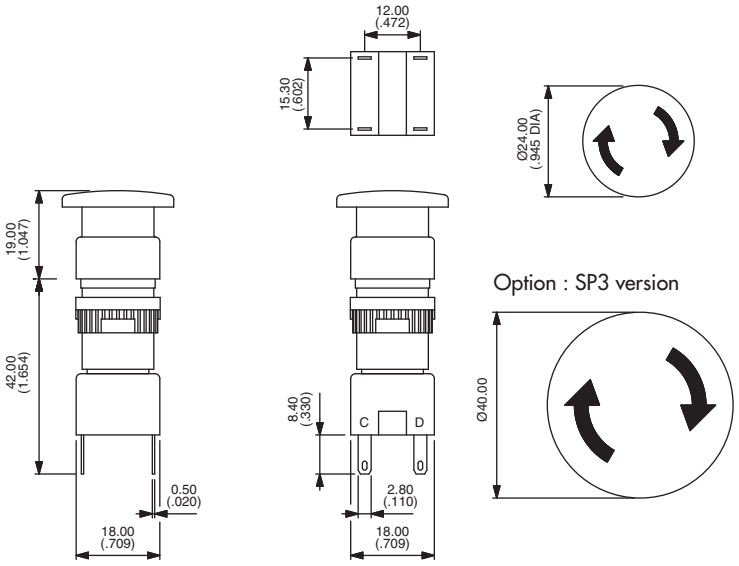

❶

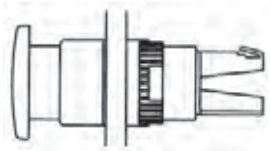

❷

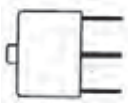

Accessory

Ø 60 mm Self Adhesive Label

Description	Part No
Yellow label with text	**A01YL1**
Yellow label	**A01YL2**

Operator

Description	Part No
24 mm Ø Emergency stop	**A01ES**
40 mm Ø Emergency stop	**A01ES SP3**

Switch block

No of poles	Part No
Single pole	**A0150B**
Double pole	**A0154B**

G

A01 series

Emergency stop switches/mushroom head pushbutton switches

Fitted in enclosures

- **Prominent 40 mm (1.575) dia. mushroom actuator, twist to release**
- **Highly reliable positive break switching on E-Stop**
- **Sealed to IP65**
- **Robust polycarbonate enclosures**
- **Knockouts for popular conduit sizes**
- **Double pole changeover switch blocks available for momentary/maintained mushroom head pushbuttons.**

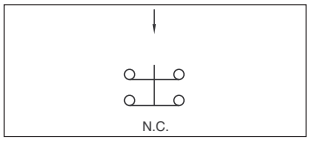

Emergency stop

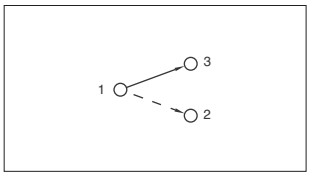

Momentary & maintained

Technical specifications

- Contact rating : Pushbutton switch : 6A 250VAC - E-Stop : 1,5A 250VAC
- Dimensions : 65 x 65 x 57 mm
- Electrical life : Pushbutton switch : 50 000 cycles - E-Stop : 6 050 cycles
- Operating temperature : -20°C to +55°C

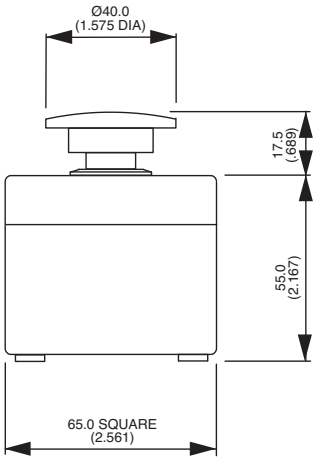

Description	Part No
Emergency stop	**A01ESSP354B + PEA01**
Black momentary	**A01MMASP352B + PEA01**
Red momentary	**A01MMBSP352B + PEA01**
Yellow momentary	**A01MMDSP352B + PEA01**
Green momentary	**A01MMESP352B + PEA01**
Blue momentary	**A01MMFSP352B + PEA01**
Black maintained	**A01MXASP352B + PEA01**
Red maintained	**A01MXBSP352B + PEA01**
Yellow maintained	**A01MXDSP352B + PEA01**
Green maintained	**A01MXESP352B + PEA01**
Blue maintained	**A01MXFSP352B + PEA01**

OPTIONS

12A 250V versions or custom printing on mushroom head actuators : contact APEM.

A01 series

Mushroom head pushbutton switches

Panel cut-out Ø 16 (.630)

- **Prominent 24 mm (.944) dia. or optional 40 mm (1.575) dia. mushroom actuators**
- **Momentary and maintained functions**
  Momentary function versions are unmarked.
  Maintained function versions are twist release (arrows indicate direction of twist)
- **Various coloured mushroom actuators are available.**

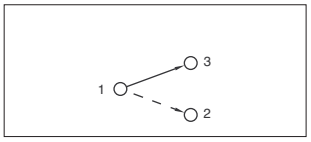

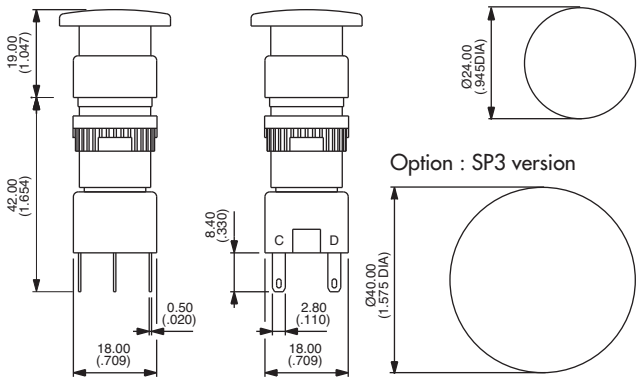

❶

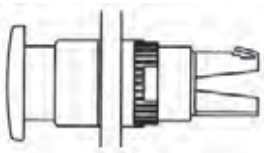

❷

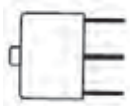

Operator

Actuator	Description	Part No
24mmØ	Black momentary	**A01MMA**
24mmØ	Red momentary	**A01MMB**
24mmØ	Yellow momentary	**A01MMD**
24mmØ	Green momentary	**A01MME**
24mmØ	Blue momentary	**A01MMF**
24mmØ	Black maintained	**A01MXA**
24mmØ	Red maintained	**A01MXB**
24mmØ	Yellow maintained	**A01MXD**
24mmØ	Green maintained	**A01MXE**
24mmØ	Blue maintained	**A01MXF**
40mmØ	Black momentary	**A01MMA SP3**
40mmØ	Red momentary	**A01MMB SP3**
40mmØ	Yellow momentary	**A01MMD SP3**
40mmØ	Green momentary	**A01MME SP3**
40mmØ	Blue momentary	**A01MMF SP3**
40mmØ	Black maintained	**A01MXA SP3**
40mmØ	Red maintained	**A01MXB SP3**
40mmØ	Yellow maintained	**A01MXD SP3**
40mmØ	Green maintained	**A01MXE SP3**
40mmØ	Blue maintained	**A01MXF SP3**

Switch block

No of poles	Part No
Single pole	**A0151B**
Double pole	**A0152B**
Three pole	**A0155B**
Four pole	**A0153B**

G

A1-A01 series

Industrial controls

Accessories

FLUSH MOUNTING BEZELS

Dark grey plastic material - supplied with sealing washer

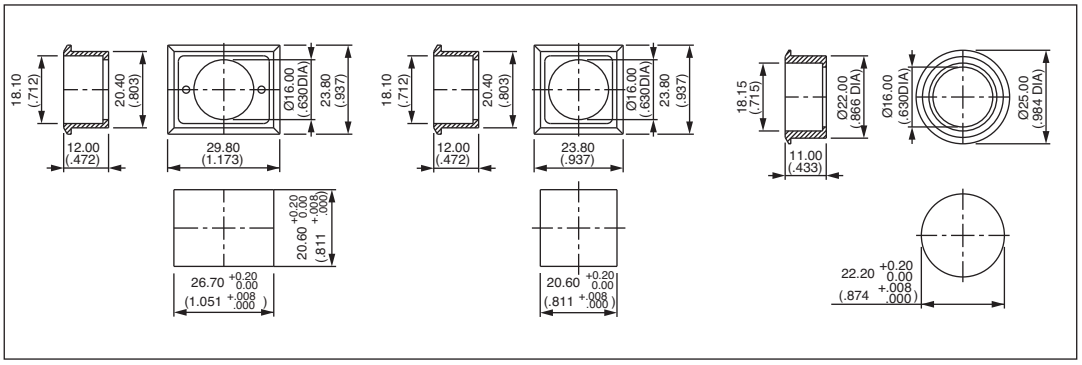

Rectangular **A01FM1** Square **A01FM** Round **A01FM2**

FLUSH MOUNTING BEZELS

Metal versions

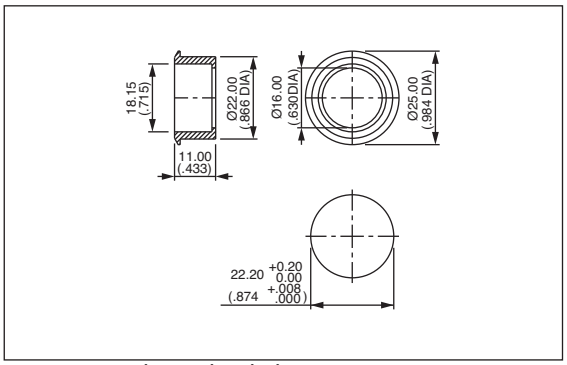

Round, anodised aluminium **A01FMM**
Round, matt black **A01FMMG**

PCB SOCKET

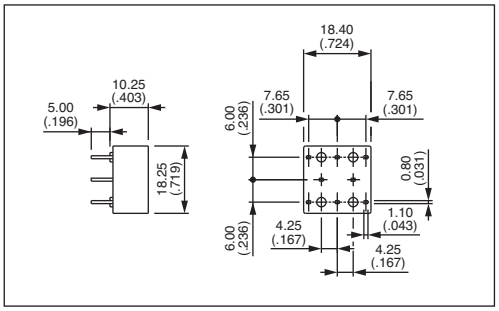

Single pole, non illuminated	**A01PC1**
Double pole, non illuminated	**A01PC2**
Single pole, illuminated	**A01PC3**
Double pole, illuminated	**A01PC4**
Indicator	**A01PC5**
Single pole, E-stop	**A01PC6**
Double pole, E-stop	**A01PC7**

FLAPGUARDS

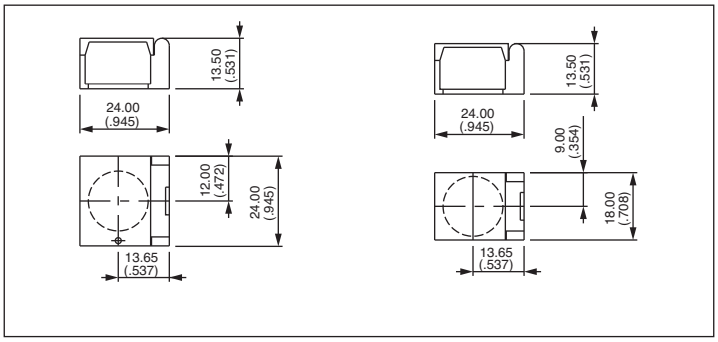

Rectangular **A01FG1** Square/round **A01FG2**

G

METAL GUARDS

→ Slot as alternative to Ø 2 mm hole - Material : 1 mm thick aluminium.

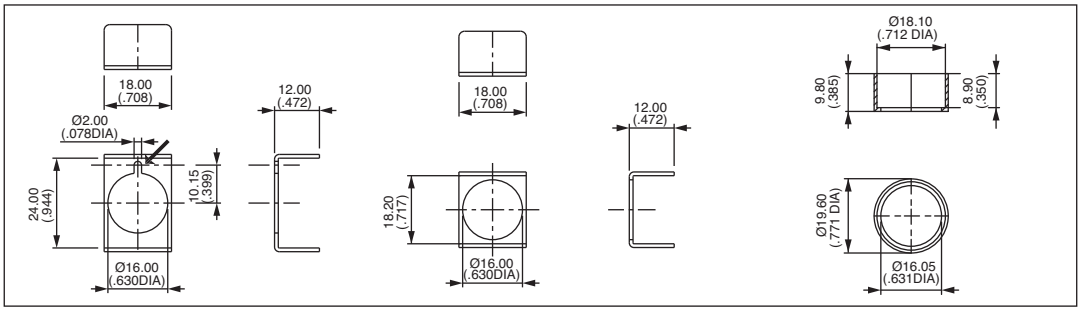

Rectangular **A01MG1** Square **A01MG** Round, natural **A01MG2** Matt black **A01MG2G**

ANTI ROTATION RING

Recommended to prevent product rotation

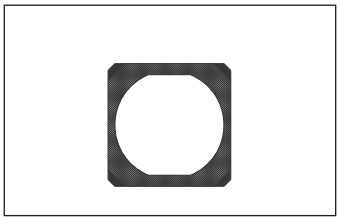

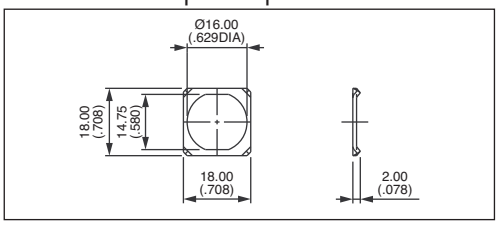

A01LW

SWITCHBLOCK TERMINAL GUARDS

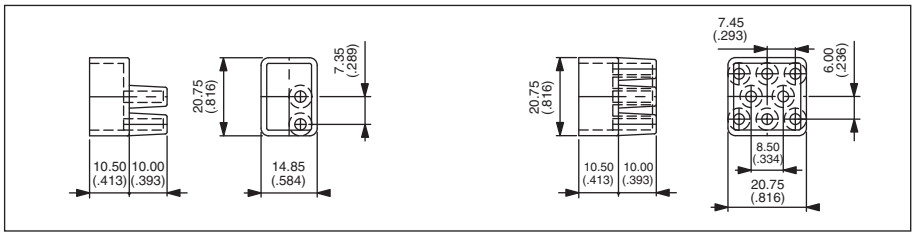

2 way **A01RTC2** 8 way **A01RTC8**

BLANKING PLUGS

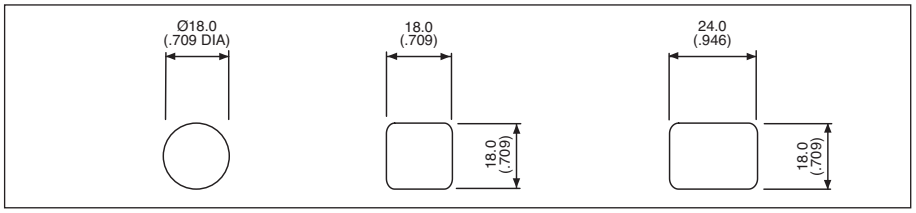

Round **A0133** Square **A0132** Rectangular **A0131**

RESISTOR ASSEMBLY

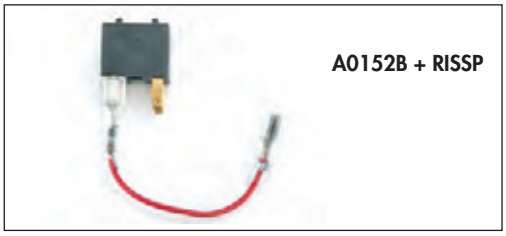

A0152B + RISSP

Resistor assembly - 2 stage illumination

(DIM) normally closed (BRIGHT) normally open

G

Modular construction / panel mounting

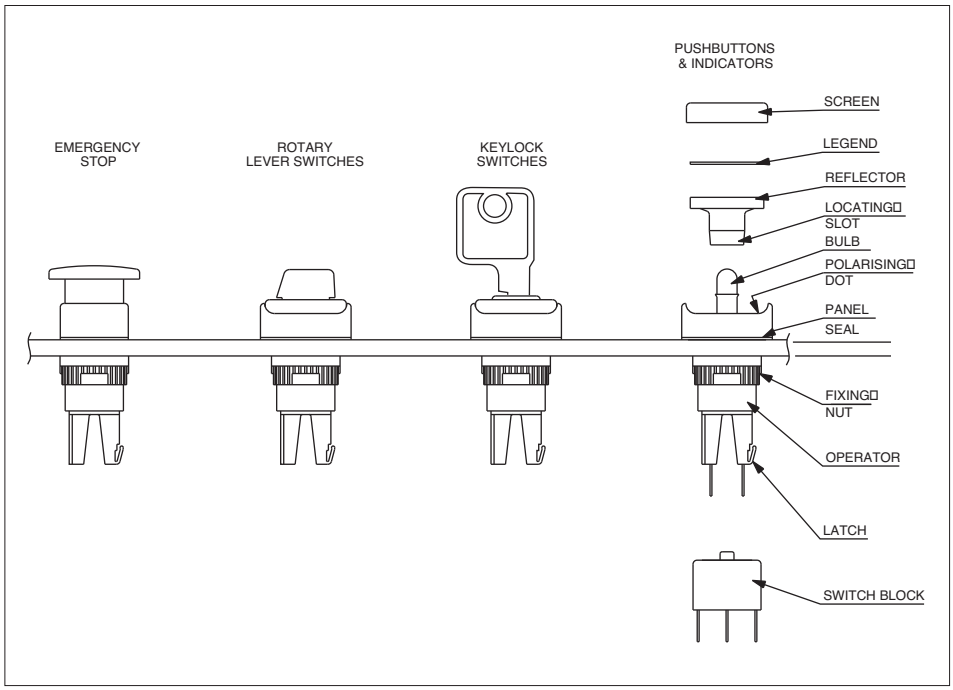

PANEL CUT-OUT

Round & square operators only

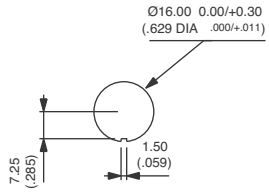

Rectangular operators only

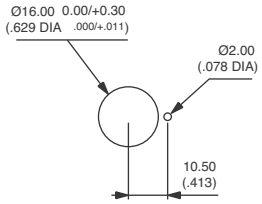

Max. panel thickness : 8 mm (.315)

PANEL MOUNTING ASSEMBLY

- Drill/punch hole shaped as above.
- Assemble front operator through hole, fit fixing nut and tighten to a maximum torque of 0,8Nm using tool No 30-0001.
- Wire chosen switch block as required and slide onto operator until latch engages.
- Fit bulb if required using tool No 30-0002.
- Snap screen onto reflector assembly with legend in between if required and snap onto front operator TAKING CARE TO LINE UP THE LOCATING SLOT WITH THE POLARISING DOT, and not to damage the seal.

TO REMOVE BULB

Remove reflector/screen assembly. Use the bulb extractor 30-0002 to remove the bulb.

SWITCH BLOCK

To assemble switch block to front operator, TAKE CARE TO LINE UP SWITCH BLOCK WITH FRONT OPERATOR. Once in position, slide on to front operator. NB. : Ensure latch is fully engaged correctly onto the switch block.

To remove switch block, depress the latch and slide the switch block off the operator.

G

FIXING NUT KEY

30-0001

BULB REMOVER

30-0002

A02 series

Illuminated or non-illuminated pushbutton switches

Panel cut-out Ø 22 (.866) or 29,5 x 21,5 (1.160x.846)

A pushbutton assembly requires :
screen + lamp (if illuminated) + operator + one or two switch blocks.
To order these elements, select desired model numbers from tables below.
Example : IP65 illuminated rectangular maintained pushbutton, switch block with 2 N.O. contacts, red screen and 12V red LED assembly = A0261B, A0242J1, A0201X and A02503UL.

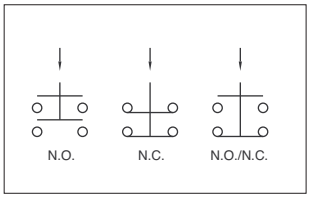

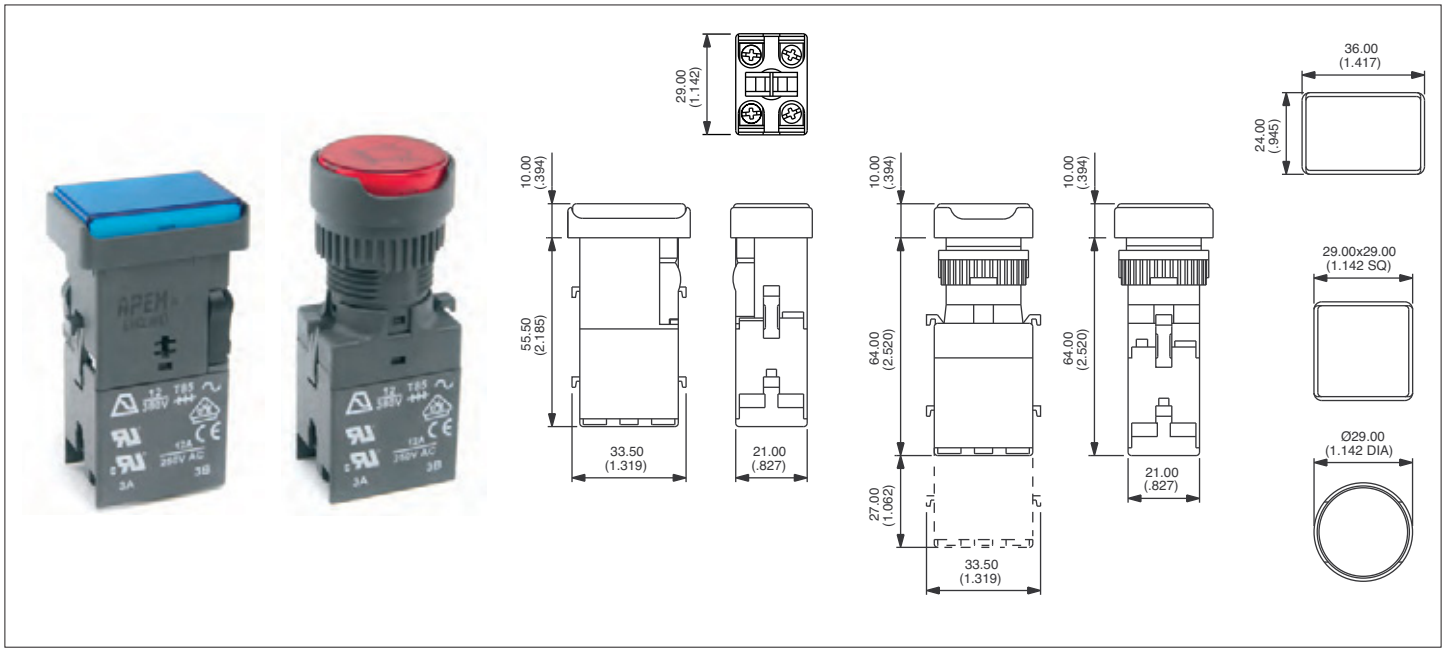

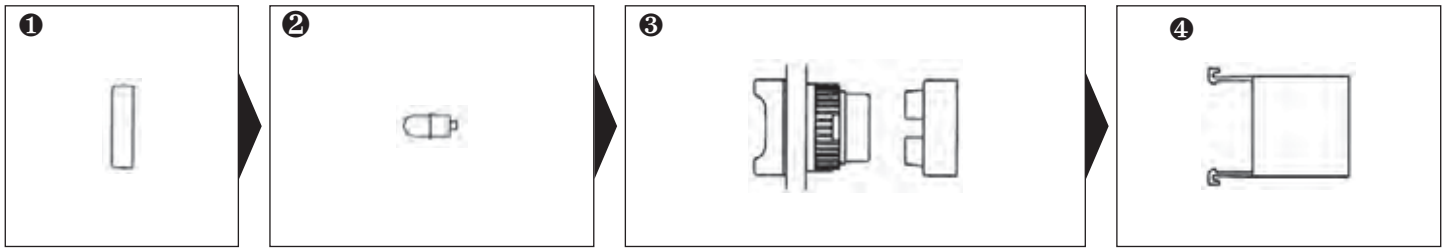

Screen

Bezel	Colour	Part No
▭	black	**A0261A**
▭	red	**A0261B**
▭	amber	**A0261C**
▭	yellow	**A0261D**
▭	green	**A0261E**
▭	blue	**A0261F**
▭	clear	**A0261G**
▭	white	**A0261J**
□	black	**A0262A**
□	red	**A0262B**
□	amber	**A0262C**
□	yellow	**A0262D**
□	green	**A0262E**
□	blue	**A0262F**
□	clear	**A0262G**
□	white	**A0262J**
○	black	**A0263A**
○	red	**A0263B**
○	amber	**A0263C**
○	yellow	**A0263D**
○	green	**A0263E**
○	blue	**A0263F**
○	clear	**A0263G**
○	white	**A0263J**

Lamp

Lamp	Voltage	Part No
Filament	6.3V	**A0141A**
Filament	14V	**A0141B**
Filament	28V	**A0141C**
Filament	36V	**A0141D**
Filament	48V	**A0141E**
Filament	60V	**A0141F**
Neon	110V	**A0143G**
Neon	220V	**A0143H**
LED	6V red	**A0142L1**
LED	6V green	**A0142L2**
LED	6V amber	**A0142L3**
LED	12V red	**A0142M1**
LED	12V green	**A0142M2**
LED	12V amber	**A0142M3**
LED	12V blue	**A0142M4**
LED	12V white	**A0142M5**
LED	24V red	**A0142N1**
LED	24V green	**A0142N2**
LED	24V amber	**A0142N3**
LED	24V blue	**A0142N4**
LED	24V white	**A0142N5**
LED	48V red	**A0142P1**
LED	48V green	**A0142P2**
LED	48V amber	**A0142P3**

Operator

Bezel	Description	Lamp type	Part No
▭	Illum, momentary	Lamp/LED	**A0201Y**
▭	Illum, maintained	Lamp/LED	**A0201X**
▭	Non-illum, maintained		**A0203X**
▭	Non-illum, momentary		**A0203Y**
□	Illum, momentary	Lamp/LED	**A0204Y**
□	Illum, maintained	Lamp/LED	**A0204X**
□	Non-illum, momentary		**A0206Y**
□	Non-illum, maintained		**A0206X**
○	Illum, momentary	Lamp/LED	**A0207Y**
○	Illum, maintained	Lamp/LED	**A0207X**
○	Non-illum, momentary		**A0209Y**
○	Non-Illum, maintained		**A0209X**

UNSEALED SWITCHES **(IP40)** :
add "01" to end of **operator** model number.

Switch block

Contacts	Part No
1 N.O.	**A02501**
1 N.C.	**A02502**
2 N.O.	**A02503**
2 N.C.	**A02504**
1 N.O./1 N.C.	**A02505**

Second switch block

Contacts	Part No
1 N.O.	**A02506**
1 N.C.	**A02507**
2 N.O.	**A02508**
2 N.C.	**A02509**
1 N.O./1 N.C.	**A02510**

To achieve 3 or 4 pole switching, add second switch block, from above table.

SCREEN ENGRAVING / INSERTABLE LEGENDS : contact APEM.

Bezel: ▭ rectangular, □ square, ○ round, 'Illum' - illuminated, 'Non-illum' - non illuminated

The company reserves the right to change specifications without notice.

A02 series

Metal bezel pushbutton switches and indicators

Panel cut-out Ø 22 (.866)

A pushbutton assembly requires :
screen + lamp (if illuminated) + operator + one or two switch blocks.
An indicator assembly requires : screen + lamp + operator
To order these elements, select desired model numbers from tables below.
Example : IP65 illuminated metal bezel maintained pushbutton, switch block with 2 N.O. contacts, red screen and 12V red LED assembly = A0263B, A0244J1, A0211X and A02503UL.

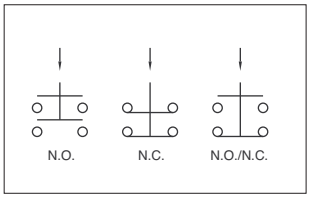

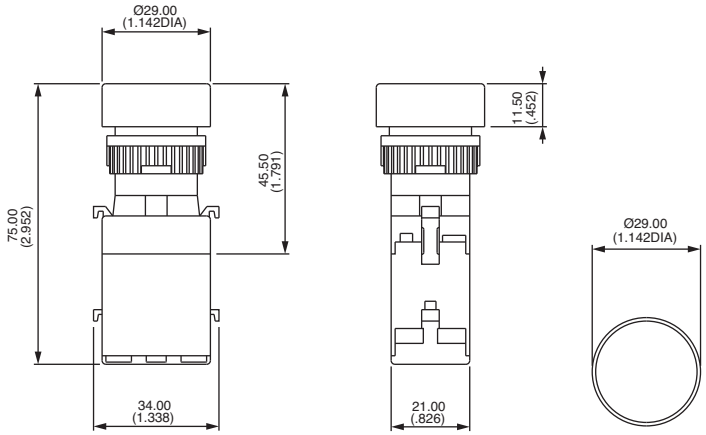

❶

❷

❸

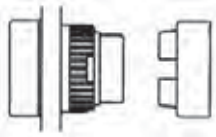

❹

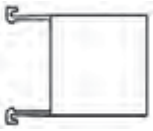

Screen

Bezel	Colour	Part No
○	black	**A0263A**
○	red	**A0263B**
○	amber	**A0263C**
○	yellow	**A0263D**
○	green	**A0263E**
○	blue	**A0263F**
○	clear	**A0263G**
○	white	**A0263J**

Lamp

Lamp	Voltage	Part No
Filament	6.3V	**A0141A**
Filament	14V	**A0141B**
Filament	28V	**A0141C**
Filament	36V	**A0141D**
Filament	48V	**A0141E**
Filament	60V	**A0141F**
Neon	110V	**A0143G**
Neon	220V	**A0143H**
LED	6V red	**A0142L1**
LED	6V green	**A0142L2**
LED	6V amber	**A0142L3**
LED	12V red	**A0142M1**
LED	12V green	**A0142M2**
LED	12V amber	**A0142M3**
LED	12V blue	**A0142M4**
LED	12V white	**A0142M5**
LED	24V red	**A0142N1**
LED	24V green	**A0142N2**
LED	24V amber	**A0142N3**
LED	24V blue	**A0142N4**
LED	24V white	**A0142N5**
LED	48V red	**A0142P1**
LED	48V green	**A0142P2**
LED	48V amber	**A0142P3**

Operator

Bezel	Description	Lamp type	Part No
○	Illum, momentary	Lamp/LED	**A0210Y**
○	Illum, maintained	Lamp/LED	**A0210X**
○	Non-illum, momentary		**A0212Y**
○	Non-illum, maintained		**A0212X**
○	Illum, indicator	Lamp/LED	**A0277**

Std bezel material : nickel plated brass.
For optional black finish, add "G" to the end of **operator** model number.

UNSEALED SWITCHES **(IP40)** :
add "01" to end of **operator** model number.

Switch block

Contacts	Part No
1 N.O.	**A02501**
1 N.C.	**A02502**
2 N.O.	**A02503**
2 N.C.	**A02504**
1 N.O./1 N.C.	**A02505**

Second switch block

Contacts	Part No
1 N.O.	**A02506**
1 N.C.	**A02507**
2 N.O.	**A02508**
2 N.C.	**A02509**
1 N.O./1 N.C.	**A02510**

To achieve 3 or 4 pole switching, add second switch block, from above table.

SCREEN ENGRAVING / INSERTABLE LEGENDS : contact APEM.

Bezel: ▭ rectangular, ▢ square, ○ round, 'Illum' - illuminated, 'Non-illum' - non illuminated

A02 series

Flush mounting pushbutton switches and indicators

Panel cut-out Ø 30 (1.181)

A pushbutton assembly requires :
screen + lamp (if illuminated) + operator + one or two switch blocks.
An indicator assembly requires : screen + lamp + operator
To order these elements, select desired model numbers from tables below.
Example : IP65 illum. flush mounting maintained pushbutton, switch block with 2 N.O. contacts, red screen and 12V red LED assembly = A0263B, A0244J1, A0213X and A02503UL.

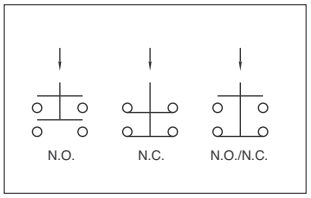

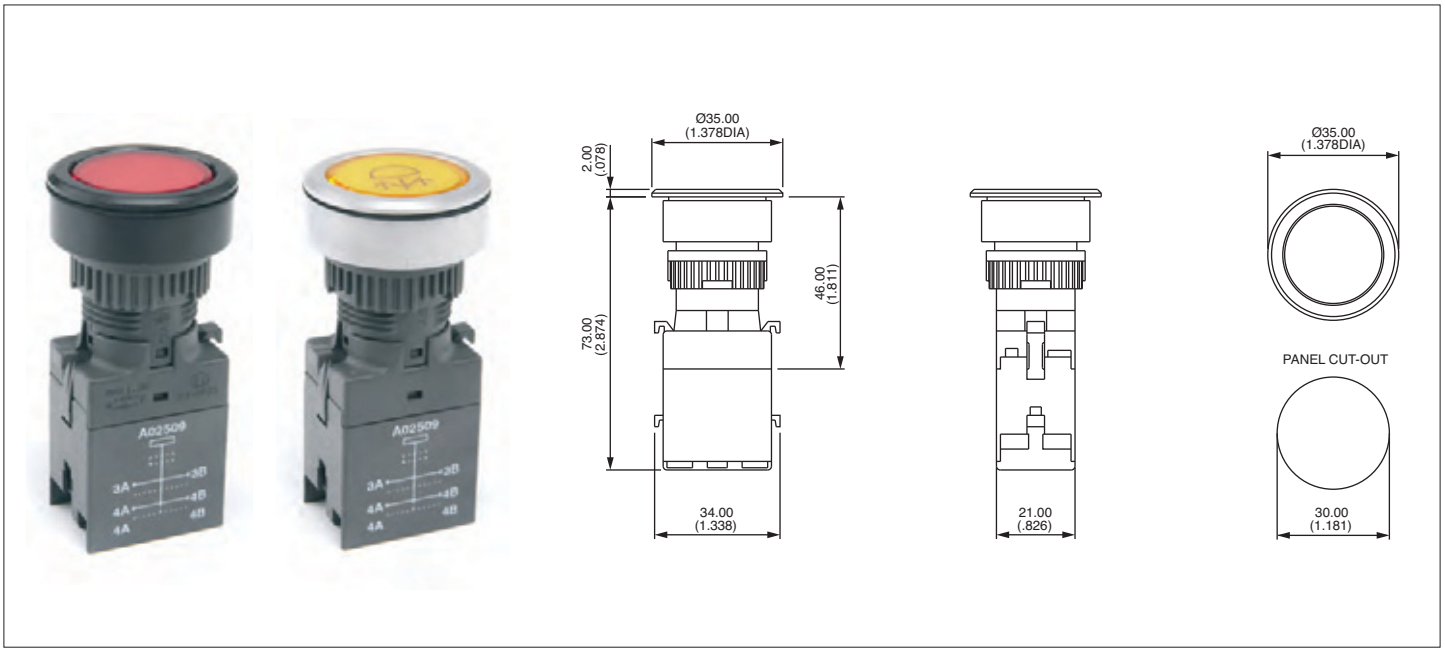

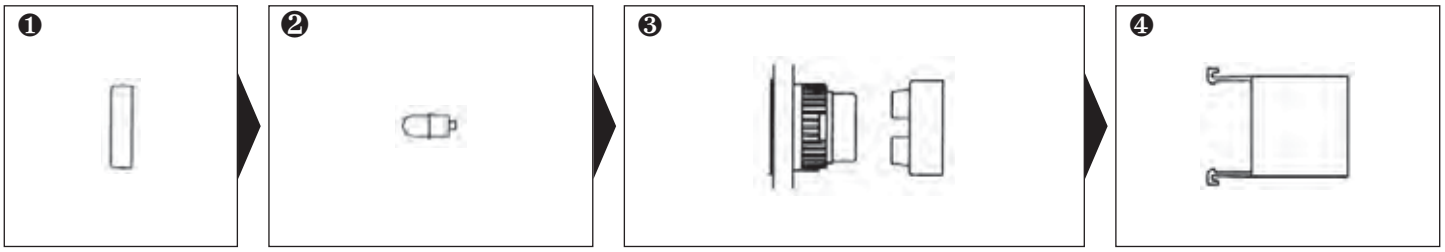

Screen

Bezel	Colour	Part No
○	black	**A0263A**
○	red	**A0263B**
○	amber	**A0263C**
○	yellow	**A0263D**
○	green	**A0263E**
○	blue	**A0263F**
○	clear	**A0263G**
○	white	**A0263J**

Lamp

Lamp	Voltage	Part No
Filament	6.3V	**A0141A**
Filament	14V	**A0141B**
Filament	28V	**A0141C**
Filament	36V	**A0141D**
Filament	48V	**A0141E**
Filament	60V	**A0141F**
Neon	110V	**A0143G**
Neon	220V	**A0143H**
LED	6V red	**A0142L1**
LED	6V green	**A0142L2**
LED	6V amber	**A0142L3**
LED	12V red	**A0142M1**
LED	12V green	**A0142M2**
LED	12V amber	**A0142M3**
LED	12V blue	**A0142M4**
LED	12V white	**A0142M5**
LED	24V red	**A0142N1**
LED	24V green	**A0142N2**
LED	24V amber	**A0142N3**
LED	24V blue	**A0142N4**
LED	24V white	**A0142N5**
LED	48V red	**A0142P1**
LED	48V green	**A0142P2**
LED	48V amber	**A0142P3**

Operator

Bezel	Description	Lamp type	Part No
○	Illum, momentary	Lamp/LED	**A0214Y**
○	Illum, maintained	Lamp/LED	**A0214X**
○	Non-illum, momentary		**A0215Y**
○	Non-illum, maintained		**A0215X**
○	Illum, indicator	Lamp/LED	**A02791**

Std bezel material : silver anodised aluminium.
For optional black anodised aluminium, add "G" to end of **operator** model number.

UNSEALED SWITCHES **(IP40)** :
add "01" to end of **operator** model number.

Switch block

Contacts	Part No
1 N.O.	**A02501**
1 N.C.	**A02502**
2 N.O.	**A02503**
2 N.C.	**A02504**
1 N.O./1 N.C.	**A02505**

Second switch block

Contacts	Part No
1 N.O.	**A02506**
1 N.C.	**A02507**
2 N.O.	**A02508**
2 N.C.	**A02509**
1 N.O./1 N.C.	**A02510**

To achieve 3 or 4 pole switching, add second switch block, from above table.

SCREEN ENGRAVING / INSERTABLE LEGENDS : contact APEM.

Bezel: ▭ rectangular, ▭ square, ○ round, 'Illum' - illuminated, 'Non-illum' - non illuminated

A02 series

Indicators

Panel cut-out Ø 22 (.866) or 29,5 x 21,5 (1.160x.846)

An indicator assembly requires :
Screen + lamp, LED or LED assembly + operator.
To order these elements, select desired model numbers from tables below.
Example : IP65 rectangular indicator with red screen and 12V red LED assembly = A0261B, A0242J1 and A0272.

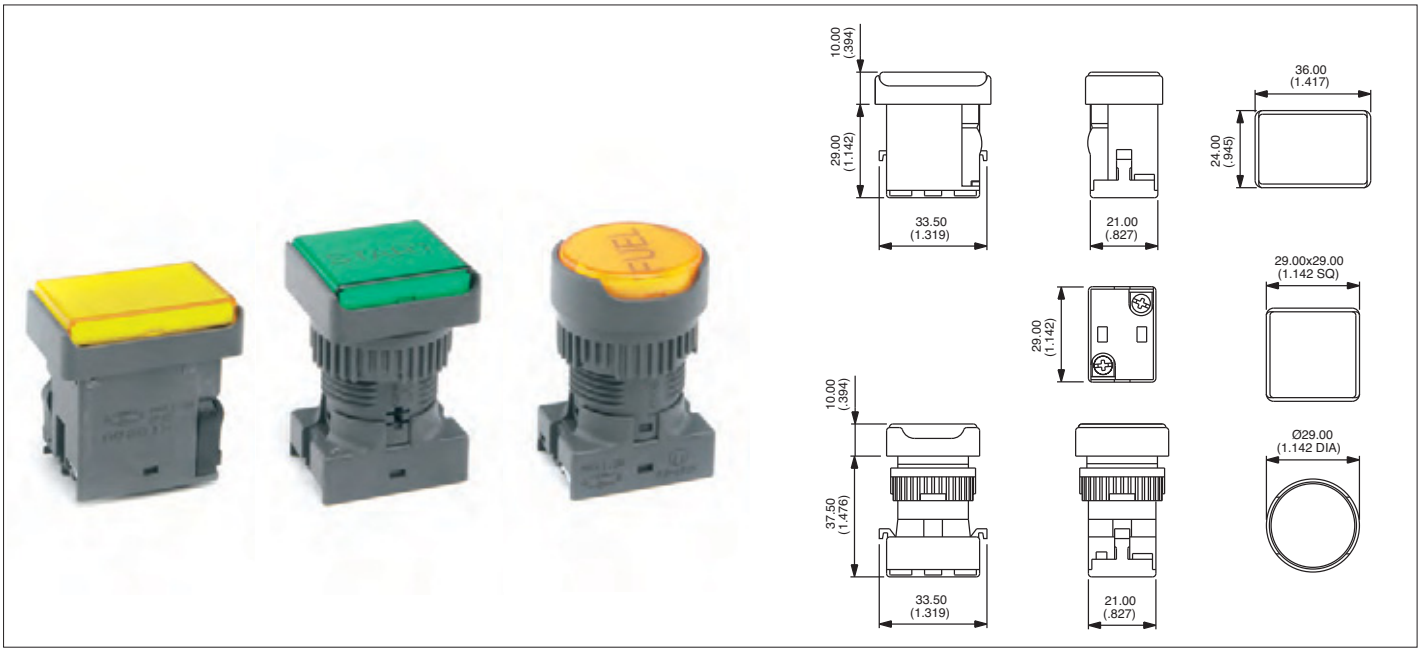

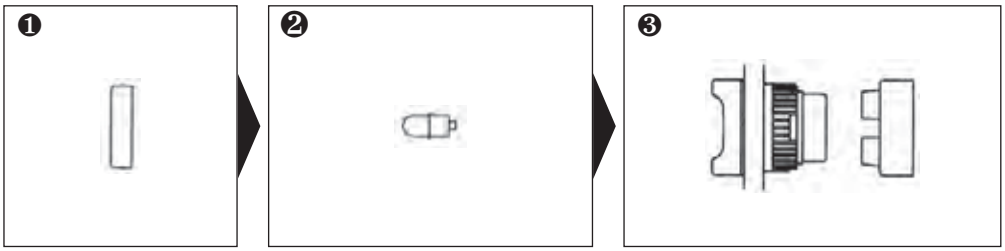

Screen

Bezel	Colour	Part No
▭	black	**A0261A**
▭	red	**A0261B**
▭	amber	**A0261C**
▭	yellow	**A0261D**
▭	green	**A0261E**
▭	blue	**A0261F**
▭	clear	**A0261G**
▭	white	**A0261J**
▯	black	**A0262A**
▯	red	**A0262B**
▯	amber	**A0262C**
▯	yellow	**A0262D**
▯	green	**A0262E**
▯	blue	**A0262F**
▯	clear	**A0262G**
▯	white	**A0262J**
○	black	**A0263A**
○	red	**A0263B**
○	amber	**A0263C**
○	yellow	**A0263D**
○	green	**A0263E**
○	blue	**A0263F**
○	clear	**A0263G**
○	white	**A0263J**

Lamp

Lamp	Voltage	Part No
Filament	6.3V	**A0141A**
Filament	14V	**A0141B**
Filament	28V	**A0141C**
Filament	36V	**A0141D**
Filament	48V	**A0141E**
Filament	60V	**A0141F**
Neon	110V	**A0143G**
Neon	220V	**A0143H**
LED	6V red	**A0142L1**
LED	6V green	**A0142L2**
LED	6V amber	**A0142L3**
LED	12V red	**A0142M1**
LED	12V green	**A0142M2**
LED	12V amber	**A0142M3**
LED	12V blue	**A0142M4**
LED	12V white	**A0142M5**
LED	24V red	**A0142N1**
LED	24V green	**A0142N2**
LED	24V amber	**A0142N3**
LED	24V blue	**A0142N4**
LED	24V white	**A0142N5**
LED	48V red	**A0142P1**
LED	48V green	**A0142P2**
LED	48V amber	**A0142P3**

Operator

Bezel	Description	Lamp type	Part No
▭	Indicator	Lamp/LED	**A0271**
▯	Indicator	Lamp/LED	**A0273**
○	Indicator	Lamp/LED	**A0275**

UNSEALED INDICATORS **(IP40)** :
add "01" to end of **operator** model number.

SCREEN ENGRAVING / INSERTABLE LEGENDS : contact APEM.

Bezel: ▭ rectangular, ▯ square, ○ round,

A02 series

Rotary switches

Panel cut-out Ø 22 (.866)

A rotary lever assembly requires :
operator + one or two switch blocks.
To order these elements, select desired model numbers from tables below.
Example : IP65 square 2 position maintained rotary switch with long lever, clockwise rotation, switch block with 2 N.O. contacts = A029107 and A02503UL.

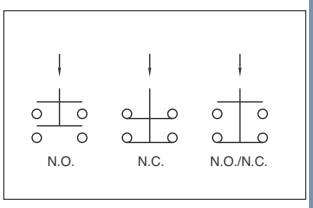

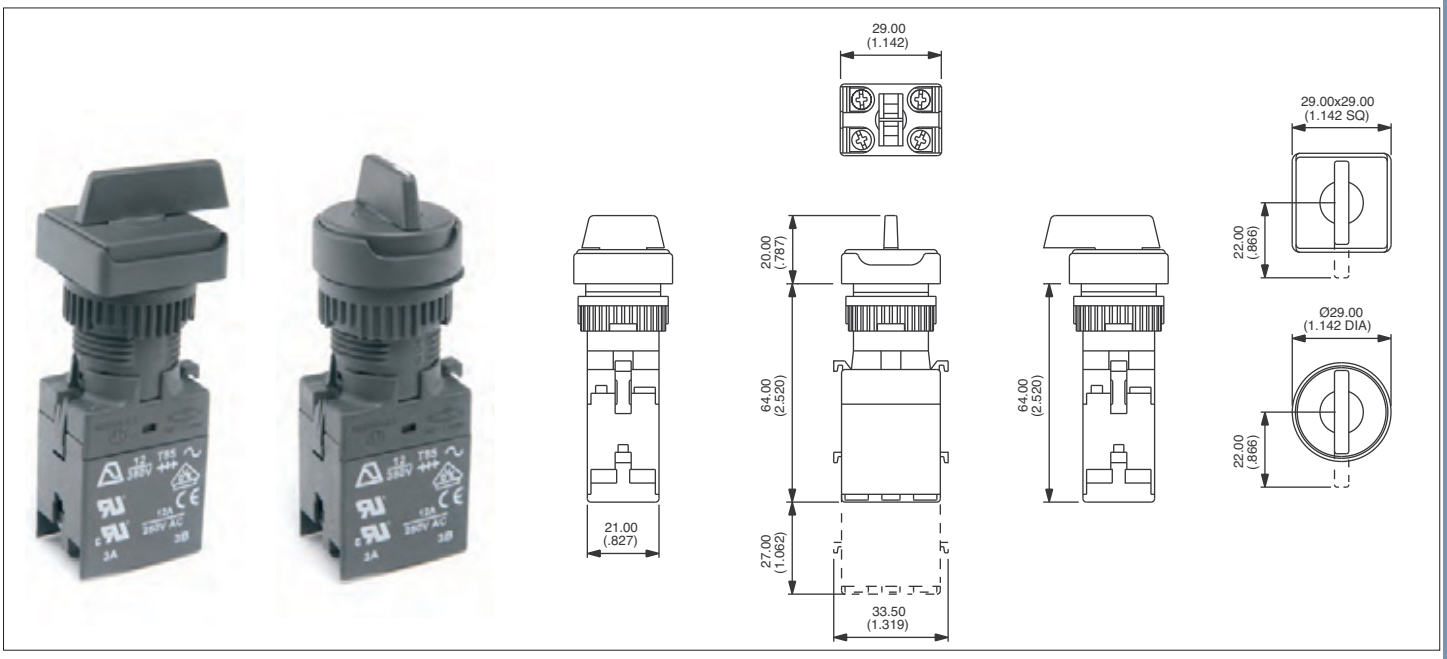

❶

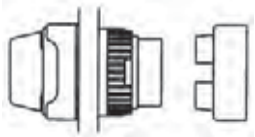

❷

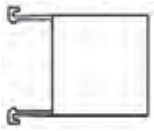

Operator

Bezel	Description	Short lever	Long lever
□	2 pos. maintained	**A029207**	**A029107•**
□	2 pos. momentary	**A029208**	**A029108•**
□	3 pos. maintained	**A029203**	**A029103**
□	3 pos. momentary	**A029204**	**A029104**
□	3 pos. mainL, momR	**A029205**	**A029105**
□	3 pos. momL, mainR	**A029206**	**A029106**
○	2 pos. maintained	**A029407**	**A029307•**
○	2 pos. momentary	**A029408**	**A029308•**
○	3 pos. maintained	**A029403**	**A029303**
○	3 pos. momentary	**A029404**	**A029304**
○	3 pos. mainL, momR	**A029405**	**A029305**
○	3 pos. momL, mainR	**A029406**	**A029306**

OPTION
To specify **flush mounting (Ø 30 mm) option**, add "FM" to the end of the part number (for round operators only).
Example : A029407FM.

Switch block

Contacts	Part No
1 N.O.	**A02501**
1 N.C.	**A02502**
2 N.O.	**A02503**
2 N.C.	**A02504**
1 N.O./1 N.C.	**A02505**

Second switch block

Contacts	Part No
1 N.O.	**A02506**
1 N.C.	**A02507**
2 N.O.	**A02508**
2 N.C.	**A02509**
1 N.O./1 N.C.	**A02510**

To achieve 3 or 4 pole switching, add second switch block, from above table.

Lever positions

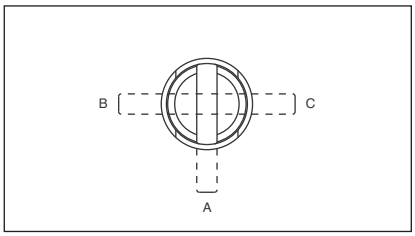

• Lever Rotation - 2 position switches

The model numbers shown are for switches with clockwise lever rotation.
For anticlockwise rotation, replace :

07 with **01**
08 with **02**

at the end of the model number.

Optional engraving on lever end

To order, add "WL" to the end of the part No.
Example : A029407WL.

Bezel: □ square, ○ round,

G

A02 series

Keylock switches

Panel cut-out Ø 22 or 29,5 x 21,5

A keyswitch assembly requires :
operator + one or two switch blocks.
To order these elements, select desired model numbers from tables below.
Example : IP65 square 2 position keyswitch, clockwise rotation, switch block with 2 N.O. contacts = A028220 and A02503UL.

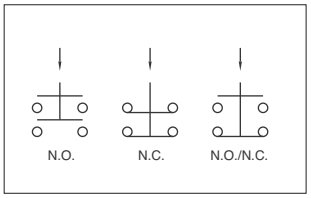

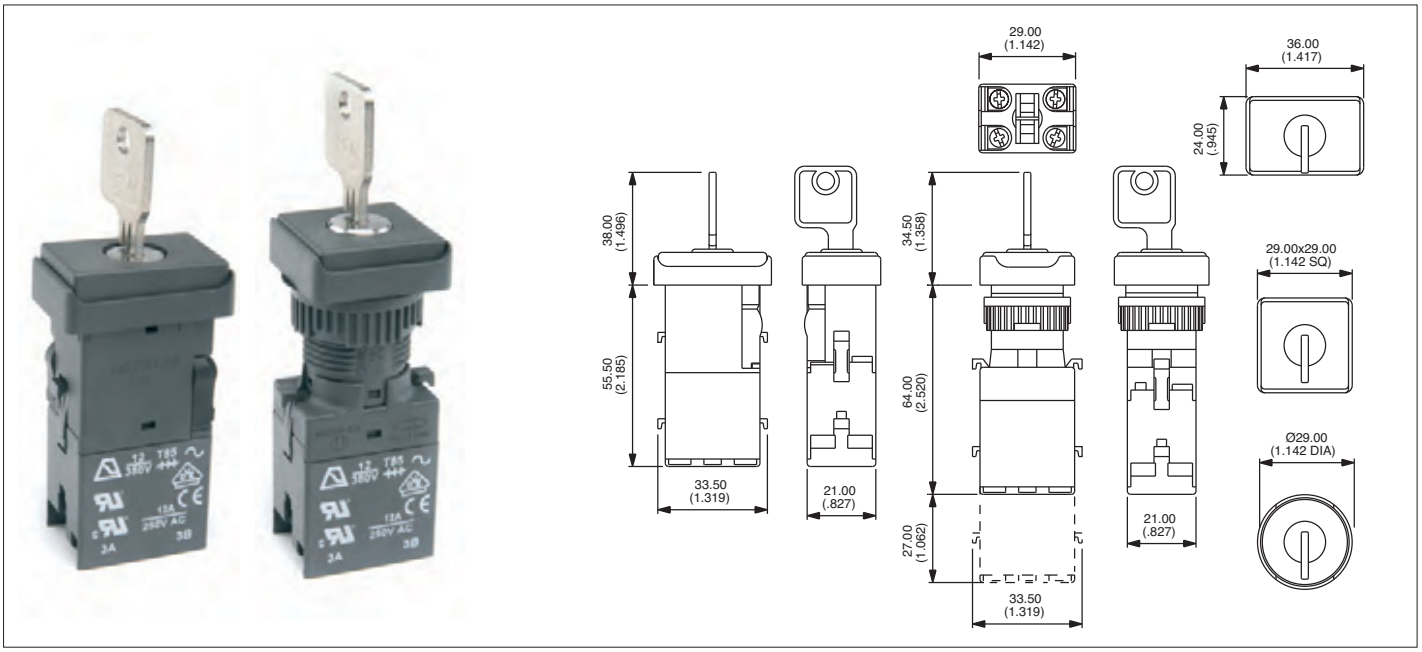

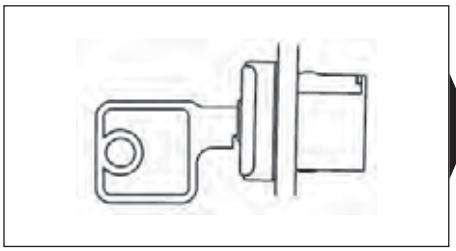

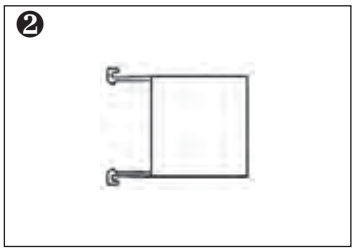

Operator

Bezel	Description	Part No	Key removable in positions
▭	2 pos. maintained	**A028120•**	A-B
▭	2 pos. momentary	**A028119•**	A
▭	3 pos. maintained	**A028105**	A-B-C
▭	3 pos. momentary	**A028106**	A
▭	3 pos. mainL, momR	**A028107**	A-B
▭	3 pos. momL, mainR	**A028108**	A-C
□	2 pos. maintained	**A028220•**	A-B
□	2 pos. momentary	**A028219•**	A
□	3 pos. maintained	**A028205**	A-B-C
□	3 pos. momentary	**A028206**	A
□	3 pos. mainL, momR	**A028207**	A-B
□	3 pos. momL, mainR	**A028208**	A-C
○	2 pos. maintained	**A028320•**	A-B
○	2 pos. momentary	**A028319•**	A
○	3 pos. maintained	**A028305**	A-B-C
○	3 pos. momentary	**A028306**	A
○	3 pos. mainL, momR	**A028307**	A-B
○	3 pos. momL, mainR	**A028308**	A-C

OPTION
To specify **flush mounting (Ø 30 mm) option**, add "FM" to the end of the part number (for round operators only). Example : A028320FM.

Bezel: ▭ rectangular, □ square, ○ round,

Switch block

Contacts	Part No
1 N.O.	**A02501**
1 N.C.	**A02502**
2 N.O.	**A02503**
2 N.C.	**A02504**
1 N.O./1 N.C.	**A02505**

Second switch block

Contacts	Part No
1 N.O.	**A02506**
1 N.C.	**A02507**
2 N.O.	**A02508**
2 N.C.	**A02509**
1 N.O./1 N.C.	**A02510**

To achieve 3 or 4 pole switching, add second switch block, from above table

Key positions

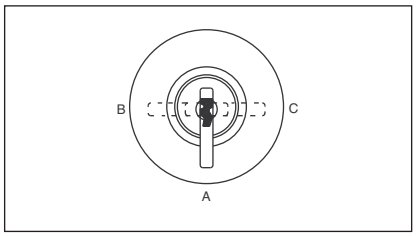

• **Key Rotation - 2 position switches**

The model numbers shown are for switches with clockwise key rotation.
For anticlockwise rotation, replace:

20 with **01**
19 with **02**

at the end of the model number

• 2 standard keys are supplied.

• 20 key barrel types available.

Non-removable key positions : contact APEM.

G

A02 series

Emergency stop switches

Panel cut-out Ø 22 (.866)

- **Prominent 40 mm (1.575) dia. red mushroom actuator**
- **Highly reliable positive break switch**
- **Push to shut off switch, twist to reset to ON**

An emergency stop switch assembly requires : operator + switch block.
To order, specify with single pole or double pole positive break switch block.

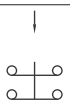

General specifications

- Mechanical life : 6.050 cycles (6 cycles per minute)
- Operating force : 20 N
- Operating temperature : -20°C to +85°C
- Degree of environ. protection (IEC529) : IP65 front of panel, IP40 back of panel
- Switch terminals : M3 screws - wire 2x0.75mm² max.

Electrical specifications

- Current/voltage rating : 2,5A 380VAC AC-15
- Contact gap : > 3 mm (.118)
- Dielectric strength : 2.500V
- Electrical life : 6.050 cycles

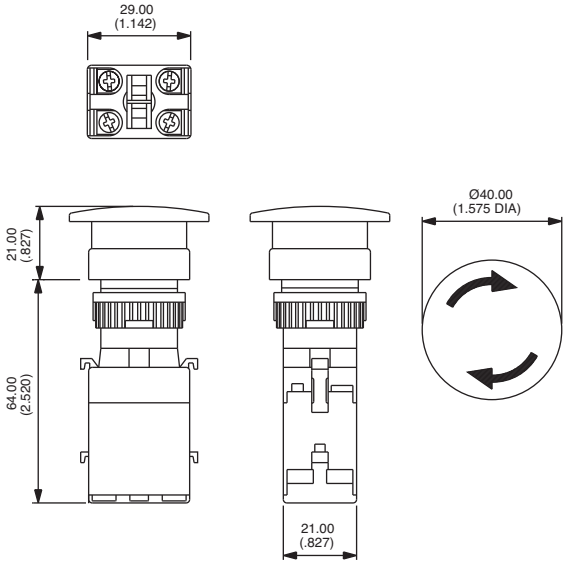

❶

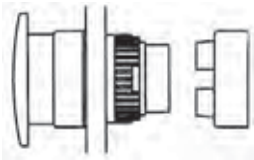

❷

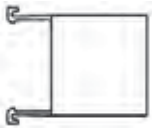

Accessory

90 mm Ø Self Adhesive Label

Description	Part No
Yellow label with text	**A02YL1**
Yellow label	**A02YL2**

Operator

Bezel	Description	Part No
	Emergency stop	**A02ES**

Switch block

No of poles	Part No
Double pole	**A02511**
Single pole	**A02512**

EMERGENCY STOP SWITCH ENCLOSURE

To order the Emergency Stop Switch in the Plastic Enclosure (94 x 94 x 81 mm) with a 2 pole Positive Break Switch Block and Emergency Stop label, use Part number : **A02PE2L.**

G

A02 series

Mushroom head pushbutton switches

Panel cut-out Ø 22 (.866)

- **Prominent 40 mm (1.575) dia. mushroom actuator or optional 26 mm (1.024) actuator**
- **Momentary and maintained functions**
  Momentary function versions are unmarked
  Maintained function versions are twist to release (arrows indicate direction of twist)
- **Various coloured mushroom actuators are available**

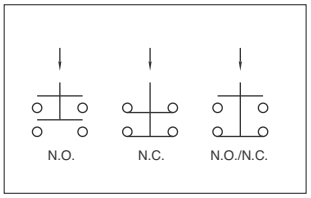

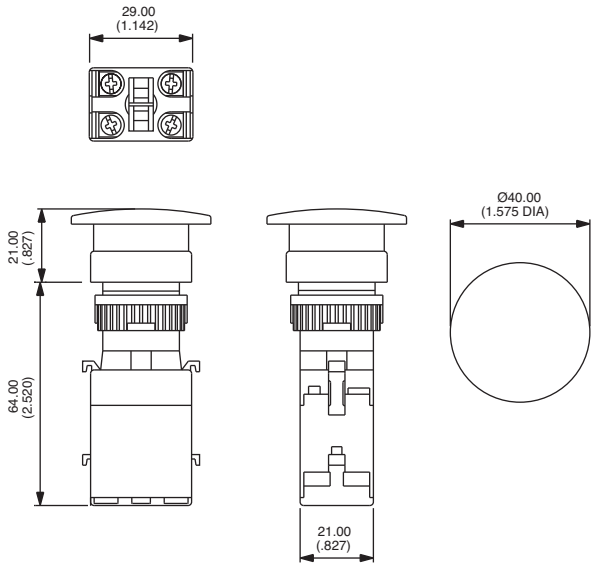

❶

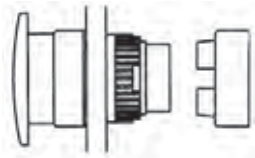

❷

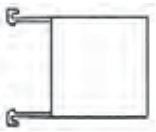

Operator

Bezel	Description	Part No
○	Black momentary	**A02MMA**
○	Red momentary	**A02MMB**
○	Yellow momentary	**A02MMD**
○	Green momentary	**A02MME**
○	Blue momentary	**A02MMF**
○	Black maintained	**A02MXA**
○	Red maintained	**A02MXB**
○	Yellow maintained	**A02MXD**
○	Green maintained	**A02MXE**
○	Blue maintained	**A02MXF**

OPTION
For optional **reduced (Ø 26 mm)** mushroom head operators : contact APEM.

Switch block

Contacts	Part No
1 N.O.	**A02501**
1 N.C.	**A02502**
2 N.O.	**A02503**
2 N.C.	**A02504**
1 N.O./1 N.C.	**A02505**

Second switch block

Contacts	Part No
1 N.O.	**A02506**
1 N.C.	**A02507**
2 N.O.	**A02508**
2 N.C.	**A02509**
1 N.O./1 N.C.	**A02510**

To achieve 3 or 4 pole switching, add second switch block, from above table

Bezel: ○ round

Modular construction / panel mounting

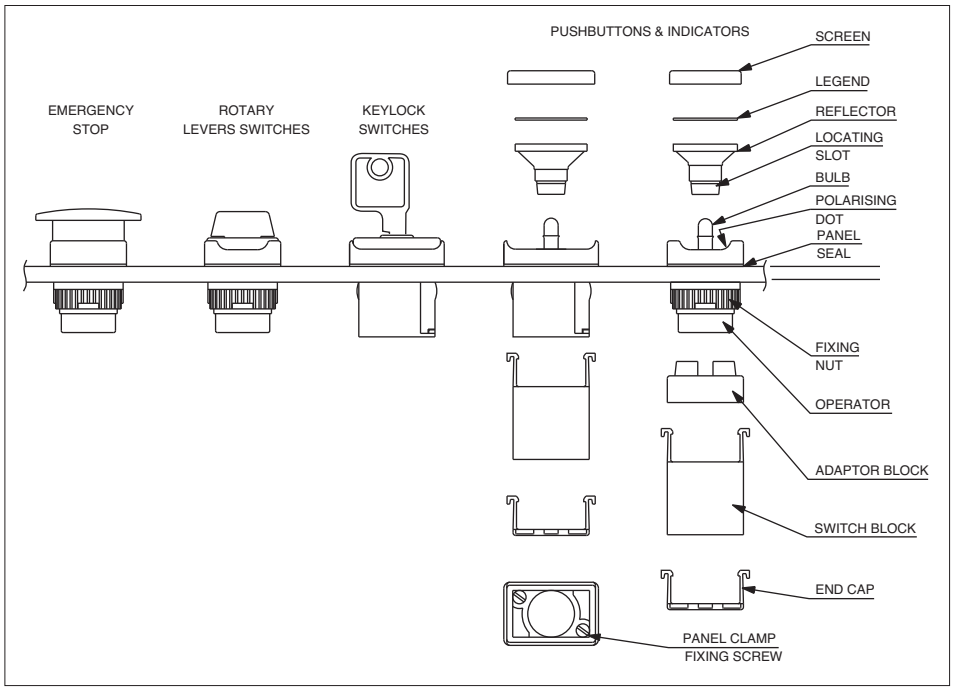

PANEL CUT-OUT

Round & square operators

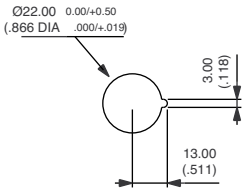

Rectangular operators

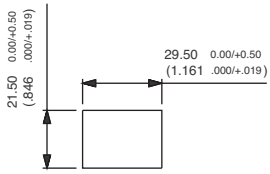

Max. panel thickness : 8 mm (.315)

PANEL MOUNTING ASSEMBLY

- Drill/punch hole in panel as shaped above.
- Assemble front operator through hole and :

a/ *Round & square types* : tighten nut to a maximum torque of 0,8Nm using tool No 30-0001. Snap on adaptor block

b/ *Rectangular types* : tighten two panel fixing screws in front to a maximum torque of 0,06Nm.

- Wire chosen switch block as required and snap onto front operator.
- Snap end cap onto switch block.
- Fit bulb if required using tool No 30-0002.
- Snap screen onto reflector assembly with legend in between if required ans snap into front operator TAKING CARE TO LINE UP THE LOCATING SLOT WITH THE POLARISING DOT, and not to damage the seal.

TO REMOVE BULB

Remove reflector/screen assembly. Use the bulb extractor 30-0002 to remove the bulb.

TO REMOVE SWITCH BLOCK

Lever out latches using small screwdriver taking care not to overbend, and pull off the block from the front operator.

A02 Accessories

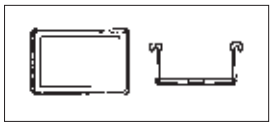

Part No : 14-0005

End cap terminal guard offering unique terminal protection.

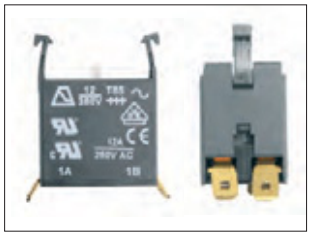

6.35 mm push on tab terminals.
Specify "SP" to the end of the switchblock and operator P/N.
Example : A02503SP.

G

A03 series

Illuminated or non-illuminated pushbutton switches and indicators

Panel cut-out Ø 22 (.866) or 30 (1.181) - Plastic or metal flush mounting bezel

A pushbutton assembly requires :
screen + lamp (if illuminated) + operator + switch block.
To order these elements, select desired model numbers from tables below.
Example : IP65 flush mounting round pushbutton, maintained function, red screen, 12V red LED and single pole switch block = A0314X, A0263B, A0142M1 and A0151BUL.

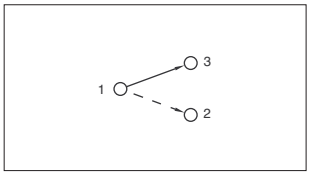

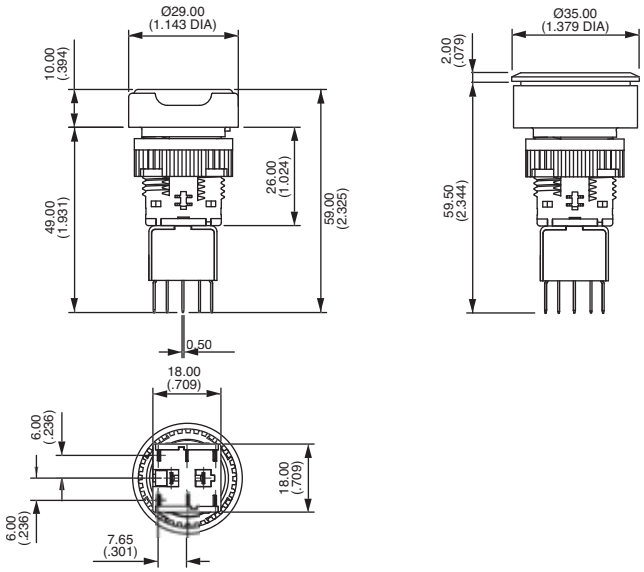

❶

❷

❸

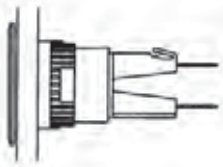

❹

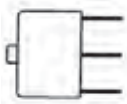

Screen

Bezel	Colour	Part No
○	black	**A0263A**
○	red	**A0263B**
○	amber	**A0263C**
○	yellow	**A0263D**
○	green	**A0263E**
○	blue	**A0263F**
○	clear	**A0263G**
○	white	**A0263J**

Lamp

Lamp	Voltage	Part No
Filament	6.3V	**A0141A**
Filament	14V	**A0141B**
Filament	28V	**A0141C**
Filament	36V	**A0141D**
Filament	48V	**A0141E**
Filament	60V	**A0141F**
Neon	110V	**A0143G**
Neon	220V	**A0143H**
LED	6V red	**A0142L1**
LED	6V green	**A0142L2**
LED	6V amber	**A0142L3**
LED	12V red	**A0142M1**
LED	12V green	**A0142M2**
LED	12V amber	**A0142M3**
LED	12V blue	**A0142M4**
LED	12V white	**A0142M5**
LED	24V red	**A0142N1**
LED	24V green	**A0142N2**
LED	24V amber	**A0142N3**
LED	24V blue	**A0142N4**
LED	24V white	**A0142N5**
LED	48V red	**A0142P1**
LED	48V green	**A0142P2**
LED	48V amber	**A0142P3**

Operator

Bezel	Description	Lamp type	Part No
○	Plastic illum, momentary	Lamp/LED bulb	**A0307Y**
○	Plastic illum, maintained	Lamp/LED bulb	**A0307X**
○	Plastic non-illum, momentary		**A0309Y**
○	Plastic non-illum, maintained		**A0309X**
○	Metal illum, momentary	Lamp/LED bulb	**A0310Y**
○	Metal illum, maintained	Lamp/LED bulb	**A0310X**
○	Metal non-illum, momentary		**A0312Y**
○	Metal non-illum, maintained		**A0312X**
○	F/mount illum, momentary	Lamp/LED bulb	**A0314Y**
	F/mount illum, maintained	Lamp/LED bulb	**A0314X**
○	F/mount non-illum, momentary		**A0315Y**
○	F/mount non-illum, maintained		**A0315X**
○	Plastic indicator		**A0375**
○	Metal indicator		**A0377**
○	F/mount indicator		**A03791**

Switch block

No of poles	Part No
Single pole	**A0151B**
Double pole	**A0152B**
Three pole	**A0155B**
Four pole	**A0153B**

UNSEALED SWITCHES (IP40) :
add "01" to end of **operator** model number.

SCREEN ENGRAVING / INSERTABLE LEGENDS : contact APEM.

Bezel: ○ round. 'Illum' - illuminated, 'Non-illum' - non illuminated

ES series

Heavy-duty emergency stop

Distinctive features and specifications

- ❑ **2 and 3-pole configurations**
- ❑ **Rugged version : 100.000 cycle mechanical life**
- ❑ **Locked/unlocked status indicator**
- ❑ **Lower behind-panel depth**
- ❑ **Sealed to IP65, IP67 and IP69K**
- ❑ **Complies with EN 60947-5-1**

ELECTRICAL SPECIFICATIONS

- Electrical function : push-pull ON-ON
- Current/voltage rating : 1A 24VDC DC-14
- Electrical life : 6.050 cycles
- Contact resistance : 10 mΩ max.
- Insulation resistance : 1.000 MΩ min. at 500VDC
- Dielectric stength : 1.000 Vrms 50 Hz min. between terminals
  2.000 Vrms 50 Hz min. between poles and between terminals and frame

ENVIRONMENTAL SPECIFICATIONS

- Sealing : IP65, IP67 and IP69K according to IEC 60529 and DIN 40050
- Salt spray : 96 hours according to IEC 68-2-11
- Vibrations : 10-500 Hz - 10 g according to IEC 68-2-6
- Shock resistance : 50 g according to IEC 68-2-27
- Robustness (axial) : IK10
- Operating temperature : -40°C to +85°C
- According to EN 60947-5-1

PANEL CUT-OUT

① O-ring
② Hole

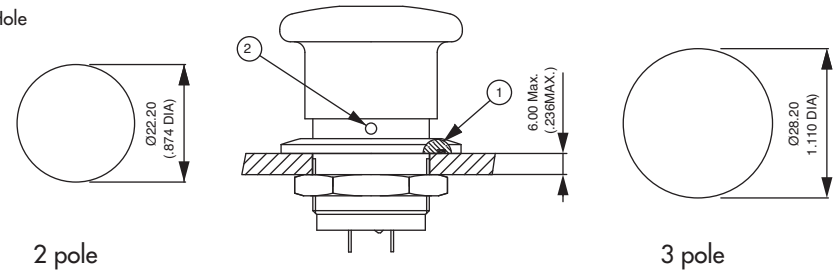

2 pole

3 pole

GENERAL SPECIFICATIONS

- Panel thickness : 6 mm (.236) max.
- Low level or mechanical life :
  100.000 cycles
- Travel to lock : 2,20 mm ± 0,3 mm
- Total travel : 4,20 mm ± 0,3 mm
- Torque : 5 Nm min. - 14 Nm max.
  applied to nut
- Operating force :
  2 pole models : Push : 30N ± 7N
  pull : 25N ± 5N
  3 pole models : Push : 45N ± 7N
  pull : 25N ± 5N

MATERIALS

- Case : diallylphthalate (DAP)
- Actuator : aluminium, red anodised
- Bushing : aluminium, yellow
  anodised
- Contacts : silver, gold plated
- Terminal seal : epoxy

Note : **the hole in the bushing** is designed for insertion of a Ø 2 mm metal rod helping to fasten the switch on the panel.

G

The company reserves the right to change specifications without notice.

ES series

Heavy-duty emergency stop

Overview

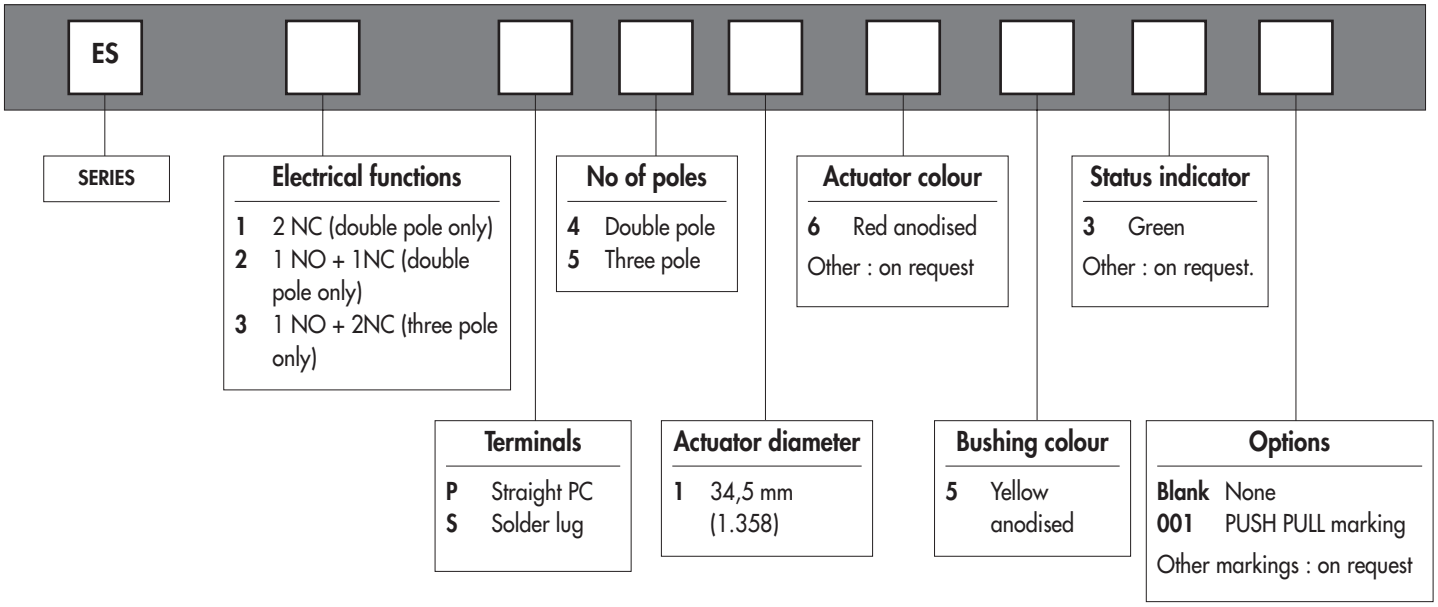

Dimensions : first dimensions are in mm while inches are shown as bracketed numbers.

NOTICE : please note that not all combinations of above numbers are available.
Refer to the following pages for further information.

Mounting accessories : Standard hardware supplied : 1 hex nut 25 (.984) or 32 (1.260) across flats and 1 O-ring

Packaging unit : 10 pieces

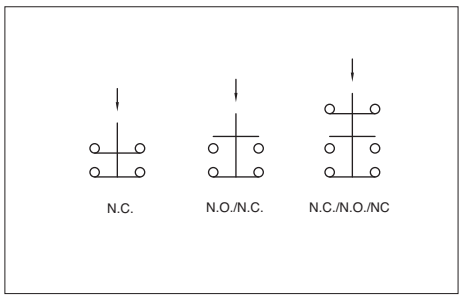

Straight PC terminal

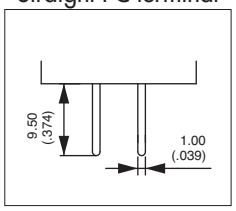

MODEL STRUCTURE

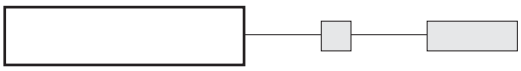

Shown with solder lug terminals

Double pole - 2 N.C. contacts

Solder lug terminals
ES1S41653

Straight PC terminals
ES1P41653

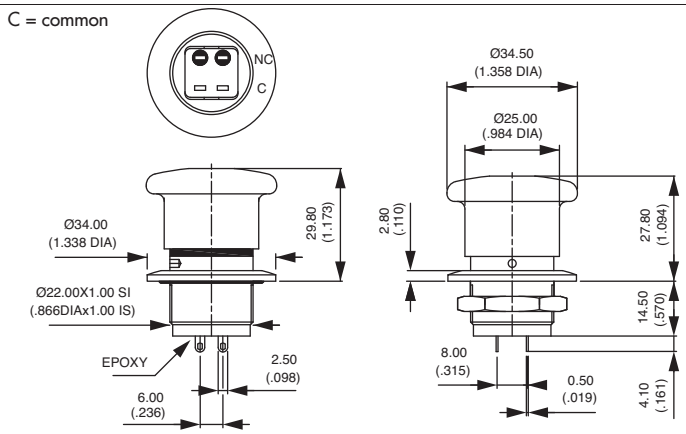

Double pole - 1 N.O. and 1 N.C. contacts

Solder lug terminals
ES2S41653

Straight PC terminals
ES2P41653

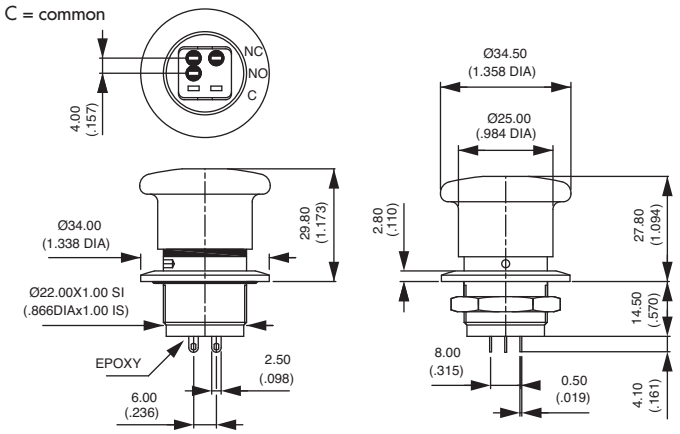

Three pole - 1 N.O. and 2 N.C. contacts

Solder lug terminals
ES3S51653

Straight PC terminals
ES3P51653

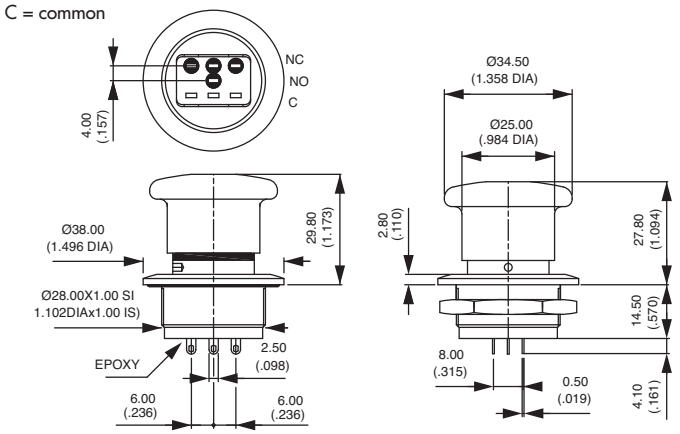

G

STATUS INDICATOR COLOUR

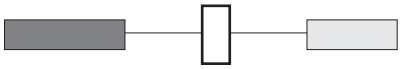

3 Green

Other : on request.

OPTIONS

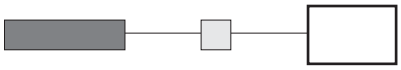

Blank None
001 PUSH PULL marking

Other markings : on request

Sealing boots

Section H

Sealing boots

- ❑ **Prevent dust, sand and water from getting into switches.**
- ❑ **On toggle versions, also prevent ice from blocking lever action**
- ❑ **Compatible with frontal sealing options (K and X408).**
- ❑ **Available in a wide range of colours.**
- ❑ **When necessary, a sealing ring or washer is supplied with the boot.**

MATERIALS AND SPECIFICATIONS

- Boot material : neoprene or silicone (see comparative advantages below)
- Nut material : brass, nickel plated or black
- Operating temperature :
  - neoprene boots : -20°C to +50°C
  - silicone boots : -40°C to + 85°C

++ : excellent, + : good, - : poor

COMPARATIVE ADVANTAGES	TEMPERATURE RANGE		ELASTICITY	MECHANICAL RESISTANCE
	LOW	HIGH		
Silicone	++	++	++	-
Neoprene	-	+	-	++

DIFFERENT TYPES OF BOOTS

* Colour options available

Full-toggle (standard) *

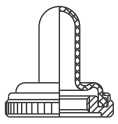

Half-toggle *

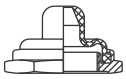

Two-part (no metal parts accessible) *

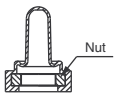

For double sealing

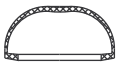

EXAMPLES OF MOUNTING

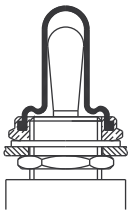

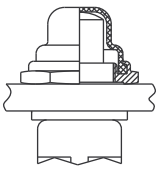

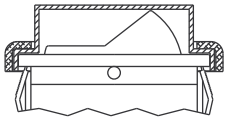

The company reserves the right to change specifications without notice.

Sealing boots

For toggle switches

For bushing Ø 6 x 0.75 (.236 x 0.75) - 5500 series

NUT	FULL-TOGGLE SILICONE BOOTS			
	Black	Red	Green	White
Knurled Nickel plated	**N32161005** (U1341)	**N32162005** (U1341-6)	**N3216V005** (U1341-3)	**N3216B005** (U1341-7)
Knurled Black	**N32161002** (U1343)	**N32162002** (U1343-6)	**N3216V002** (U1343-3)	**N3216B002** (U1343-7)
Hex Nickel plated	**N32121005** (U1302)	**N32122005** (U1302-6)	**N3212V005** (U1302-3)	**N3212B005** (U1302-7)
Hex Black	**N32121002** (U1304)	**N32122002** (U1304-6)	**N3212V002** (U1304-3)	**N3212B002** (U1304-7)

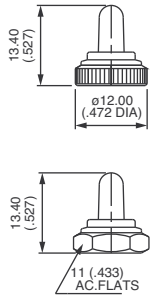

For bushing Ø 6,35-40NS (1/4-40UNS) - 5000 and 11000 series

NUT	FULL-TOGGLE SILICONE BOOTS			
	Black	Red	Green	White
Knurled Nickel plated	**N33161005** (U1331)	**N33162005** (U1331-6)	**N3316V005** (U1331-3)	**N3316B005** (U1331-7)
Knurled Black	**N33161002** (U1333)	**N33162002** (U1333-6)	**N3316V002** (U1333-3)	**N3316B002** (U1333-7)
Hex Nickel plated	**N33121005** (U1229)	**N33122005** (U1229-6)	**N3312V005** (U1229-3)	**N3312B005** (U1229-7)
Hex Black	**N33121002** (U1231)	**N33122002** (U1231-6)	**N3312V002** (U1231-3)	**N3312B002** (U1231-7)

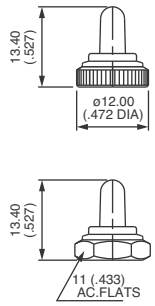

For bushing Ø 6,35-40NS (1/4-40UNS) - 5000 and 11000 series

BOOTS SUPPLIED AS 2 SEPARATE PARTS			
NEOPRENE	SILICONE		
Black	Red	Green	White
N33136119 (U5149)	**N33137119** (U5149-6)	**N3313V119** (U5149-3)	**N3313B119** (U5149-7)

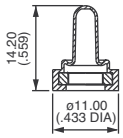

Once the boot is mounted onto the panel, no switch metal part is accessible any more.

For bushing Ø 10 x 0.75 (.393 x 0.75) - 10600 series

KNURLED NUT	FULL-TOGGLE SILICONE BOOTS			
	Black	Red	Green	White
Nickel plated	**N34151005** (U1612)	**N34152005** (U1612-6)	**N3415V005** (U1612-3)	**N3415B005** (U1612-7)
Black	**N34151002** (U1614)	**N34152002** (U1614-6)	**N3415V002** (U1614-3)	**N3415B002** (U1614-7)

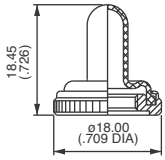

For bushing Ø 11,9-32 NS (15/32-32NS) - 12000, 5000M, 3500 and 6000 series

HEX NUT	FULL-TOGGLE SILICONE BOOTS			
	Black	Red	Green	White
Nickel plated	**N35111005** (U1031)	**N35112005** (U1031-6)	**N3511V005** (U1031-3)	**N3511B005** (U1031-7)
Black	**N35111002** (U1024)	**N35112002** (U1024-6)	**N3511V002** (U1024-3)	-

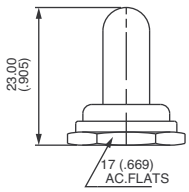

H

Sealing boots

For toggle switches

For bushing Ø 11,9-32 NS (15/32-32NS) - 12000, 3500 and 6000 series

HEX NUT	HALF-TOGGLE SILICONE BOOTS			
	Black	Red	Green	White
Nickel plated	**N35111015** (U1600)	**N35112015** (U1600-6)	**N3511V015** (U1600-3)	**N3511B015** (U1600-7)
Black	**N35111012** (U1602)	**N35112012** (U1602-6)	**N3511V012** (U1602-3)	-

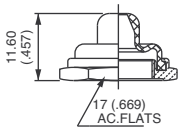

For bushing Ø12 x 0.75 SI (.472x.075 IS) - 12000, 3500, 3600 and 600 series

FULL-TOGGLE BLACK NEOPRENE BOOT
N36346009 (U2252)

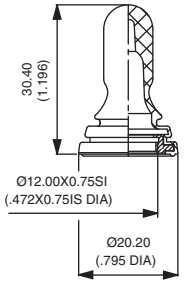

For bushing Ø12 x 0.75 SI (.472x.075 IS) - 600 series with -5 long lever

FULL-TOGGLE BLACK NEOPRENE BOOT
N36346209 (U2197)

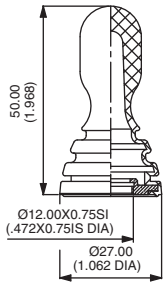

For bushing Ø12 x 0.75 SI (.472x.075 IS) - 4450, 4650 and 1600 series

HEX NUT	FULL-TOGGLE BLACK NEOPRENE BOOTS
Nickel plated	**N36116045** (U09)
Black	**N36116042** (U223)

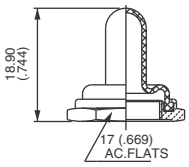

For bushing Ø 12 x 0.75 SI (.472x.075 IS) - 600H, 660, 1000, 1500 and 3600

HEX NUT	FULL-TOGGLE SILICONE BOOTS			
	Black	Red	Green	White
Nickel plated	**N36111005** (U1565)	**N36112005** (U1565-6)	**N3611V005** (U1565-3)	**N3611B005** (U1565-7)
Black	**N36111002** (U1567)	**N36112002** (U1567-6)	**N3611V002** (U1567-3)	-
	FULL-TOGGLE BLACK NEOPRENE BOOTS			
Nickel plated	**N36116005** (U851)			
Black	**N36116002** (U853)			

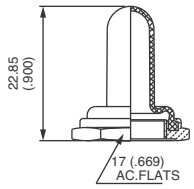

H

Sealing boots

For toggle switches or pushbutton switches

For bushing Ø 12 x 0.75 SI (.472x.075 IS) - 600H, 660, 1000 and 3600 series

HEX NUT	HALF-TOGGLE SILICONE BOOTS			
	Black	Red	Green	White
Nickel plated	**N36111015** (U1151)	**N36112015** (U1151-6)	**N3611V015** (U1151-3)	**N3611B015** (U1151-7)
Black	**N36111012** (U1153)	**N36112012** (U1153-6)	**N3611V012** (U1153-3)	-
	HALF-TOGGLE BLACK NEOPRENE BOOTS			
Nickel plated	**N36116015** (U598)			
Black	**N36116012** (U600)			

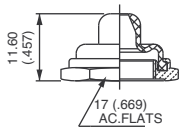

For bushing Ø 4 x 0.70 (.157 x 0.70) - 9500 series

HEX NUT	PUSHBUTTON SILICONE BOOTS			
	Black	Red	Green	White
Nickel plated	**N31221005** (U1829)	**N31222005** (U1829-6)	**N3122V005** (U1829-3(	**N3122B005** (U1829-7)
Black	**N31221002** (U1831)	**N31222002** (U1831-6)	**N3122V002** (U1831-3)	**N3122B002** (U1831-7)

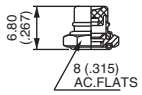

For bushing Ø 6,35-40NS (1/4-40UNS) - 18000, 9000 and 13000 series

NUT	PUSHBUTTON SILICONE BOOTS			
	Black	Red	Green	White
Knurled Nickel plated	**N33261005** (U1401)	**N33262005** (U1401-6)	**N3326V005** (U1401-3)	**N3326B005** (U1401-7)
Knurled Black	**N33261002** (U1403)	**N33262002** (U1403-6)	**N3326V002** (U1403-3)	**N3326B002** (U1403-7)
Hex Nickel plated	**N33221005** (U1318)	**N33222005** (U1318-6)	**N3322V005** (U1318-3)	**N3322B005** (U1318-7)
Hex Black	**N33221002** (U1320)	**N33222002** (U1320-6)	**N3322V002** (U1320-3)	**N3322B002** (U1320-7)

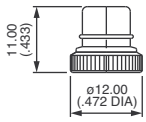

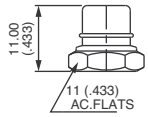

For bushing Ø 6,35-40NS (1/4-40 UNS) - 8000 series

KNURLED NUT	PUSHBUTTON SILICONE BOOTS			
	Black	Red	Green	White
Nickel plated	**N33261125** (U4301)	**N33262125** (U4301-6)	**N3326V125** (U4301-3)	**N3326B125** **(U4301-7)**

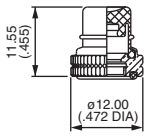

For bushing Ø 10 x 0.75 (.393 x 0.75) - 10400 series

KNURLED NUT	PUSHBUTTON SILICONE BOOTS			
	Black	Red	Green	White
Nickel plated	**N34251005** (U1624)	**N34252005** (U1624-6)	**N3425V005** (U1624-3)	**N3425B005** (U1624-7)
Black	**N34251002** (U1626)	**N34252002** (U1626-6)	**N3425V002** (U1626-3)	**N3425B002** (U1626-7)

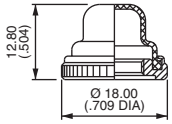

H

Sealing boots

For pushbutton switches

For bushing Ø 11,9-32 NS (15/32-32UNS) - 13000X778, 13000X768 and 8000-6X934 series

HEX NUT	PUSHBUTTON SILICONE BOOTS			
	Black	Red	Green	White
Nickel plated	**N35211005** (U589)	**N35212005** (U589-6)	**N3521V005** (U589-3)	**N3521B005** (U589-7)
Black	**N35211002** (U590)	**N35212002** (U590-6)	**N3521V002** (U590-3)	-

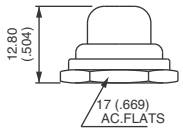

For long plunger (-9) care should be taken over the panel thickness.

For bushing Ø 12 x 0.75 SI (.472x.075 IS) - 1200, 4700 and 4800 series

HEX NUT	PUSHBUTTON SILICONE BOOTS			
	Black	Red	Green	White
Nickel plated	**N36211005** (U1654)	**N36212005** (U1654-6)	**N3621V005** (U1654-3)	**N3621B005** (U1654-7)
Black	**N36211002** (U1656)	**N36212002** (U1656-6)	**N3621V002** (U1656-3)	-
	PUSHBUTTON BLACK NEOPRENE BOOTS			
Nickel plated	**N36216005** (U31)			
Black	**N36216002** (U225)			
Chrome plated	**N36216001** (U224)			

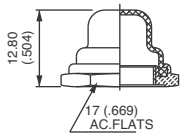

For double sealing on IC, IH, IL, IM, IP and IB-IS series

SILICONE BOOT	
Transparent	**U5125**
Blue	**U5125-1**
Black	**U5125-2**
Red	**U5125-6**

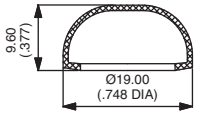

Operating temperature : -40°C to +85°C
The flat seal or O-Ring supplied with the switch should not be used with this boot.

For double sealing on IA series

SILICONE BOOT	
Black	**U6602**
Yellow	**U6605**
Red	**U6606**

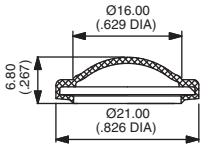

For IZ series

HEX NUT	TRANSPARENT SILICONE BOOT
Nickel plated	**N3822D005**
Black	**N3822D002**

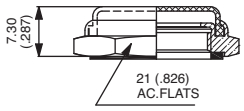

Panel thickness :
For models IZP and IZN, panel thickness should be 4 mm (.157).
No restriction for IZM models.

Sealing boots

For pushbutton switches or rocker switches

For AV series (models with Ø 19 mm bushing)

SILICONE BOOT	
Black	U2187-2
Green	U2187-3
Grey	U2187-4
Yellow	U2187-5
Red	U2187-6
White	U2187-7
Transparent	U2187-8

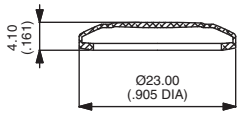

For LPI series

SILICONE BOOT	
Black	U3082
Transparent	U3088

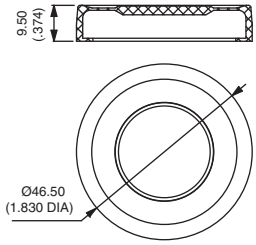

For 2600 series

TRANSPARENT SILICONE BOOT
U2150

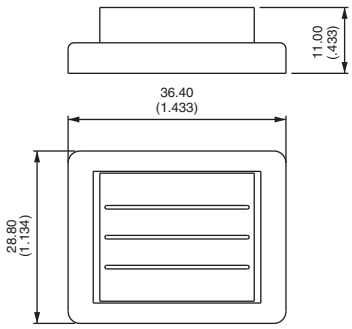

For FM series

TRANSPARENT PVC BOOT
U5720

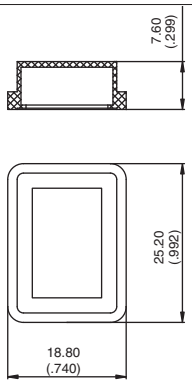

For KG series

BLACK SILICONE BOOT
U3084

Also available with pad-printed symbols : on request.

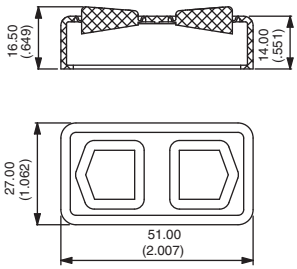

H

Indicators / Accessories Hardware

Section I

Q series

Panel mount LED indicators

With the recent introduction of new versions, APEM now offers the broadest range of LED indicators in the market:

- 7 diameters: 6, 8, 12, 14, 16, 19 and 22 mm,
- 3 bezel styles: prominent, recessed and flush
- 3 bezel finishes: bright chrome, black chrome and satin grey
- 6 standard power supply voltages: 6VDC, 12VDC, 24VDC, 28VDC, 110VAC and 220VAC
- 5 LED colours: red, green, yellow, blue and white
- Optional bicolour or tricolour LED's
- 3 output styles: solder lug/faston terminals, pins or wires

Options

- High brightness LED's (sunlight readable)
- Panel sealing to IP67
- Custom engraving on flush bezel versions
- Plastic bezels on 16 and 22 mm

Main specifications

- Typical viewing angle: 70° to 100° depending on model
- Long life expectancy: 100.000 hours
- Operating temperature range: -40°C to + 85°C

To benefit by the numerous advantages of LED technology (long life, low electrical consumption, low thermal dissipation, good impact resistance), APEM also offers a range of based LED lamps intended for replacement of less efficient filament lamps.

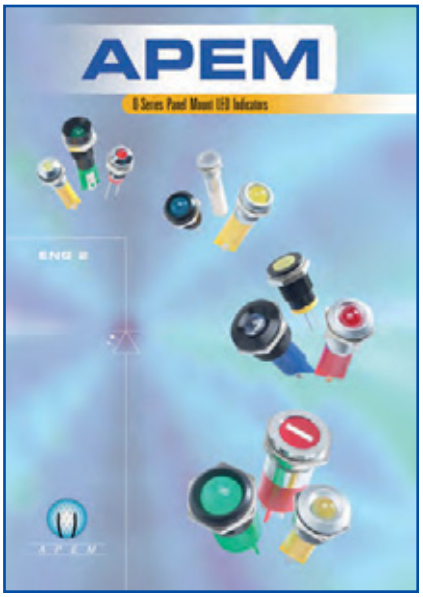

36-page catalogue on line and on request - www.apem.com

The company reserves the right to change specifications without notice.

SPECIFICATIONS

- Dielectric strength : 15A type : 3.000 Vrms 50 Hz min. between shaft and panel
  25A type : 4.000 Vrms 50 Hz min. between shaft and panel
- Short overload (< 2mn) : 50 % with cable lug
- Terminal connection by : - plug Ø 4 mm (.157), solder lugs, wire lead
- Operating temperature : -40°C to +70°C
- Packaging unit : 100 pieces or multiple per type and colour.

MATERIALS

- Shaft : brass, nickel plated
- Insulated nut : ABS molding over brass
- Other insulated parts : phenolic resin or melamine

Dimensions in mm and inches.

Insulated terminal posts 15A

B1	Black
B11	Red
B12	Green
B13	Blue
B14	White
B15	Yellow
B16	Green / Yellow
B19	Orange

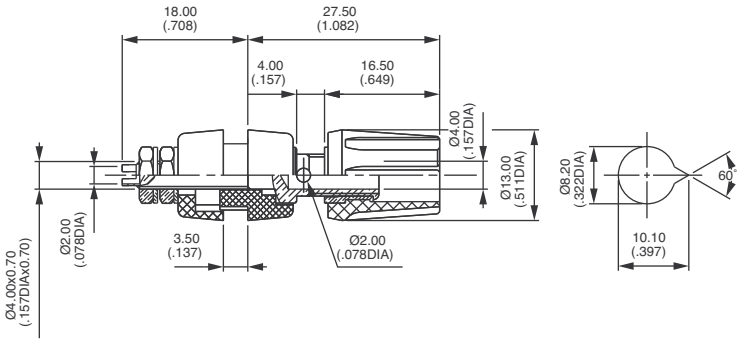

Non-insulated terminal posts 15A

B2	Black
B21	Red
B22	Green
B23	Blue
B24	White
B25	Yellow
B26	Green / Yellow
B29	Orange

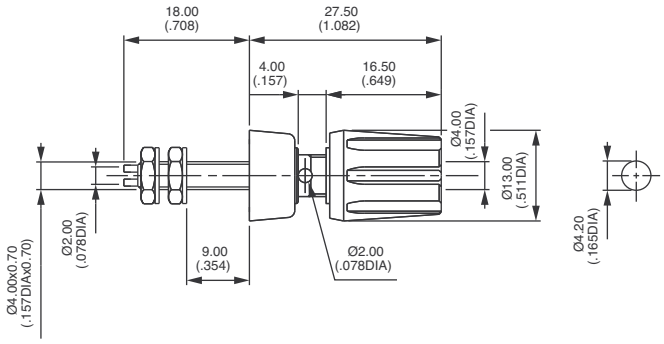

Insulated terminal posts 25A

B3	Black
B31	Red
B32	Green
B33	Blue
B34	White
B35	Yellow
B36	Green / Yellow
B39	Orange

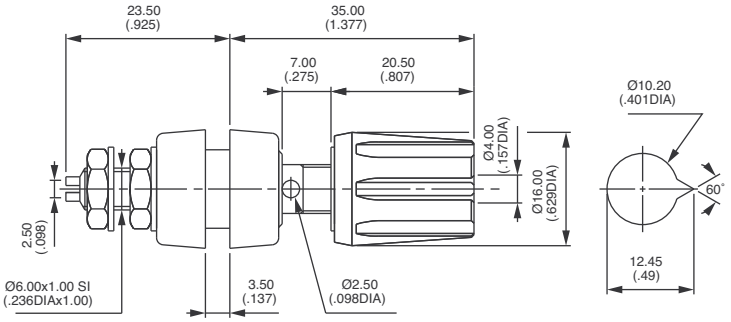

Non-insulated terminal posts 25A

B4	Black
B41	Red
B42	Green
B43	Blue
B44	White
B45	Yellow
B46	Green / Yellow
B49	Orange

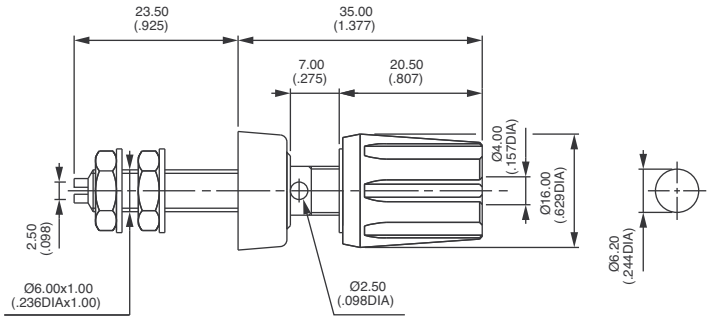

The company reserves the right to change specifications without notice.

Switch guards

For switch series 12000 - 3500 - 600H - 6000

With standard bushing

Switch guards prevent accidental lever operation.
When the guard is raised, the lever can be operated freely.
When the guard is fully depressed, the lever is reset/locked in a stable position.
They are designed for use on switches with Ø 11,9 (.468) or Ø 12 (.472) threaded bushing and lever length 17,5 (.688) outside bushing.

Note : For correct switch operation, the switch guard should be adjusted properly by means of 2 nuts.

MATERIALS

- Support plate : matt black steel
- Cap : thermoset or thermoplastic (20PN, 200PN, 300PN)

MODEL STRUCTURE

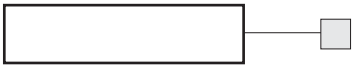

Series 20 - for 2-position switches

- Lever returned then locked in down position (OFF)

Model No	Colour
22	Grey
23	White
24	Orange
25	Black
26	Red
27	Green
28	Yellow
29	Blue
25/28	Black/yellow striped

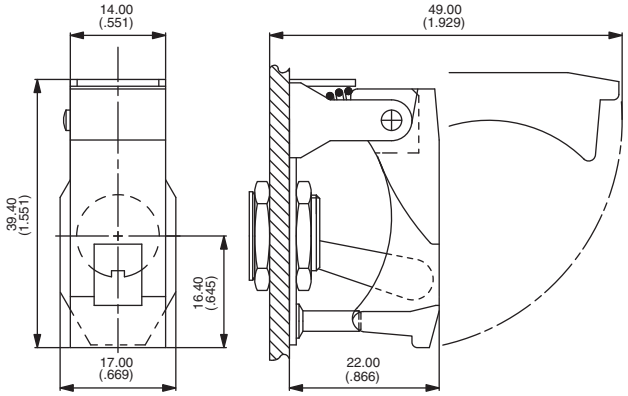

Series 20PN - for 2-position switches

- Lever returned then locked in down position (OFF)

Model No	Colour
22PN	Grey
23PN	White
24PN	Orange
25PN	Black
26PN	Red
27PN	Green
28PN	Yellow
29PN	Blue

On this model, holes for wiring a seal are standard.

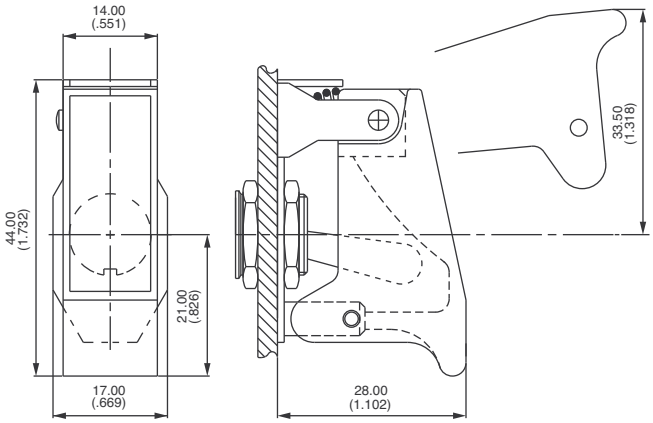

Series 30 - for 3-position switches

- Lever returned then locked in upper position

Model No	Colour
32	Grey
33	White
34	Orange
35	Black
36	Red
37	Green
38	Yellow
39	Blue
35/38	Black/yellow striped

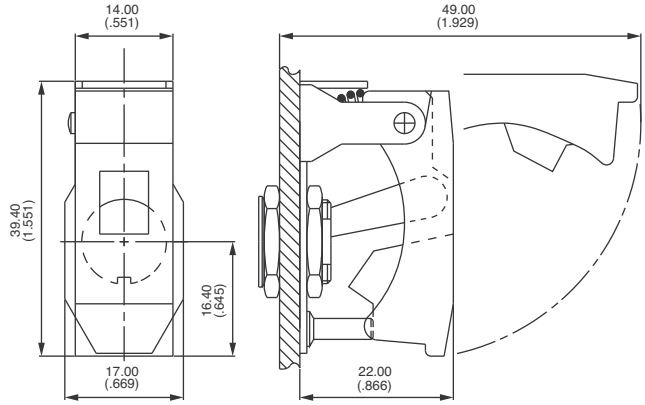

The company reserves the right to change specifications without notice.

Switch guards

For switch series 12000 - 3500 - 600H - 6000

With standard bushing

Series 40 - for 2-position switches

- Lever returned then locked in upper position

Model No	Colour
42	Grey
43	White
44	Orange
45	Black
46	Red
47	Green
48	Yellow
49	Blue
45/48	Black/yellow striped

Model **140** (with smaller aperture) recommended for the 12000 series.

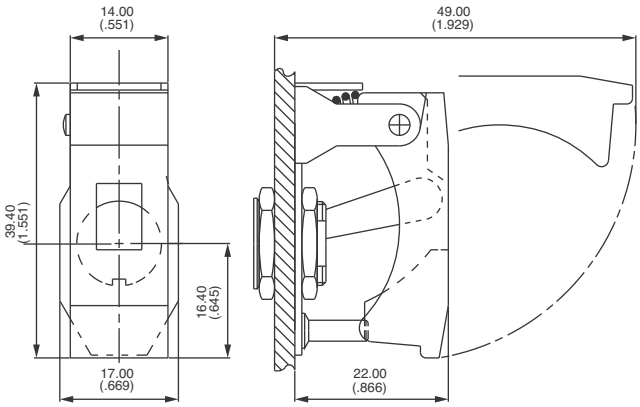

Series 80 - for 3-position switches

- Lever returned then locked in center position

Model No	Colour
82	Grey
83	White
84	Orange
85	Black
86	Red
87	Green
88	Yellow
89	Blue

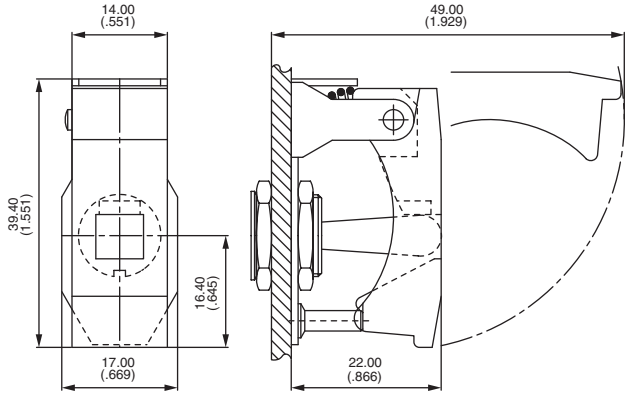

Series 200 - for 2-position switches

- Lever returned then locked either in lower or in upper position

Model No	Colour
202	Grey
203	White
204	Orange
205	Black
206	Red
207	Green
208	Yellow
209	Blue

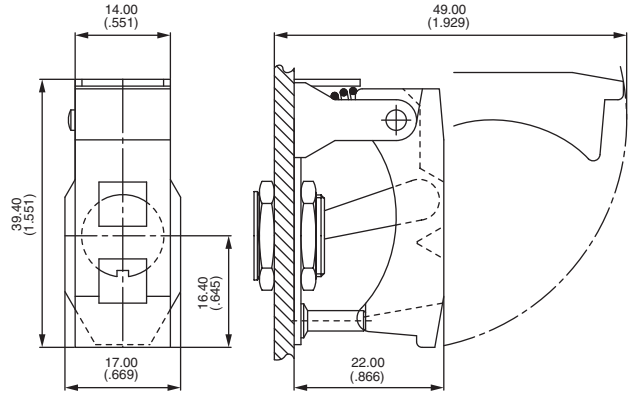

Series 200PN - for 2 or 3-position switches - action preventer

- Lever not locked, but protected in the position where left by the user

Model No	Colour
202PN	Grey
203PN	White
204PN	Orange
205PN	Black
206PN	Red
207PN	Green
208PN	Yellow
209PN	Blue

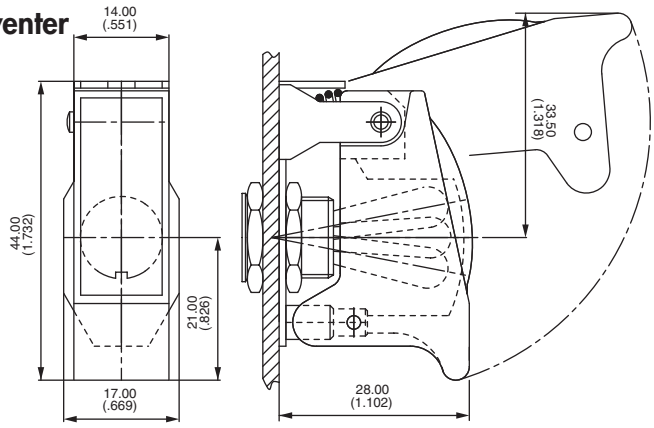

Switch guards

For switch series 12000 - 3500 - 600H - 6000

With flatted bushing

Series 50 - for 2-position switches

- Lever returned then locked in down position (OFF)

Model No	Colour
52	Grey
53	White
54	Orange
55	Black
56	Red
57	Green
58	Yellow
59	Blue
55/58	Black/yellow striped

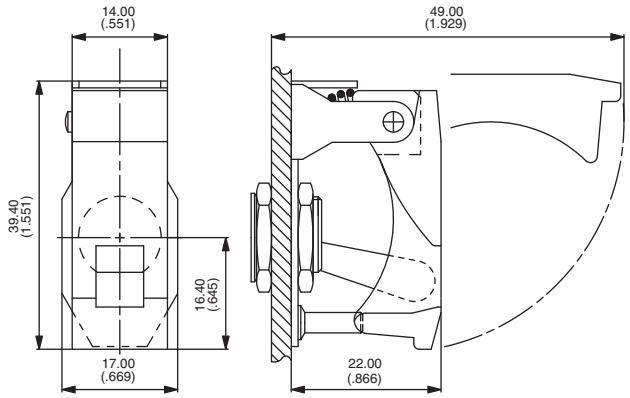

Series 60 - for 3-position switches

- Lever returned then locked in upper position

Model No	Colour
62	Grey
63	White
64	Orange
65	Black
66	Red
67	Green
68	Yellow
69	Blue
65/68	Black/yellow striped

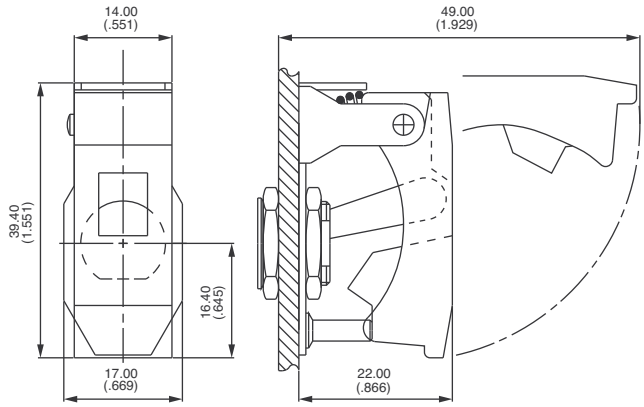

Series 70 - for 2-position switches

- Lever returned then locked in upper position

Model No	Colour
72	Grey
73	White
74	Orange
75	Black
76	Red
77	Green
78	Yellow
79	Blue
75/78	Black/yellow striped

Model **170** (with smaller aperture) recommended for the 12000 series.

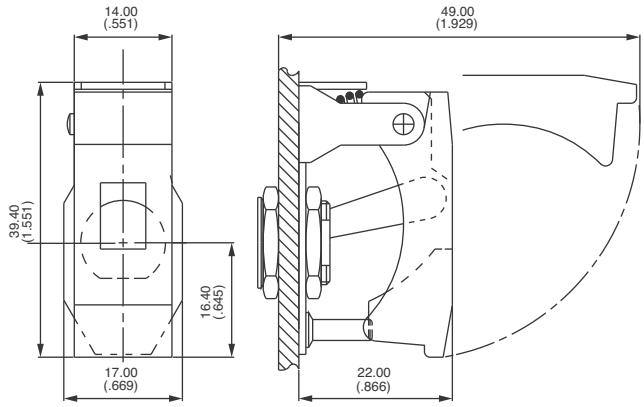

Series 100 - for 3-position switches

- Lever returned then locked in center position

Model No	Colour
102	Grey
103	White
104	Orange
105	Black
106	Red
107	Green
108	Yellow
109	Blue

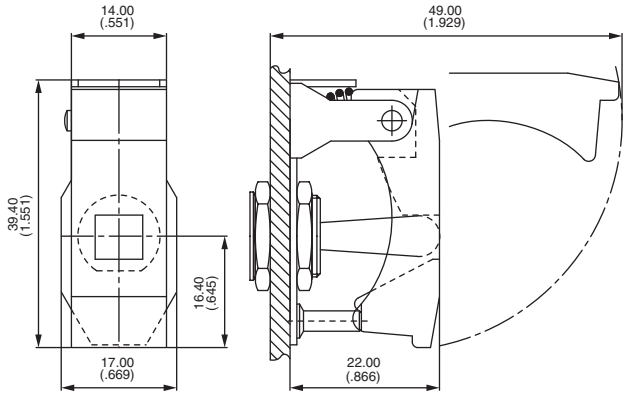

Switch guards

For switch series 12000 - 3500 - 600H - 6000

With flatted bushing

Series 300PN - for 2 or 3-position switches

- Lever not locked, but protected in the position where left by the user.

Model No	Colour
302PN	Grey
303PN	White
304PN	Orange
305PN	Black
306PN	Red
307PN	Green
308PN	Yellow
309PN	Blue

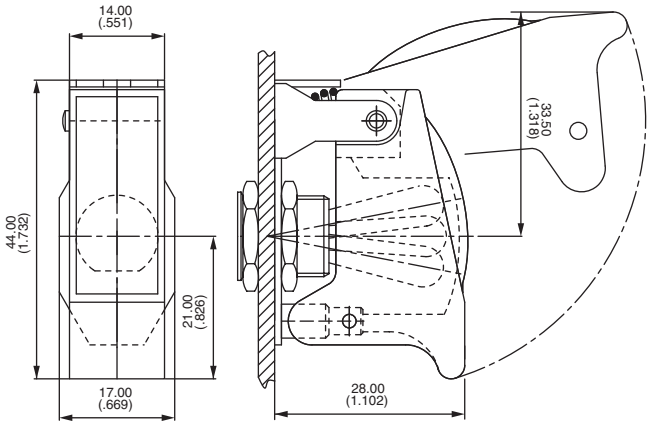

Series 500 - for 2-position switches

- Lever returned then locked either in lower or in upper position

Model No	Colour
502	Grey
503	White
504	Orange
505	Black
506	Red
507	Green
508	Yellow
509	Blue

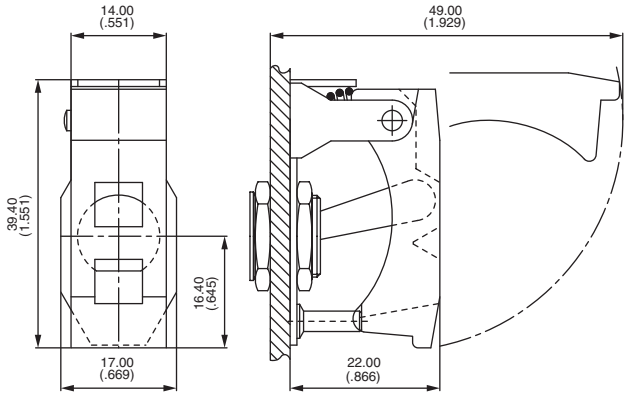

OPTIONS

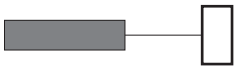

P Holes for wiring a seal

Cap engraving available : consult factory.

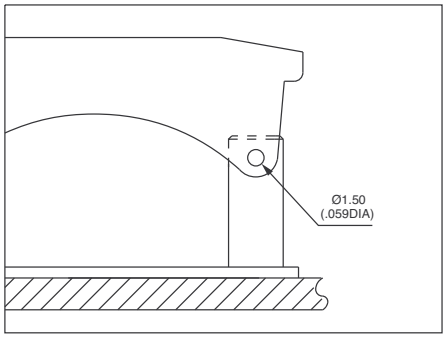

Switch guards

For switch series 3500 - 600H - 6000

With standard or flatted bushing

Series 90

- Lever locked in center position

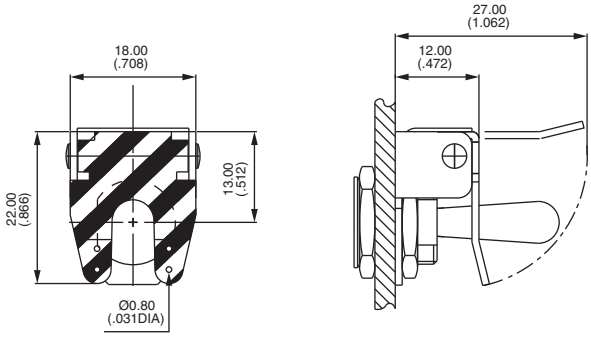

Plate features holes for wiring a seal.

To build a part number, select desired option from each category here below.

BUSHING SHAPES

For standard products

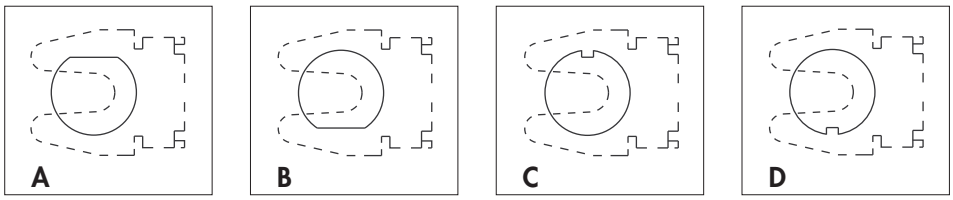

For other products

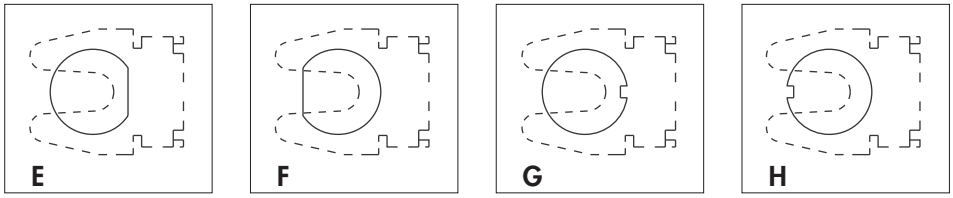

SWITCH GUARD SHAPES

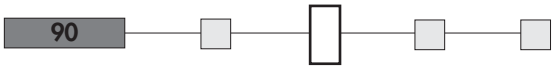

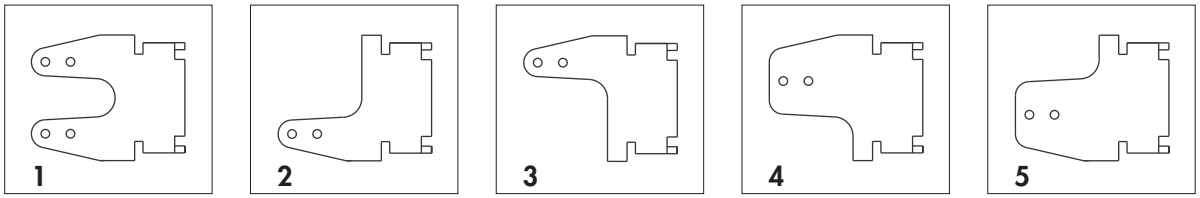

1. Locks in center position
2. Prevents down position
3. Prevents up position
4. Locks in down position
5. Locks in up position

SWITCH GUARD COLOURS

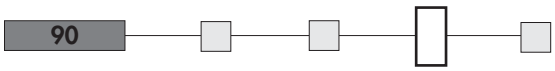

1	Blue
2	Black
3	Green
4	Grey
5	Yellow
6	Red
7/1	White
9	Orange
0	Striped (see below)

COLOUR OF STRIPES

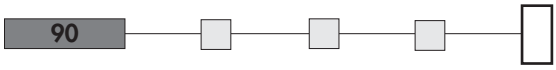

	Stripe ①	Stripe ②
A	Red	Black
B	Yellow	Black
C	Red	White
D	White	Black

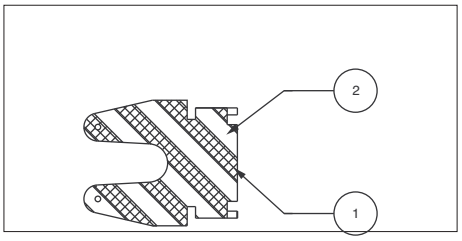

Series 90AX2328 for pushbutton series 13000 with Ø 11,9 (15/32) bushing

- Spring-loaded cover returning automatically in lower position.
  The user has to keep the cover raised while actuating the switch.

Model No	Colour
90AX2328-27	Black with white stripe
90AX2328-67	Red with white stripe

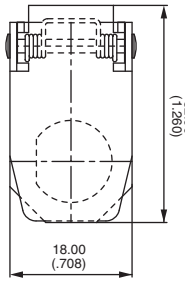

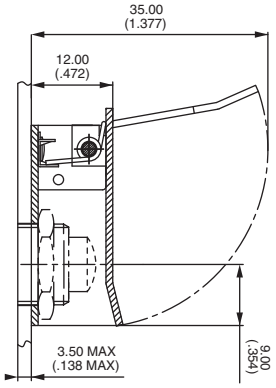

MSG series

Rugged switch guards for switch series 12000 - 3500 - 600H - 6000

New!

Specifications

- ❑ **Robust**
- ❑ **For harsh environments**
- ❑ **Modern, patented design**

SPECIFICATIONS

- APEM SAS patented design
- Operating temperature : -40°C to +85°C
- Storage temperature : -55°C to +85°C
- Salt spray : IEC 60068-2-11, test KA, 96 hours
- Mechanical life : 20.000 cycles

MATERIALS

- Support plate : matt black stainless steel
- Cap : thermoset

Switch guards are designed to prevent accidental lever operation on switches with Ø 11,9 (.468) or Ø 12 (.472) threaded bushing and lever length 17,5 (.688) outside bushing.
When the guard is raised, the lever can be operated freely.
When the guard is fully depressed, the lever is reset/locked in a stable position.
Note : For correct switch operation, the switch guard should be adjusted properly (see “Mounting“ on last page)

DIMENSIONS

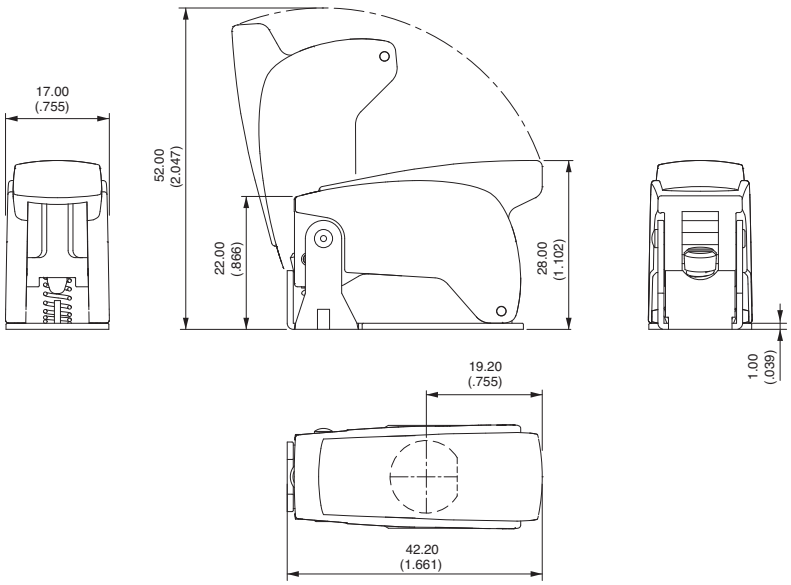

Note : Ø 1,60 mm holes for wiring a seal are standard on all models.

I

The company reserves the right to change specifications without notice.

MSG series

New! Rugged switch guards for switch series 12000 - 3500 - 600H - 6000

Overview

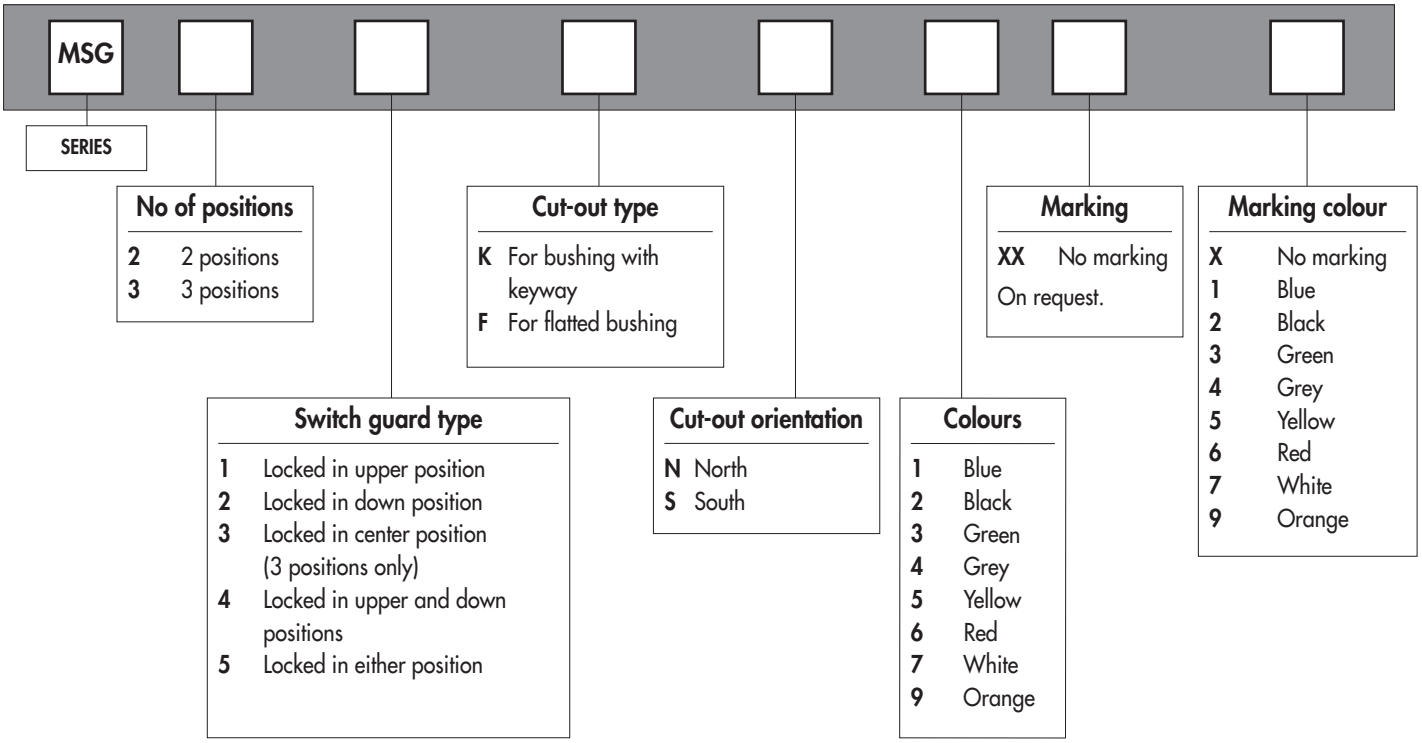

Dimensions : first dimensions are in mm while inches are shown as bracketed numbers.

NOTICE : please note that not all combinations of above numbers are available.
Refer to the following pages for further information.

Mounting accessories : supplied with the switch or to order separately (see "Hardware" at the end of the section)

Packaging unit : 40 pieces

MSG series

Rugged switch guards for switch series 12000 - 3500 - 600H - 6000

New!

NUMBER OF POSITIONS

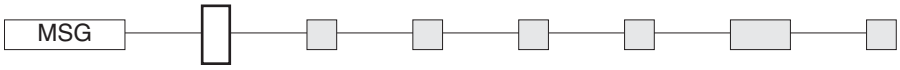

2 2 positions
3 3 positions

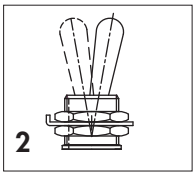

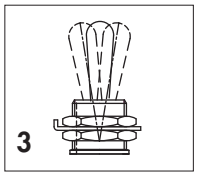

SWITCH GUARD TYPE

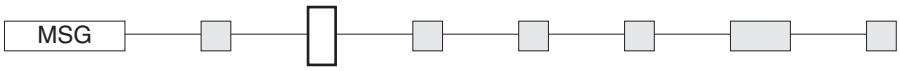

Locked in upper position

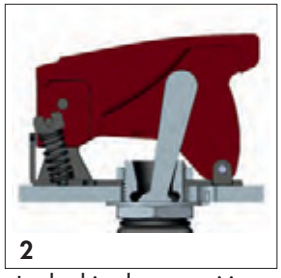

Locked in down position

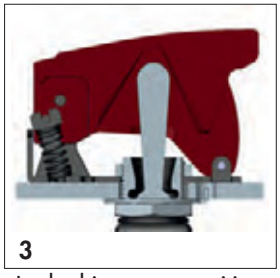

Locked in centre position (3 positions only)

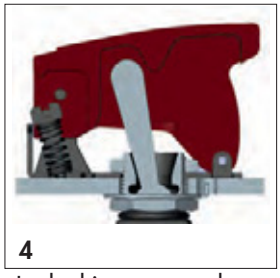

Locked in upper and down positions

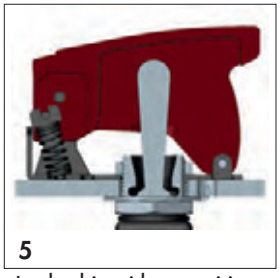

Locked in either position

CUT-OUT TYPE

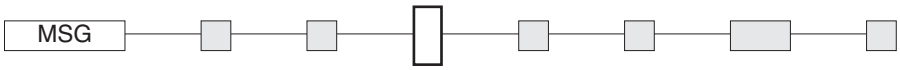

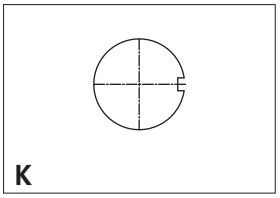

For bushing with keyway

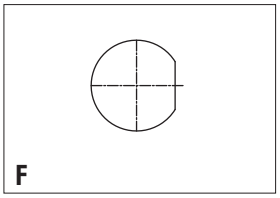

For flatted bushing

CUT-OUT ORIENTATION

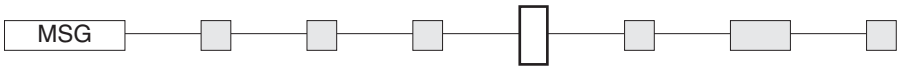

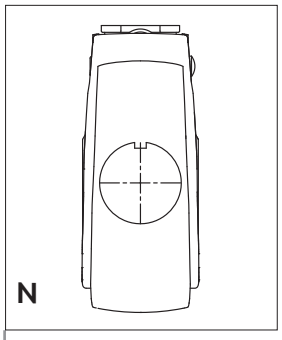

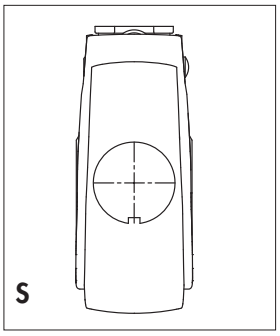

New! Rugged switch guards for switch series 12000 - 3500 - 600H - 6000

COLOURS

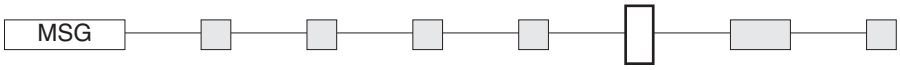

1 : blue - **2** : black - **3** : green - **4** : grey - **5** : yellow - **6** : red - **7** : white - **9** : orange

1 2 3 4 5 6 7 9

MARKING

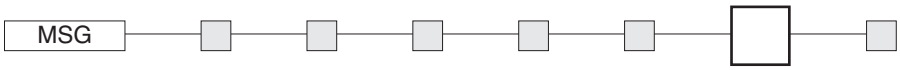

XX No marking

On request.

MARKING COLOUR

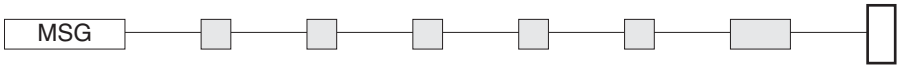

X No marking

1 : blue - **2** : black - **3** : green - **4** : grey - **5** : yellow - **6** : red - **7** : white - **9** : orange

MOUNTING

Standard

With K sealing option

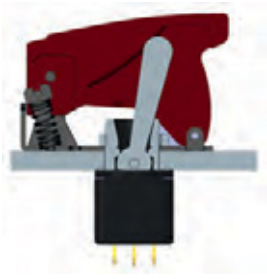

With X408 sealing option

CSG series

Switch guards for switch series 5000M - 600H

New!

Specifications

- ❑ **Modern, patented design**
- ❑ **Lightweight**
- ❑ **Anti-tamper wire seal hole as standard**

SPECIFICATIONS	MATERIALS
• APEM SAS patented design • Operating temperature : -20°C to +55°C • Storage temperature : -40°C to +85°C	• Support plate : thermoplastic • Cap : thermoplastic

Switch guards are designed to prevent accidental lever operation on switches with Ø 11,9 (.468) or Ø 12 (.472) threaded bushing and lever length 17,5 (.688) outside bushing.
When the guard is raised, the lever can be operated freely.
When the guard is fully depressed, the lever is locked in a stable position.
Please note that these guards are not intended to reset the actuator in the desired position.

Note : For correct switch operation, the switch guard should be adjusted properly (see "Mounting" on last page)

DIMENSIONS

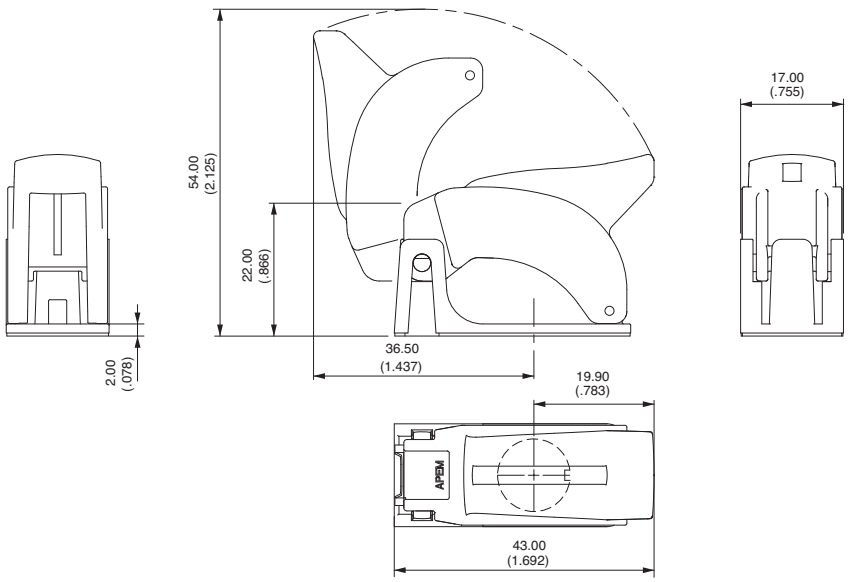

Note : Ø 1,60 mm holes for wiring a seal are standard on all models.

I

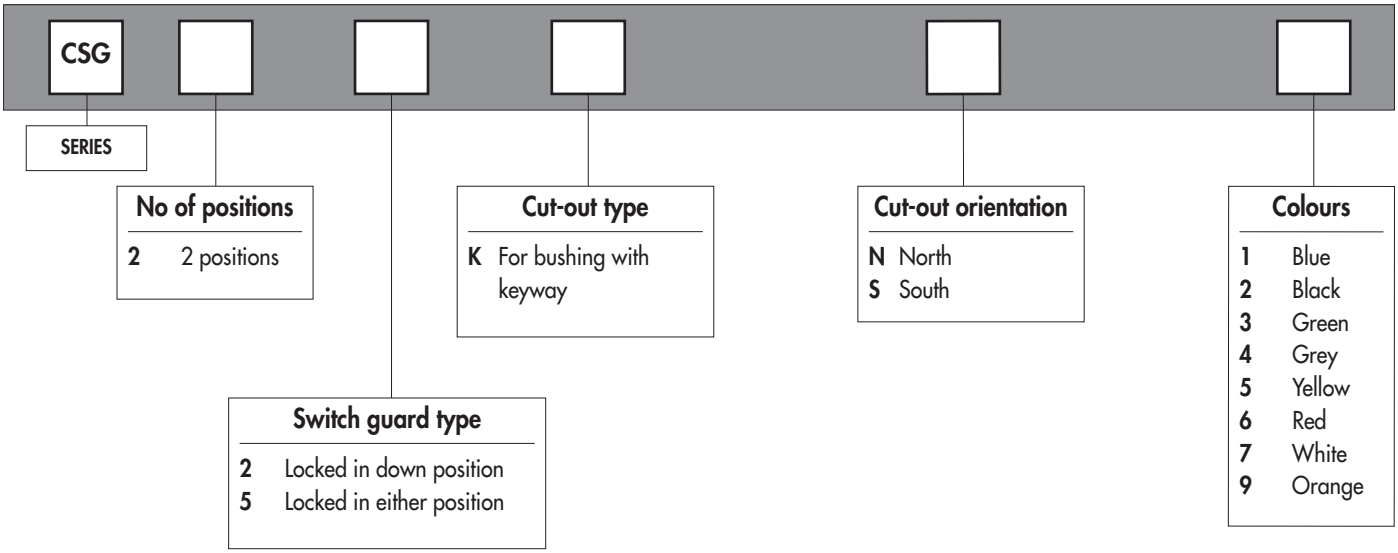

Dimensions : first dimensions are in mm while inches are shown as bracketed numbers.

NOTICE : please note that not all combinations of above numbers are available.
Refer to the following pages for further information.

Mounting accessories : supplied with the switch or to order separately (see "Hardware" at the end of the section)

Packaging unit : 40 pieces

CSG series

Switch guards for switch series 5000M - 600H

New!

NUMBER OF POSITIONS

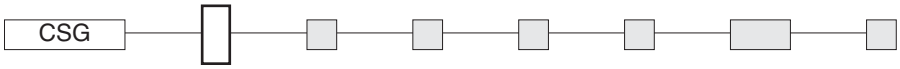

2 2 positions

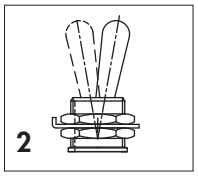

SWITCH GUARD TYPE

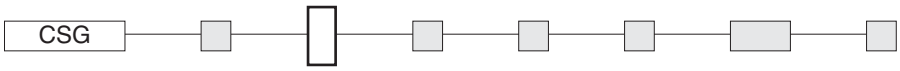

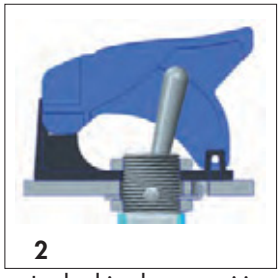

Locked in down position

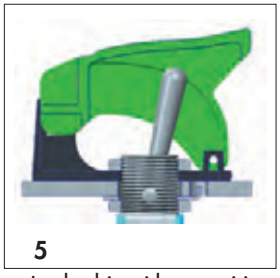

Locked in either position

CUT-OUT TYPE

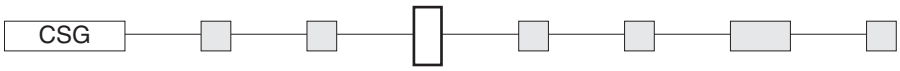

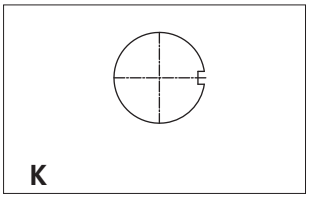

For bushing with keyway

CUT-OUT ORIENTATION

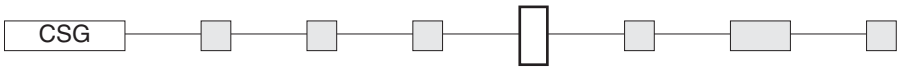

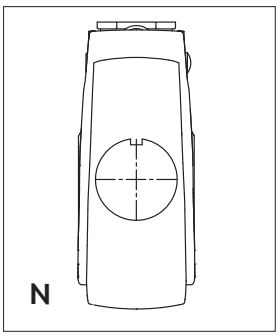

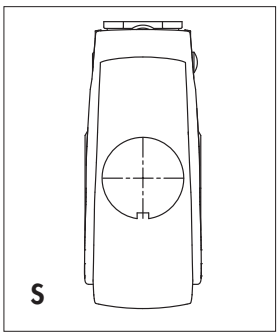

CSG series

New!

Switch guards for switch series 5000M - 600H

COLOURS

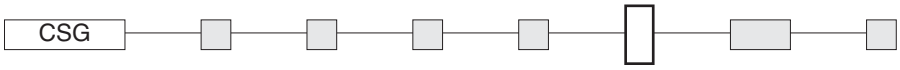

1 : blue - **2** : black - **3** : green - **4** : grey - **5** : yellow - **6** : red - **7** : white - **9** : orange

1 2 3 4 5 6 7 9

MOUNTING

Standard

With K sealing option

Hardware

For miniature switches

- Standard hardware is automatically supplied with the switches
- Non standard hardware is to be ordered separately

Hardware supplied with sealing options :
- K version : 2 hex nuts + sealing washer
- X408 option : 1 hex nut + 1 O-ring

STANDARD HARDWARE FOR SWITCHES Ø 6 (.236) - 5000 SERIES

HEX NUT

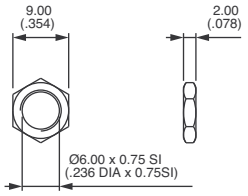

Nickel plated **U208**
Black **U726**

LOCKING RING

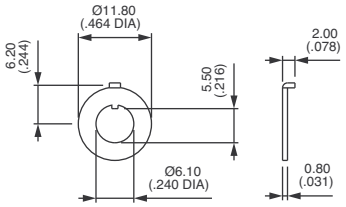

Nickel plated **U198**
Black **U728**

LOCKWASHER

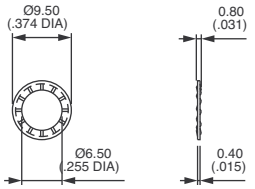

Stainless steel **U215**

NON STANDARD HARDWARE FOR SWITCHES Ø 6 (.236) - 5000 SERIES

KNURLED NUT

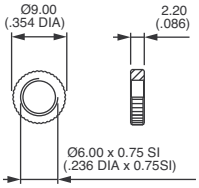

Chrome plated **U826**

SPECIAL NUT 12 (.472) ACROSS FLATS

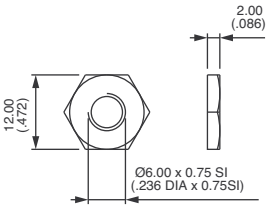

Chrome plated **U1916**

KNURLED CAP NUTS

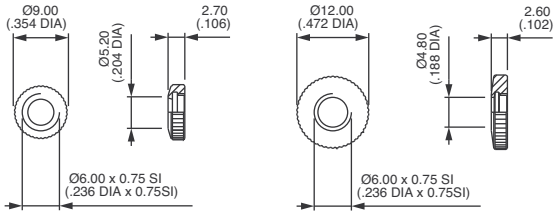

Chrome plated **U461**
Black **U502**

Chrome plated **U232**

STANDARD HARDWARE FOR SWITCHES Ø 6,35 (1/4) - ALL SERIES

HEX NUT

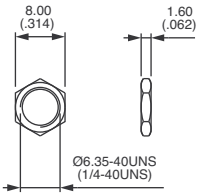

Nickel plated **U76**
Black **U94**

LOCKING RING

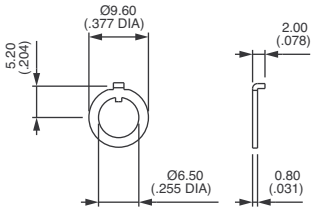

Nickel plated **U78**
Black **U93**

LOCKWASHER

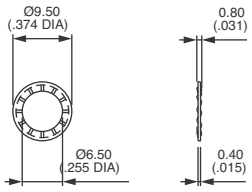

Stainless steel **U215**

	HARDWARE SUPPLIED (unsealed types)		
SERIES	HEX NUT	LOCKING RING	LOCKWASHER
SF	2	1	1
11000	2	1	1
13000	2	1	1
18000-8000-SP	2	1	1
21000N	2	-	-
5000	2	1	1
9400-9600	2	-	1

The company reserves the right to change specifications without notice.

NON STANDARD HARDWARE FOR SWITCHES Ø 6,35 (1/4) - ALL SERIES

KNURLED NUT

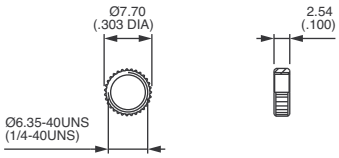

Nickel plated **U369**

KNURLED NUT

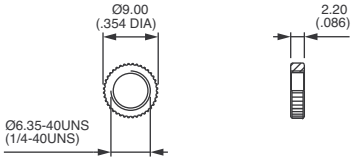

Nickel plated **U229**
Black **U230**

KNURLED NUT

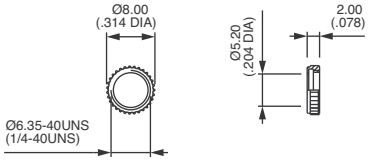

Chrome plated **U501**

KNURLED CAP NUT

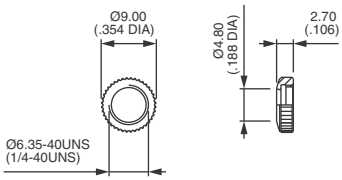

Chrome plated **U216 ***
Black **U218**

KNURLED CAP NUT

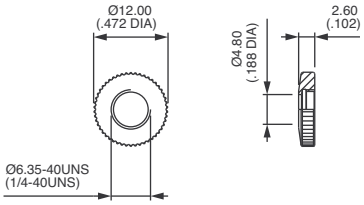

Chrome plated **U268 ***
Black **U725**

DRESS NUT

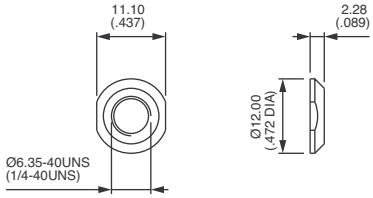

Nickel plated **U443**
Black **U848**

* U216 and U268 : consult factory for mounting on 11000 three and four pole, and 5000 locking lever models.

OTHER HARDWARE FOR SWITCHES Ø 6,35 (1/4) - ALL SERIES

CONIC CAP NUT

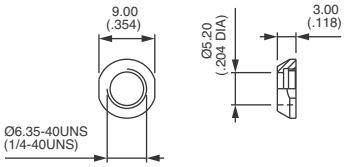

Nickel plated **U500**

CONIC NUT

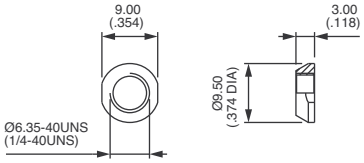

Chrome plated **U542**
Nickel plated **U561**

SEALING WASHER
for keyway bushing

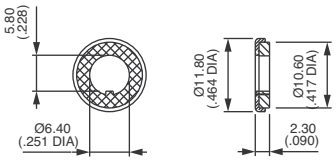

U360

SPECIAL LOCKING RING
Spacing 6,2 mm (.244)

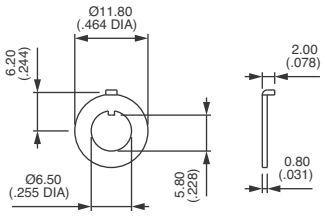

Nickel plated **U368**

SPECIAL LOCKING RING
Spacing 4,75 mm (.187)

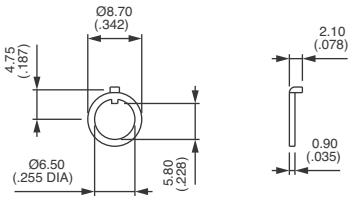

Nickel plated **U409**

SEALING WASHER
for flatted bushing

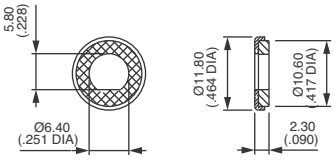

U5141

Hardware

For miniature switches

STANDARD HARDWARE FOR SWITCHES Ø 10 (.393) - 10400 AND 10600 SERIES

KNURLED CAP NUT (std for10600)

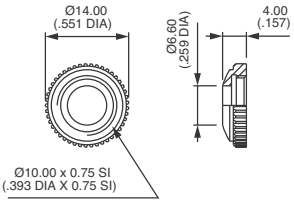

Chrome plated
U2220

KNURLED NUT (std for 10400)

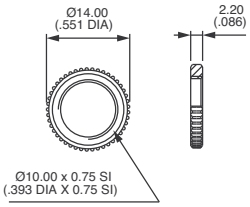

Nickel plated
U2311

HEX NUT

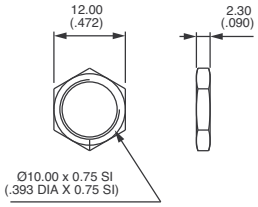

Nickel plated
U842

LOCKING RING

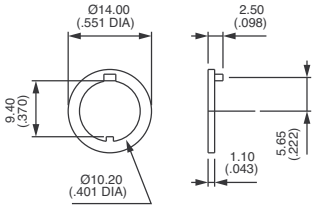

Nickel plated
U844

LOCKWASHER

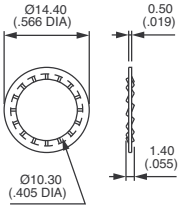

Zinc plated steel
U843

STANDARD HARDWARE FOR SWITCHES Ø 11,9 (15/32) - 12000, 13000X768 AND 5600M SERIES

HEX NUT

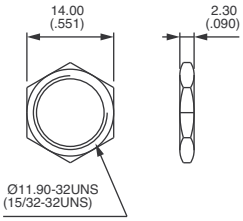

Nickel plated **U162**
Black **U41**

LOCKING RING

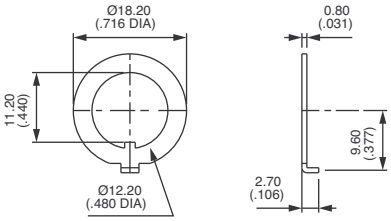

Nickel plated **U121**
Black **U12**

SERIES	HARDWARE SUPPLIED	
	HEX NUT	LOCKING RING
12000	2	1
13000X768	1	-
5600M	2	1
8000X718	2	1

NON STANDARD HARDWARE FOR SWITCHES Ø 11,9 (15/32) - 12000, 13000X768 AND 5600M SERIES

KNURLED NUT

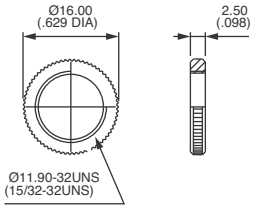

Nickel plated **U53**
Black **U1634**

KNURLED CAP NUTS

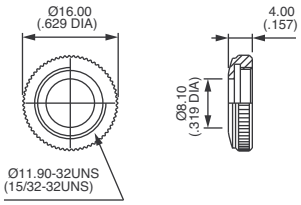

Chrome plated **U124**

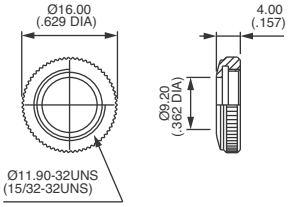

Chrome plated **U123**

LOCKWASHER

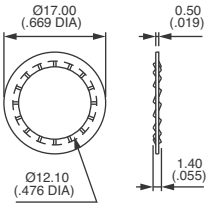

Zinc plated steel **U13**

HARDWARE FOR SWITCHES Ø 16

KNURLED NUT

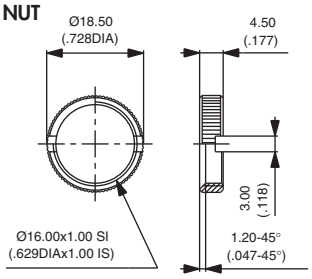

U3327

OTHER HARDWARE

SEALING WASHER

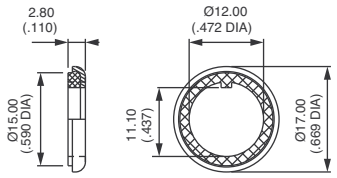

U60

WRENCHES

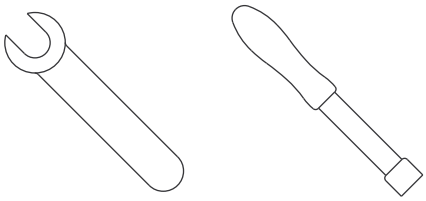

Available for some accessories.
Consult factory.

- Standard hardware is indicated by darkened boxes.
  For details of hardware supplied, please refer to beginning of each series.
- Special hardware is to be ordered separately.

NUTS	Bushing Ø 11,9 (15/32) thread 0,794-32UNS Series 3500 - 6000			Bushing Ø 12 (.472) thread 0,75 Series IB/IS - IP - 660 - 600H - 600NH 1000 - 1200 - 1500 - 1600 - 1700 - 3600 - 4000		
	Chrome plated brass	Nickel plated brass	Black brass	Chrome plated brass	Nickel plated brass	Black brass
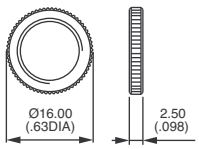		**U53**	**U1634**	**U412**	**U411**	**U413**
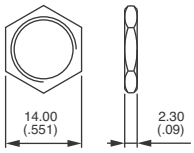	**U92**	**U162**	**U41**	**U212**	**U166**	**U183**
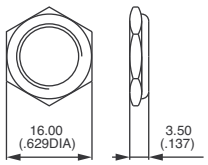 Hex cap nut				**U35**		
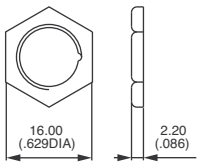 PAL nut					**U42** (passive zinc plated steel)	
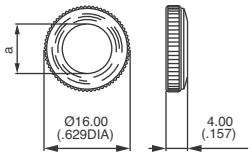 Knurled cap nut	**U123**			**U117** a = 8,5 (.334) **U118** a = 10,3 (.405)		**U129** a = 8,5 (.334) **U130** a = 10,3 (.405)

INSULATED NUT U520									
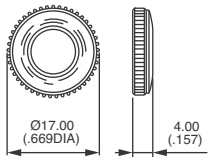	For threaded bushing Ø 12 (.472) x 0,75 IS Series 1500 - 4000 - 600NH - 6-600NH								
	Blue	Black	Green	Grey	Yellow	Red	White	Chrome plated	Orange
ABS or polyamide with glass fibre	**U521**	**U522**	**U523**	**U524**	**U525**	**U526**	**U527/1**	**U528**	**U529**

The locking ring U121 (nickel plated) or U12 (black) is only provided with tropicalized switches version T or G and with series 3500 - 6000.

The lockwasher U13 must be ordered separately, except for series 660, 3500 and 6000.

Hardware

For industrial switches

HARDWARE FOR SWITCHES Ø 12 (.472) AND 11,9 (15/32)

LOCKING RING

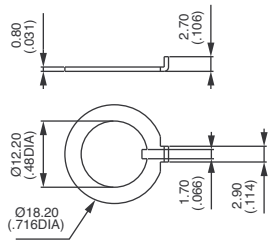

Nickel plated **U121**
Black **U12**

LOCKWASHER

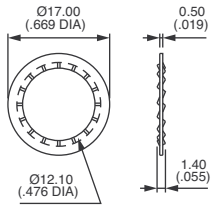

Zinc plated steel **U13**

SEALING WASHER

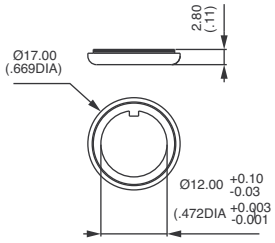

Stainless steel and neoprene **U60**

SEALING WASHER FOR BOOTS

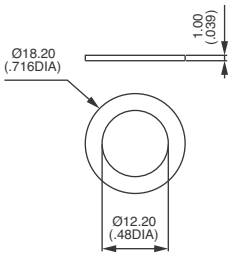

Nylon **U21**

GROUND CONNECTOR

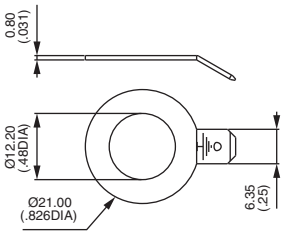

Nickel plated **U187**

LOCKWASHER

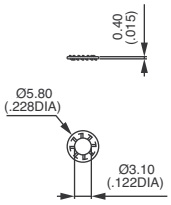

Zinc plated steel **U14**

PLATES FOR SWITCHES Ø 12 (.472) AND 11,9 (15/32)

Marche - arrêt

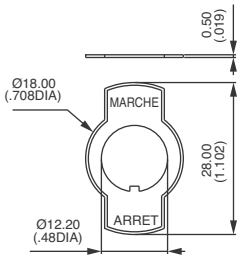

U17

ON - OFF

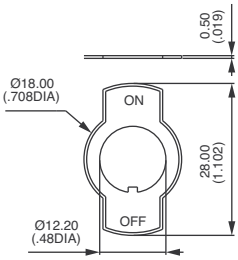

U19

EIN - AUS

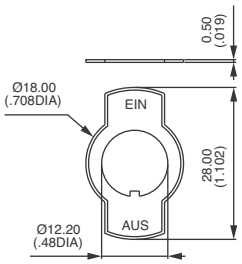

U99

I - 0

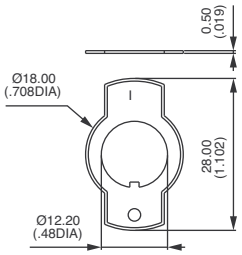

U1050

CONNECTING SCREW

Supplied with the switches

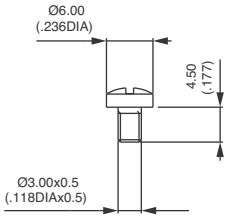

U03

HARDWARE FOR AV SERIES (ANTI-VANDAL AND SECURITY PUSHBUTTON SWITCHES)

HEX NUT FOR MODELS Ø 16 (.629)

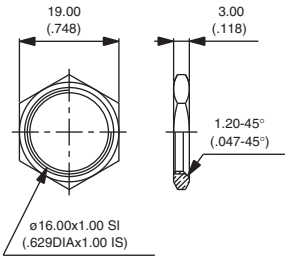

10-621

KNURLED NUT FOR MODELS Ø 16 (.629)

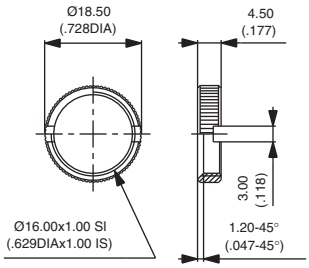

10-960-5

KNURLED NUT FOR MODELS Ø 19 (.748)

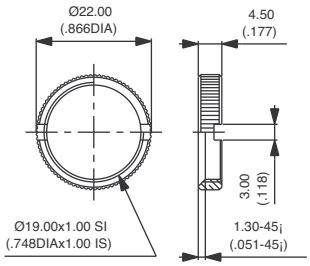

U1977-5

HEX NUTS FOR MODELS Ø 19 (.748)

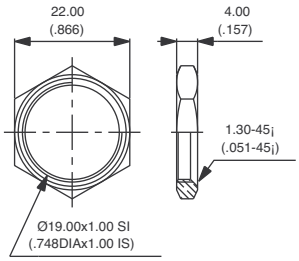

10-855-5

Wrench for nut U1977-5 available under part number **U1929**.

HEX NUTS FOR MODELS Ø 22 (.866)

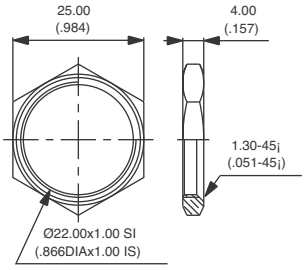

10-856-5

HEX NUT FOR MODELS Ø 24 (.944)

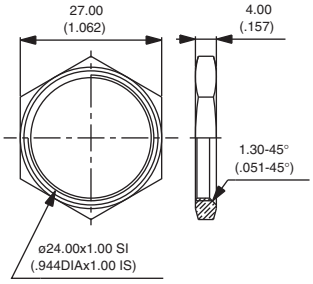

U2059-5

All above nuts are made of nickel plated brass.
For switches with front panel sealing (option K), a neoprene O-ring is supplied with each nut.

Custom products

Section J

Custom Products

Available for sale

The SWITCHES shown below are examples of catalog products adapted to meet a specific need. They illustrate APEM's capability to develop custom products. They are available for sale and can be purchased under the model number indicated in bold characters.

5000 series class II

- Double insulation
- Wire lead terminals to customer's specifications
- Flatted lever of 21,3 mm (.838) outside bushing

5636A-8 X1231

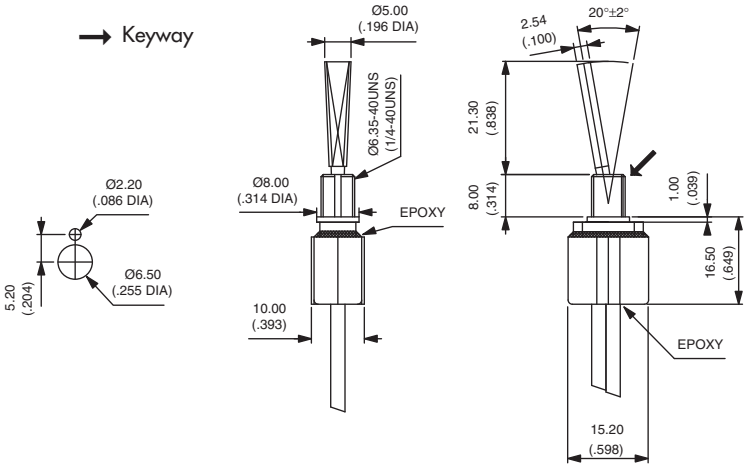

IR with translucent backlighted bezel

This model is intended to offer better illumination.
It allows the user to see the status of the switch even if not in front of the device and the illumination remains visible when the finger is on the plunger.
This option is available on nearly all IR models.
On request.

Fully sealed module including 2 pushbuttons

This module consists of a specific plate and 2 standard IP pushbuttons.
Front panel sealing is enhanced with the use of U5125 sealing boots.
Rear panel sealing is also reinforced with additional resin.
This solution is ideal for outdoor applications where sand, dust, rain or condensation may occur.
On request.

J

The company reserves the right to change specifications without notice.

The PUSHBUTTON SWITCHES shown below are examples of catalog products adapted to meet a specific need. They illustrate APEM's capability to develop custom products. They are available for sale and can be purchased under the model number indicated in bold characters.

Vertical right angle SMT TP series

- Excellent stability and mechanical strength
- Saves space on the printed circuit board
- Supplied in tape and reel packaging for pick and place equipment
- Also available for TL series toggle switches

TP32VS83585

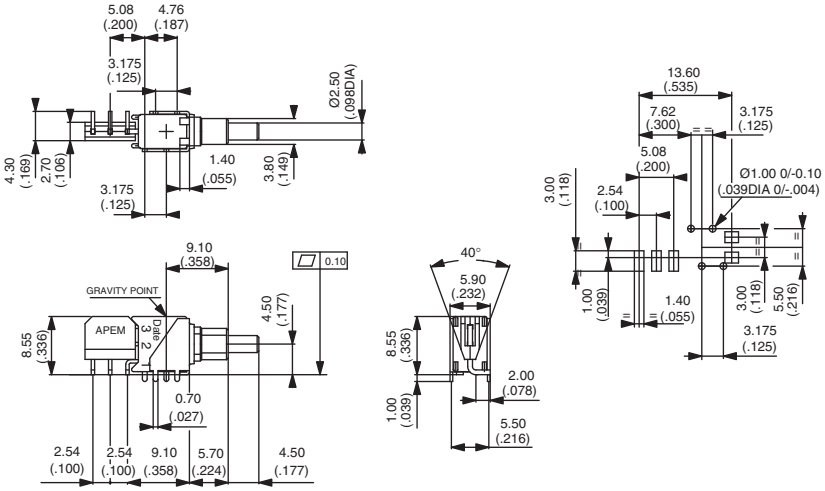

13000 series with mechanical stop and stranded wire leads

- External mechanical stop designed to protect contact mechanism against excessive force
- Stranded wire leads to customer specifications : AWG24, MIL approved
- Terminals/wires protected by heatshrink sleeves
- Matt black finish

13445CDG-29 X1204

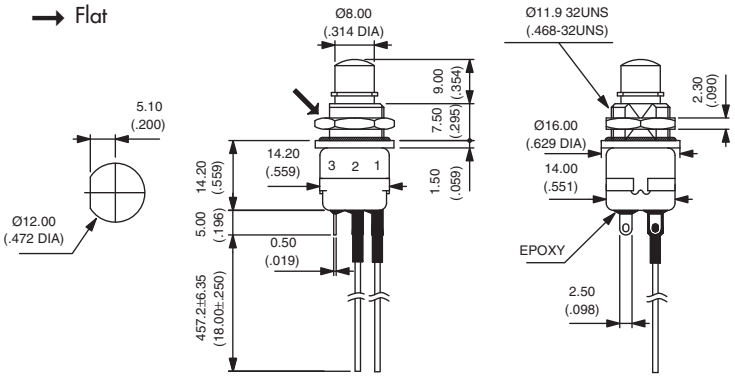

Custom Products

Available for sale

The PUSHBUTTON SWITCHES shown below are examples of catalog products adapted to meet a specific need. They illustrate APEM's capability to develop custom products. They are available for sale and can be purchased under the model number indicated in bold characters.

Limit switch

A limit switch is an electro-mechanical device consisting of an actuator mechanically linked to a set of contacts. When an object comes into contact with the actuator, the device operates the contacts to make or break an electical connection.

This custom switch has been developed to detect the extreme position of a clutch pedal, to operate the electrical clutch in a very harsh environment.

- Stainless steel actuator
- Sealing : rear IP67, front IP40
- Operating temperature : -30°C to + 65°C
- Electrical life : 1.000.000 cycles
- Silver contacts
- Current/voltage rating : 2A 12VDC

DA058

AV pushbutton with very long life expectancy

- Highly reliable contact mechanism - Silver contacts
- Electrical life : 5 million cycles at 250mA 24VDC
- Mechanical life : 10 million cycles
- No sealing

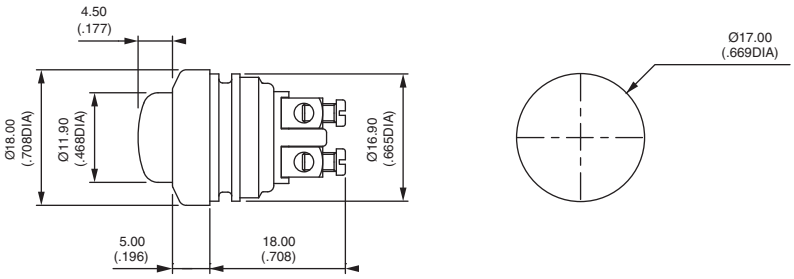

AV1630A9X2346

The SWITCHES shown below are examples of catalog products adapted to meet a specific need. They illustrate APEM's capability to develop custom products. They are available for sale and can be purchased under the model number indicated in bold characters.

Double pole NK series

- Two switches with a common actuator
- Terminal spacing : 5,08 mm (.200)
- Travel : 1,60 mm (.062)

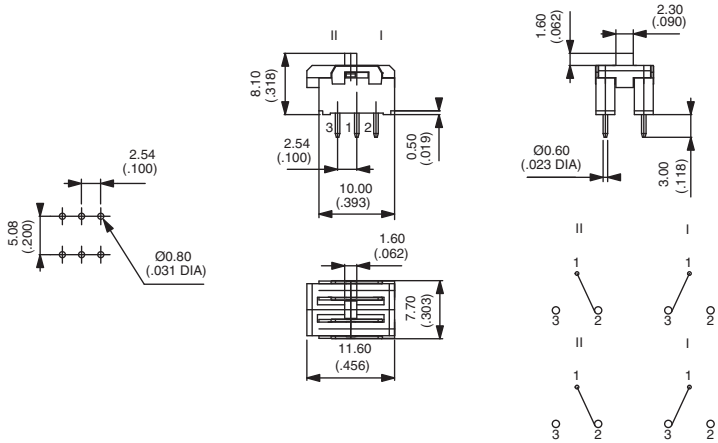

NK246 X1211

Pendant switch

- Remote hand-held pushbutton
- Sealed to IP67
- Coiled cord with a 3,5 mm jack plug, cord length up to 4 meters
- Applications : nurse call, push-to-talk...

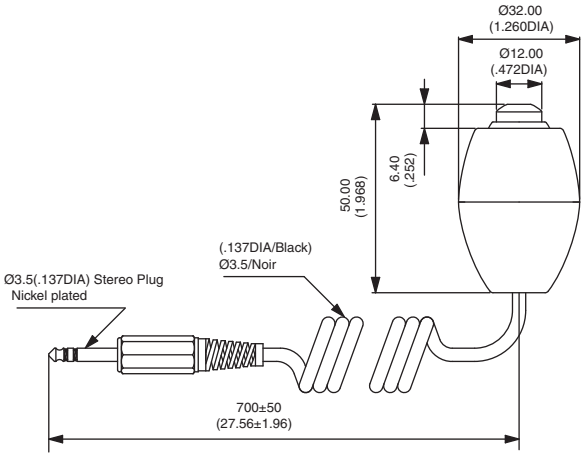

ISR3SAD200107

Custom Products

Customer exclusivity - switches

The custom switches shown below have been entirely developed to APEM's customers' specifications. They are the exclusive propriety of the customer who has supported the tooling costs. They illustrate APEM's capability to find solutions to the most specific switch requirements.

Rocker detect switch

This rocker is used as a detect switch to stop a motor.

It has been engineered to fit a tight space specified by the customer.

The actuator shape has been specially designed for detection of the extreme positions of the linear motor in which the switch is mounted.

"One key - one function" switch

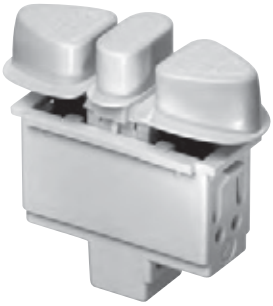

This custom switch includes 3 keys designed to control a window blind motor.

The two side keys are available in momentary or maintained functions or a combination momentary/maintained configuration.

This product was developed to meet NF-EN6066-1, a requirement of the application.

"Reed" rocker switch

This rocker switch features :

- Very long electrical life : > 2.000.000 cycles
- 2 electrical functions (3 maintained or momentary positions)
- Mounting from rear of panel
- Stranded wire lead terminals

Safety enabling switch

- Three position switch for safety "dead man" application, complying with IEC 60947-5-8.
- Redundant contacts with "emergency stops".
- Patent pending

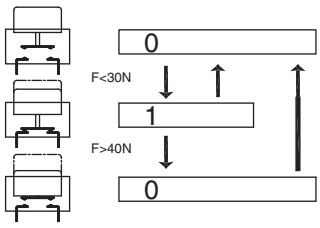

0 = open contact
1 = closed contact

APEM's experienced switch design team, advanced development tools and vertical integration enable the company to develop products beyond conventional switches. The highest level of integration is achieved with modules combining several technologies to offer added value and reduced cost.

- The integration of the different functions begins at the design stage and results in higher product reliability, improved performance, reduced weight and easier assembly.
- This approach reduces costs and development time for the equipment manufacturer.
- Each module is an innovative solution and therefore requires specific tooling for injection, stamping, testing and assembly.
- Tooling costs are amortized on large production runs.

The example below is an integrated module for an automotive application.

Door latch module

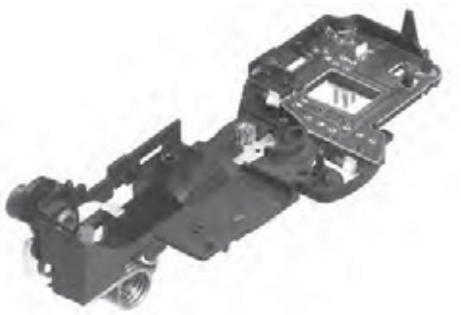

- **Customer problem**

Several components (PC boards, connectors, switches, connector pins for motors, motors), thus several suppliers and assembly stages.
Lack of reliability due to the numerous electrical connections.

- **APEM solution**

A single integrated module, 100 % tested, ready for mounting.

Technical information

SPECIFICATIONS

Dimensions, specifications and data shown in this catalogue are subject to change without notice. Consequently, they are not contractual in any case. Electrical, mechanical and endurance specifications are based upon in-house tests made by APEM. These tests are conducted using internationally recognised procedures. In the event of a product being used under different conditions, the user must ensure the product's suitability for use under those conditions. Incorrect storage, handling, operation or application of the product may result in damage to the product or equipment.

The negative value indicated under "Operating temperature" is given for normal usage conditions (products free of moisture, which could generate frost or ice and block the mechanism).

The specifications give the technical performances of the switches. If the equipment on which our products are mounted is submitted to safety standards, the customer should select approved models or models conforming to the standards (marked CE only). Consult factory for details of models that can be marked CE.

DRAWINGS

Products are shown with their standard actuator (for other actuators, see options).
Scale : drawings in this catalogue are to different scales : ask for a data sheet if you need other dimensions for a specific part number.

TOLERANCES

Unless otherwise specified, the general tolerance for dimensions in this catalogue is ± 0,3 (.012).
Overall dimension tolerance is ± 0,5 (.020). Ask for a data sheet for further information.

SOLDERING CONDITIONS

Hand soldering with iron : 300°C, 3 seconds max.

SEALING OF TERMINALS

Due to the new generations of active flux, epoxy sealing of terminals is preferred, to prevent any risk of switch contamination.

ROHS II COMPLIANCE

The RoHS directive 2011/65/EC of the European parliament and of the Council of June 8, 2011 restricts the use of certain harzardous substances in electrical and electronic equipment: Mercury (Hg), Cadmium (Cd), Hexavalent Chrome (Cr+6), Polybrominated biphenyls (PBB) and Polybrominated diphenyl ethers (PBDE including decaBDE), Lead (Pb).
. Standard products manufactured by APEM are already and will remain in compliance with the restriction of the marketing and use of the above mentioned substances imposed by such directive.
. Switches for printed circuit boards with tin/lead plated terminals (SnPb) have been replaced by components with pure tin plating.
. For specific options using LED illumination, wires are soldered with lead-free solder.
There is no change of part number for RoHS compliant products.
Some specific products or options can still be supplied in non-RoHS version with customer's agreement.

Technical information

Contacts and ratings

CONTACT MATERIALS

Several contact technologies are available depending on models :

For miniature switches

A End contacts : silver.
Center contacts and terminals : brass, silver plated.
For high ratings at 125VAC - 250VAC or over 0,1A 30VDC (levels III and IV).

AD End contacts : silver with gold plating over nickel barrier.
Center contacts and terminals : brass, gold plated.
For low level applications (levels I and II).
Can be used for high ratings (level IV),
the gold layer being considered only as a protection against oxidation during storage.

CD or **LD** Contacts and terminals : brass with gold plating over nickel barrier.
For low level applications up to 20mA 20VDC or 80mA 5VDC (levels I and II).

X780 Silver rivet, gold plated (11000 and 12000 series).

For industrial switches

A End contacts : silver rivet or silver inlay.
If not specified in model number, the contact material is indicated in the specifications of each series.

C Silver plated copper or brass.

Silver cadmium oxide contacts (**S**) which used to be available on the 4000 - 600H - 600NH and 2600 series, are discontinued and will be replaced by silver tin oxyde contacts before 2005.

HIGH INRUSH CURRENTS

Special contact materials and switch constructions allow particularly high inrush currents to be taken by some models of the 5000, 11000 and 12000 series.

ELECTRICAL LEVELS

1. Standard miniature switches

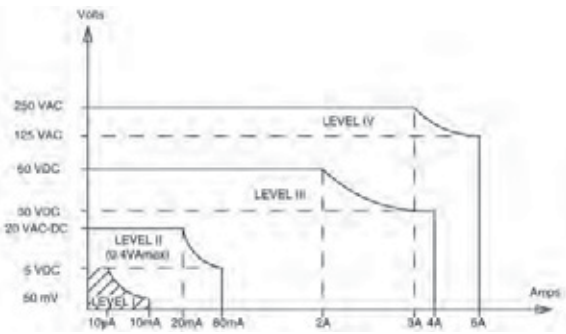

Recommended contacts

Level I : very low level
Telecommunications
D, AD or CD contacts

Level II : low level
General electronic applications
D, AD or CD contacts

Level III : intermediate level
Low voltage
Electric appliances
A or AD contacts

Level IV :
Mains power supply
A contact

2. Industrial switches - silver contacts

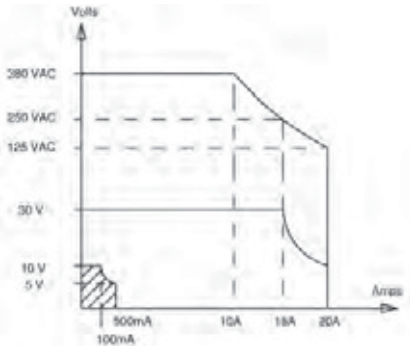

The above curves feature all the ratings available in our product range. Hatched areas show minimum ratings. Maximum ratings are indicated in the specifications of each series. Note that max. current is given for standard life expectancy. For specific applications, higher currents can be applied, resulting in reduced life expectancy and vice-versa. Consult factory.

LOW CURRENT OR DRY CIRCUIT (level I)

The quality of the gold plating (hardness, porosity, adherence) and the design of the contacts (pressure or sliding contact) allow the use of very low currents down to 10µA 5V or 10mA 50mV depending on models, measurable according to IEC 512-2, test 2a.

Technical information

Positions and connections for 3-way switches

Function 4

MINIATURE SWITCHES

5000 and 7000 series are available with CT or TH connections.
Desired connections are to be specified in enlarged box of model structure.

12000 and S series are available with TH connections only.

Model structure 5000 and 7000 series

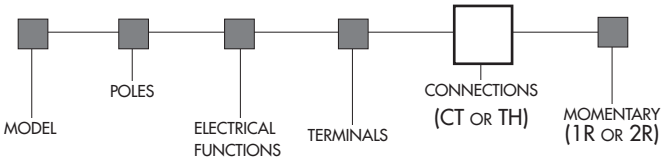

FUNCTION 4 - TYPE TH (preferred) - 5000 - 7000 - 12000 - S - SR series

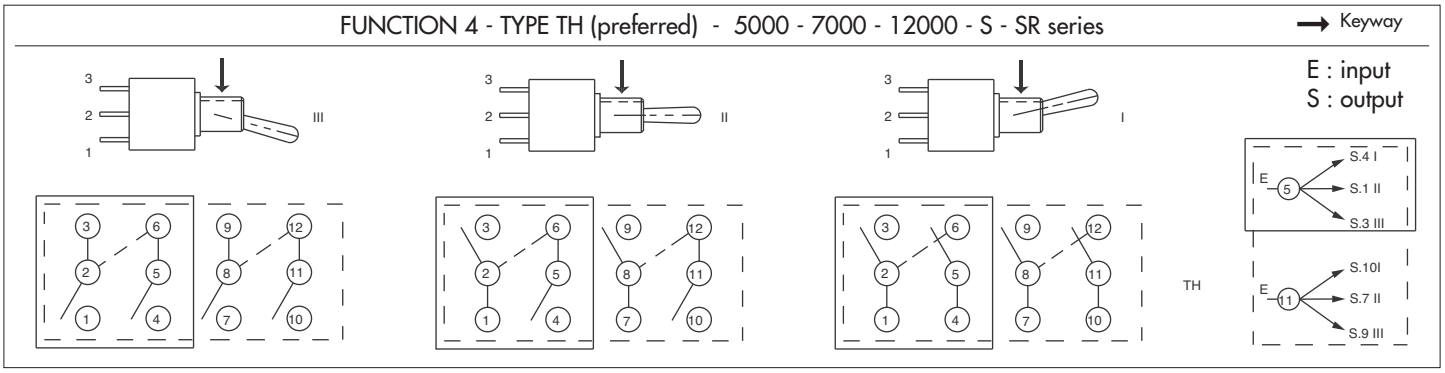

FUNCTION 4 - TYPE CT (reversed) - 5000 - 7000 series

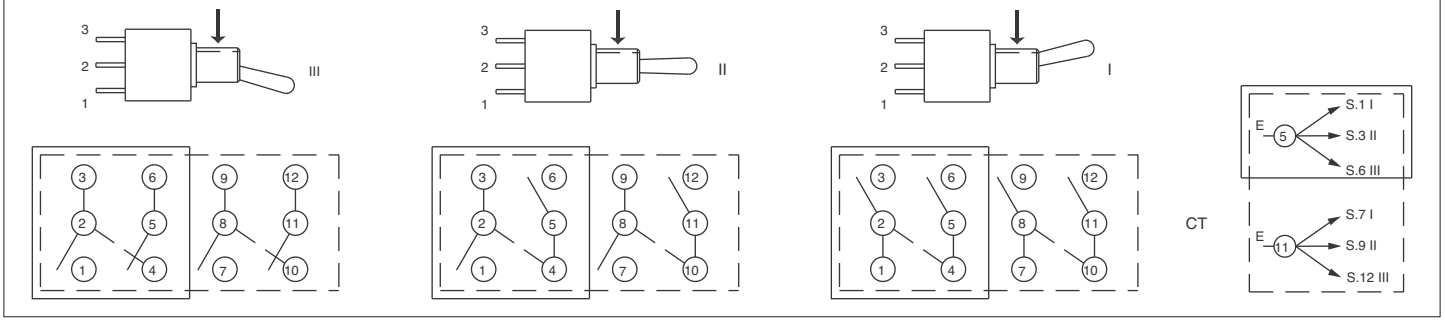

Single pole switches in a double pole case ☐ SP
Double pole switches in a four pole case ▭ DP

⚠ Dotted line between poles : jumper to be wired by the user.

INDUSTRIAL SWITCHES : 600 600H - 3600NF - 6000 AND 2600 SERIES

FUNCTION 4			FUNCTION 4-1R (momentary one side)			FUNCTION 4-2R (momentary both sides)		
ON 5-6 2-3	ON 5-6 2-1	ON 5-4 2-1	MOM 5-6 2-3 ▲	ON 5-6 2-1	ON 5-4 2-1	MOM 5-6 2-3 ▲	ON 5-6 2-1	MOM 5-4 ▲ 2-1

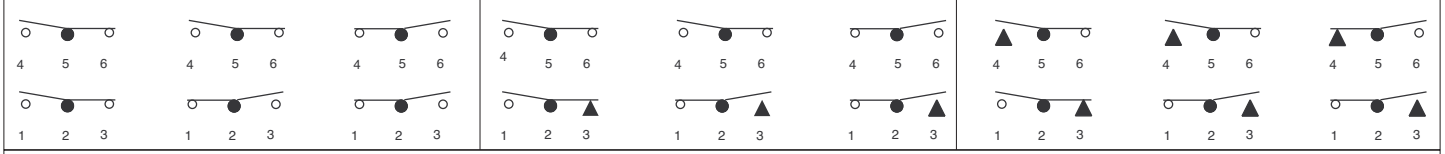

• Common ° Maintained ▲ Momentary

Terminals 2 and 6 must be connected by the user for a 3 way switch. Single pole switches in a double pole case.

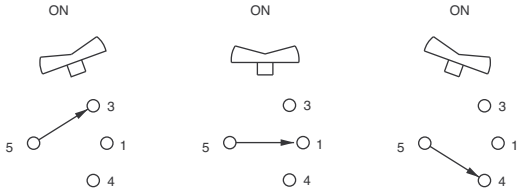

Technical information

Switches for peak currents

- For switching power supplies, DC-DC converters, motors ...
- Peak current with 125/250VAC according to IEC 1058 (Fig 1) and direct current 60VDC (Fig 2)
- 2 maintained positions

Testing circuit AC voltage
Figure 1

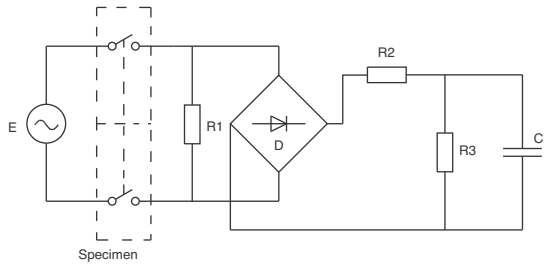

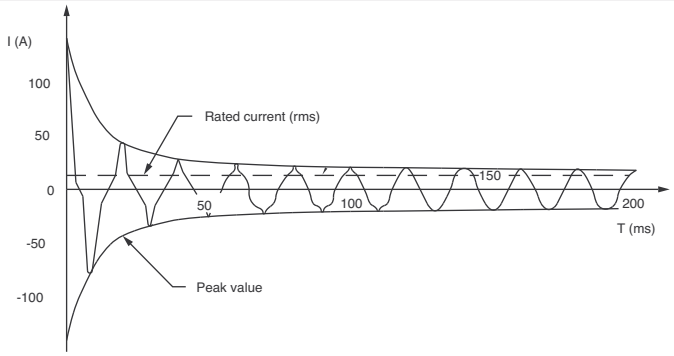

Testing circuit DC voltage
Figure 2

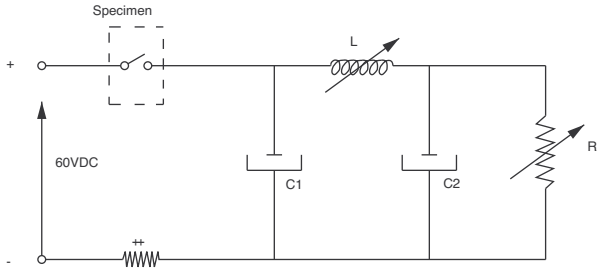

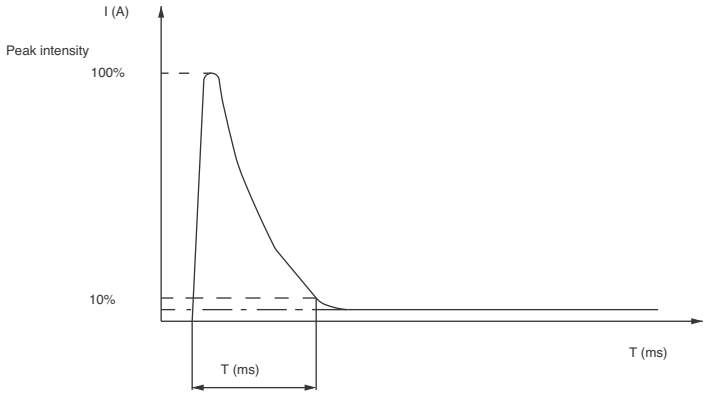

Current/voltage rating examples :

4 / 100A → Nominal AC current; 4 / 100A → Inrush current (Fig 1)

250VAC → Max. AC voltage

10.000 cycles → Life

3 / 80A → Nominal current; 3 / 80A → Inrush current (Fig 2)

(10 ms) → Inrush duration

60VDC → Max. voltage

10.000 cycles → Life

See 11000 and 12000 series, section A, special option X910.

Technical information

Degrees of protection : IP and IK codes

The degree of protection is indicated by 2 letters and 2 numbers.
Example : I P 6 5

protection against water
protection against dust

IP•• degree of protection provided by the enclosures of electric appliances according to IEC 60529 and DIN 40050.

IK.•• degree of protection provided by the enclosures of electric appliances against external mechanical impacts according to EN 62262.

1st number : protection against ingress of solid objects		
IP	**tests**	
0		Non-protected
1		Protected against solid objects of 50 mm (1.968) and greater
2		Protected against solid objects of 12,5 mm (.492) and greater
3	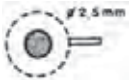	Protected against solid objects of 2,5 mm (.098) and greater
4		Protected against solid objects of 1 mm (.039) and greater
5		Dust-protected (no harmful ingress)
6		Dust-tight (no ingress)

2nd number : protection against liquids		
IP	**tests**	
0		Non-protected
1		Protected against vertically falling water drops
2		Protected against vertically falling water drops when enclosure tilted up to 15°
3		Protected against water sprayed vertically at an angle up to 60°
4		Protected against splashing water
5	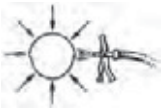	Protected against water jets from any direction
6	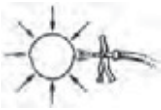	Protected against powerful water jets
7	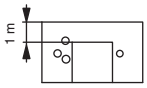	Protected against the effects of temporary immersion in water (1 m water, 30 minutes)
8	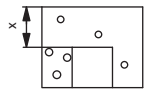	Protected against the effects of continuous immersion in water (depth x to be specified)

IK code : mechanical protection
The degree of mechanical protection is now defined by the **letters IK** according to EN 62262.

For an additional protection of switches used in harsh environments against sand, frost or other contaminants that may cause switch failure, **we recommend the use of sealing boots**, section H.

Sealing IP69K

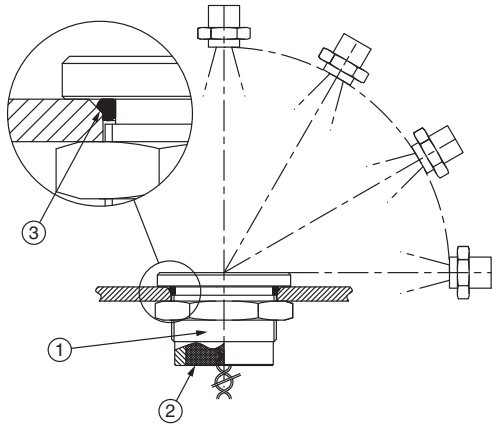

High pressure, high temperature wash down

IP69K test conditions

. Pressure : 80 - 120 bars
. Distance : 15 cm
. Temperature : 80°C ± 5°C
. Flow : 14 - 16 l/mn
. Duration : 30 seconds per position

Illustration : PBA series switch.

① One-piece bushing
② Epoxy sealed terminals
③ O-ring

Technical information

Surface mount

TYPICAL SMT REFLOW PROFILE

The P.C. board, carried by a conveyor belt, goes through the different areas of a reflow soldering oven :
- pre-heating (maximum 170°C, 60 secs)
- reflow peak (maximum 245°C)
- final cleaning (optional)

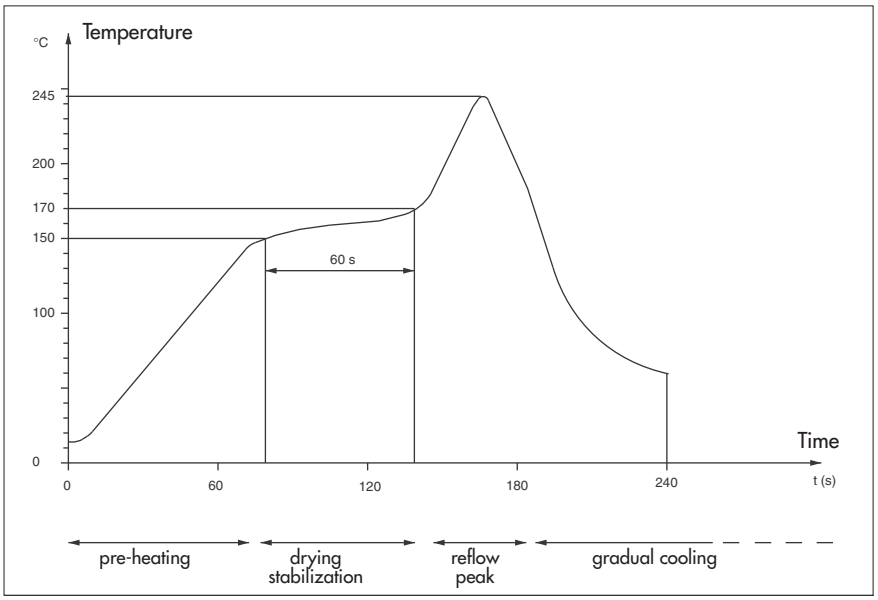

BOARD REWORK TECHNIQUE

Hot air reflow technique is preferred. Avoid use of a traditional soldering iron.

Caution : Excessive and/or repeated high temperature exposure may affect switch performance and reliability.

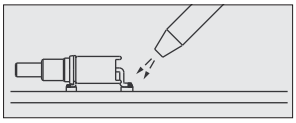

TYPICAL LEAD-FREE SMT REFLOW PROFILE

Complying with the ROHS directive.

Example of Pb-free profile requirements for soldering heat resistance		
Parameter	Reference	Specification (small case)
Temperature gradient in preheating		3°C/s max.
Soak time	t_{soak}	2-3 minutes
Time above 217°C	t_1	60-150 seconds
Time within 5°C of actual peak temperature	t_3	20-40 seconds
Peak temperature in reflow	T_{peak}	260°C (+0/-5°C)
Temperature gradiant in cooling		6°C/second max.
Time 25°C to peak temperature		8 minutes max.

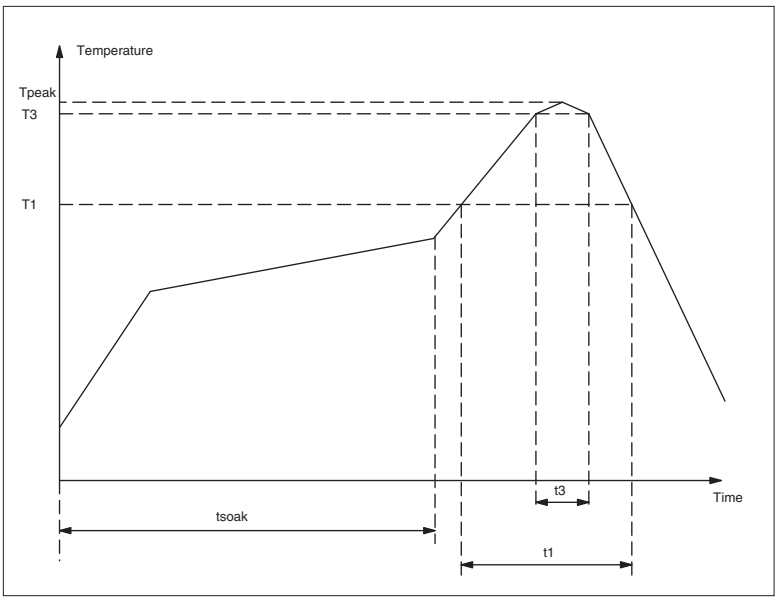

Glossary

AC : Alternating current; electric current that continually reverses direction at a fixed frequency (see VAC).

ACTUATION FORCE : (Operating Force) : The force required to change the actuator of a switch from one position to another. Torque for rotary products.

ACTUATOR : A movable part of a switch which causes a change in the electrical configuration of the switch. e.g. : Toggle, Rocker, Slider, Paddle, Pushbuttons, Shaft

ALLOY : A metal created by combining two or more metals to obtain a specific physical property

ALTERNATE ACTION : Push to close and push to open the switch. A given circuit condition remains after removal of actuating force. Also known as "push-push switching action". Typically, alternate action pushbuttons do not visually indicate the position of the contacts. Contrast to latching action.

ANGLE OF THROW : Indicates total travel arc on toggle or rocker switches. Unit of measure : degrees

ANTISTATIC : An antistatic device will withstand a specified potential without conducting between the actuator and any conducting element. Usually the terminals or bushing. Unit of measure : typical value 8-20 kilovolts DC.

ANSI : American National Standard Institute; a standard-setting agency of the United States which approves the design and/or performances of electronic/electrical components distributed in the world market.

ARCING : The flow of electric current between switch contacts during opening or closing of the contacts. This current flow can be damaging to the contacts of a switch.

BIFURCATED CONTACT : A wiping movable contact consisting of spring fingers that grip fixed contacts. Typically found in slide switches. Self cleaning action. See Wiping Contact.

BOUNCE : The repeated rebounding of the moveable contact during the transfer from one throw to the next.

BRASS : An alloy of zinc and copper

BREAK-BEFORE-MAKE (Non shorting - B.B.M.) : On actuation, the movable contact breaks contact with one fixed contact before making contact with another fixed contact. Contrast with make-before break. Typical of toggle and pushbutton switches.

BUTT CONTACT : A contact mechanism in which the movable contact makes contact with the fixed (stationary) contact without wiping motion between the surfaces. Typical of toggle and pushbutton switches. See Wiping Contact.

CAPACITIVE LOAD : A load in which the initial current on making (closing) of the contacts is higher than the steady state current. Current leads voltage in capacitive loads. See Resistive Load, Inductive Load, Power Factor, Inrush.

CARRYING CURRENT : The maximum current that can be passed through the already closed contacts of a switch.Contrast with "Contact Rating".

CLEARANCE (spacing) : Distance through air between electrically live parts of opposite polarity or to ground.

CONTACT (Contact area) : The metal surfaces that come into physical contact to complete an electrical circuit. These surfaces are found on movable contacts (see) and terminals (see).

CONTACT BLOCK : A switching element which is added singly or in groups to an operator to make a complete switch. Typically used with industrial controls (APEM A01 and A02 series).

CONTACT BOUNCE (Bounce) : The time during switching in which electrical instability (bounce) caused by the rebound of the contacts is observed. Relative mass of the contacts, forces and frequency of supporting members are all components that determine the extent of bounce. Total transfer time consists of the time for the contacts to close plus bounce. Transfer time should be rapid so natural bounce time is short.

CONTACT GAP : The distance between a stationary contact and a movable contact in the open position.

CONTACT RATING (Switching rating) : The capacity to switch (connect or interrupt) an electrical load.
Load characteristic (resistive, inductive, capacitive, power factor).
Contrast with non-switching rating.

CONTACT RESISTANCE : The resistance across the two closed contacts : contact interface and terminals.

CREEPAGE : The unwanted flow of electrical current from one conductive part to another.

CSA : Canadian Standard Association

CYCLE : The complete sequence of indexing through all successive switch positions and returning to the original position.

DC : Direct Current : electric current that flows only in one direction (see VDC).

DETENT : A mechanical stop that holds the contacts in a given position after the actuation force is removed or prevents the changing of contact position at less than a specified actuation force. Can also be referred to as tactile feel.

DIELECTRIC STRENGTH : The ability of an insulating material to withstand a voltage without arcing across its surface. The standard voltage that can be applied between two open terminals or between a terminal and ground without causing short. Most often applied to insulator between switch terminals and metal exposed to operator of the switch. Also known as Dielecric Withstanding Voltage, DWV, Leakage resistance, Breakdown Voltage.

DIFFERENTIAL TRAVEL : The distance an actuator moves between the point where contacts snap over and where they snap back, or when contact is made and then brakes.

DIP : DIP-in-line Package (in Europe also, DIL : Dual-in-line) refers to a component with two rows of PC terminals. The terminals are most commonly on a 0,100" pitch with 0,300" between rows.

DOUBLE-BREAK CONTACTS : A contact mechanism using two sets of contacts to make or break a given circuit. The contact gap opens twice as fast, reducing the arc duration, contact surface temperature and material erosion. This improves heat dissipation and provides better power handling capacity for a longer switch life. Typical of high power industrial switches and DC Circuit application. See Single-Break Contacts.

DP : Double pole. See pole.

DRY CIRCUIT : An application in which power level do not cause arcing melting, or softening of the contacts . Typically requires gold plated contacts for reliable switch operation. At such low levels, and since no arc occurs, silver contacts would not be self-cleaned and would be less reliable. Typical Definition : for ex. 0.4VA max. 20 V DC or peak AC max. Also known as "Low Energy", "Logic Level", TTL.

DWV : Dielectric Withstanding Voltage. See Dielectric Strength.

DT : Double Throw. See Throw.

Glossary

DUST TIGHT : Sealed switch will withstand sand and dust contamination.

ELECTRICAL LIFE : The number of operations at a given electrical load that does not result in a degradation of any electrical or mechanical parameter beyond the standard set by the applicable end-of-life criteria.

END OF LIFE CRITERIA : Those specifications that a switch must meet at the end of its specified electrical life. Typically contact resistance and/or heat rise of contacts at full rated load at end of life.

ENVIRONMENTAL SEAL : A seal that totally encapsulates the switch providing a specified level of protection against intrusion of solids, liquids or gases into the body of the device.

ESD : Electrostatic discharge.

FIXED CONTACT (Stationary contact) : The non-moving contact. Typically integral to the end of the terminal inside the switch body.

FLASH PLATING : A very thin or "instant" plating (usually less than 0.25 microns in thickness).

FLUX : Chemical used for cleaning metal surfaces for welding. Fluxes turn contaminated metal surfaces into clean, solderable part.

GOLD FLASH : A plating of gold typically less than 10 micro-inches (millionths) thick. Used only as a barrier to oxidation or corrosion of terminals to maintain solderability.

GULL WING : A type of surface mount terminal which extends from the side of the switch and has a L-shaped bend at its end (terminals are formed away from the switch body).

HEAT RISE : An indirect measurement of contact resistance used by rating agencies. The temperature rise over ambient of a contact set carrying a prescribed current is measured to determine whether it falls within safe limits.

IEC : International Electrotechnical Commission

IECQ : IEC's Quality Assessment system for Electronic Components, created in 1983 to facilitate national and international trade in certified electronic components. A worldwide certification system which provides a method whereby electronic components made and handled by approved manufacturers and distributors can be used anywhere without further testing.

INDUCTIVE LOAD : A load in which the initial current on making (closing) of the contacts is lower than steady state and rises slowly. On breaking (opening) of the contacts, the current is greater than steady state. The stored energy of the inductor provokes a long and severe arcing time. Current lags voltage in inductive loads. Motors are the most common inductive load. Inductive loads are the most troublesome of circuit conditions. See Resistive Load. Capacitive Load.

INFRARED REFLOW : A method of mass soldering Surface Mount Devices with Infra Red (IR) thermal radiation heating the PCB solder paste and components.

INRUSH : The initial transitory high-level of current at contact closing (making). A characteristic of capacitive and some resistive loads. The inrush currents can be large and long enough to cause severe degradation of the contacts. See Resistive Load. Capacitive Load. Power Factor.

INSERT MOLD : In switches and relays used to refer to terminations that are placed in the mold so that plastic is molded around the terminations. The chief benefit is an inherent seal against the intrusion of flux into the body of the device. Therefore no epoxy terminal seal is required.

INSULATION RESISTANCE : The electrical resistance between two normally insulated parts measured at a specified DC voltage.

IP : An industrial specification (Part of the IEC529 standard) used worldwide to indicate the degree of protection provided by components against accidental contact, penetration of solids or liquids into or through the component.See NEMA.

LAMP LOAD (Tungsten) : A load characterised by a high inrush current at make (approximately 10 to 16 times the steady state).

LATCHING ACTION : See alternate action (or push-push). Actuator position typically indicates contact position.

LEAKAGE BARRIER : A ridge or web molded into a switch housing between terminals or contacts to increase the surface distance between them.

LEAKAGE RESISTANCE : Dielectric strength

LED : Light Emitting Diode. Long life and low consumption illumination

LIFE : See Electrical life, Mechanical Life.

LOGIC LEVEL : Refers to power levels typical of solid state electronic circuits (TTL, CMOS, etc.). Levels at which no arcing, melting or softening of the contacts occur. Typically require gold contacts for reliability since no arcing occurs to self clean the contacts. See Dry circuit. Also referred to as low energy

LOW ENERGY : See Dry circuit.

MAINTAINED : A position of a switch which remains unchanged when actuation force is removed from switch actuator. Contrast with Momentary.

MAKE-BEFORE-BREAK (shorting, MBB) : Movable contacts make the next circuit before breaking the first circuit. Typically found in slide switches. Contrast with Break-before-make.

MAKE AND BREAK : Opening one circuit before completing another on the same pole

MECHANICAL LIFE : The number of operations of a switch without electrical load that does not result in a degradation of parameters beyond the standard set by the applicable end-of-life criteria.

MOISTURE PROOF : Sealed switch will withstand high humidity and limited exterior environment such as rain.

MOMENTARY ACTION : Mechanically returning from a temporary switch position to the normal switch position

MOVABLE CONTACT : The contact moved by the switch actuator into and away from contact with a fixed contact thus forming the electrical circuits possible for a given device.

NC : See Normally Closed

NEMA : National Electrical Manufacturers' Association. A US Standards setting group. For switch products most often applied to switches mounted in various enclosures offering specified degrees of protection against intrusion of liquids, dust, corrosive elements, etc. NEMA ratings are common in industrial or outdoor applications. See IP.

NO : See Normally Open.

NON-SHORTING : See Break-Before-Make

NON-SWITCHING RATING : The power carring capacity of a switch after contact closure and end of contact bounce. Typically far higher than the contact rating (switching rating) of a switch.

NORMALLY CLOSED (NC) : Normally closed contacts are closed when the switch actuator is in its unactuated position (e.g., the plunger is in the resting position in the case of a pushbutton switch).

NORMALLY OPEN (NO) : Normally open contacts are open when the switch actuator is in its unactuated or resting position.

OIL-TIGHT : A generic term for a panel seal (see) commonly used in industrial settings. Defined by NEMA (see) standard.

OPEN FRAME : Typical to slide switches ; open frame construction allows for automatic solder process and post solder cleaning. Contrast with "washable".

OPERATING FORCE : See Actuation Force.

OPERATING TEMPERATURE : The range of temperature within which the device may be used.

OPERATOR : A panel-mounted mechanical device (pushbutton, selector, keylock, etc.) without contacts to which one or more contact blocks may be added to make a complete switch (See APEM A01-A02 Series).

OVERTRAVEL : The distance the actuator may move between initial electrical contact position and the extreme mechanical position of the actuator. See Travel, Pretravel.

PANEL SEAL : A panel seal provides a defined level of protection against penetration of liquids through the switch and switch-to-panel interface to the rear of a panel.

PCB : Printed circuit board

POLE : Single common electrical input having one or more outputs. The number of seperate circuits that can be active through a switch at any one time. A single-pole switch allows one closed circuit at a time. A double-pole switch allows two closed circuits, etc.

POWER FACTOR (PF) : A measure of the inductive or capacitive character of an electrical load.

PRETRAVEL : The distance the actuator moves from a rest position (or free position) to electrical make at another position. See Travel, Overtravel.

PUSH-ON / PUSH-OFF : See Alternate Action.

PUSH-PUSH : See Alternate Action.

QUICK-CONNECT TERMINAL : Flat tab or blade style terminals designed to accept push-on female wire connectors (instead of soldering). The most popular sizes are : 0.250". 0.187". 0.110" wide.

RATING : See contact rating

RESISTIVE LOAD : Current and voltage are in steady state on opening or closing the switch. See capacitive load, Inductive load, Power factor, Inrush.

SEMKO : Svenska Elektriska Materielkontrollanstalten of Sweden

SEV : Schweizerischer Elektrotechnisher Verein of Switzerland

SHORTING CONTACT : Contacts which make-before-break.
See Make-before-Break

SILICON RUBBER : Rubber made from silicone elastomers which keeps its high level of flexibility, resilience and tensile strength over a wide temperature range.

SINGLE BREAK CONTACTS : A contact mechanism using one set of contacts to make or break a given circuit. Typical of electronic or low power switches.
See Double-Break Contacts.

SNAP ACTION : The fast transfer of contacts from one position to another, this action is rather independent of the speed of actuator travel

SPACING : See Clearance

SPDT : Single pole double throw. See Pole, See Throw.

SPLASHPROOF : Sealed switch will withstand heavy rain or stream of water. See Panel Seal.

SPRING RETURN : See momentary.

STORAGE TEMPERATURE : The range of temperature within which the device may be stored. Typically this is a wider range than operating temperature.

SURFACE MOUNT DEVICES (SMD) : Components that are compatible with surface mount PC board technology. Holes are not used for component mounting. Component leads are soldered to pads on the surface of the PC board (on the same side as the components). For switches, typically defined by surface mount terminations (e.g., J-Bend. L-Bend, butt, etc.) and compatibility with surface mount soldering (e.g., vapor phase reflow, infrared, etc.) and cleaning processes.

SURFACE MOUNT TECHNOLOGY (SMT) : See SMD

TACTILE FEEL (FEEDBACK) : The switching action felt by the operator of the switch (same as click action or positive action). Audible or "feel" snap or click that indicates contact movements.

TERMINAL : The metal portion of a switch, exterior to the body, that is used to connect the switch to an electrical circuit. Example : PC, wire lug, quick-connect, wire-wrap, etc.

THROW : The number of circuits that can be controlled by any one pole of a switch. Example : In a single-pole-double-throw (SPDT) switch, only one circuit may be completed at a time. However, there are two possible circuits (throws) that can be made.

TRANSLUCENT : Transmitting light so that objects lying beyond cannot be seen distinctly.

TRANSPARENT : Transmitting light so that objects lying beyond can be seen distinctly.

TRAVEL : The total distance the actuator can move. See Pretravel, Overtravel.

TWO CIRCUITS : A circuit in which one circuit is completed in one position and another separate circuit is completed in an other position.

UL : Underwriters laboratories Inc.

VAC : Voltage, alternating current (see AC)

VDC : Voltage, direct current (see DC)

VDE : Verband Deutscher Elektrotechniker of Germany

WASHABLE : Applied to PC board mounted devices indicating compatibility with cleaning processes used after soldering. No degradation of electrical or mechanical parameters occurs. The switch is sealed to keep contaminents out of the contact area.

WAVE SOLDERING : A method of soldering in which a wave of molten solder contacts the components on the PCB as the PC Board with the components is conveyed through the process.

WIPING ACTION : Sliding of contacts over one another resulting in cleaning of the contacts.

Addresses

UG1410A

MANUFACTURING AND SALES LOCATIONS

FRANCE
APEM - Headquarters
55, av. Edouard Herriot
BP 1
82303 Caussade Cedex
Tel.: (+33) 5 63 93 14 98
Fax: (+33) 5 63 93 19 03
e-mail:
commercial@apem.fr
www.apem.fr

ITALY
APEM ITALIA Srl
Via Marconi, 147G
12030 Marene (CN)
Tel.: (+39) 0172 74 31 70
Fax: (+39) 0172 74 31 71
e-mail:
apem.italia@apem.it
www.apem.it

UNITED KINGDOM
APEM COMPONENTS Ltd
Drakes Drive
Long Crendon,
Bucks HP18 9BA - England
Tel.: (+44) 1844 202400
Fax: (+44) 1844 202500
e-mail:
sales@apem.co.uk
www.apem.co.uk

UNITED STATES
APEM, INC.
63 Neck Road
Haverhill, MA 01835-8025
Tel.: (+1) 978 372 1602
Fax: (+1) 978 372 3534
e-mail: info@apem.com
www.apem.com

UNITED STATES
APEM, INC.
970 Park Center Drive
Vista, CA 92081-835
Tel.: (+1) 760 598 2518
fax: (+1) 760 598 2524
e-mail: info@apem.com
www.apem.com

SALES SUBSIDIARIES / OFFICES

BENELUX
APEM BENELUX nv/sa
Avenue Excelsiorlaan 21
1930 Zaventem - Belgium
Tel.: (+32) 2 725 05 00
Fax: (+32) 2 725 22 00
e-mail: sales@apemswitches.be
www.apemswitches.be

CHINA
APEM Ltd
Rong Guang Building, 602A
11, Changshun Road
200051 Shanghai
Tel. : (+86) 21 62 78 85 46
Fax : (+86) 21 62 08 82 09
e-mail : contact@apem.com.cn

GERMANY
APEM GmbH
Gewerbehof Giesing
Pauldorfferstrasse 34, 2. OG
81549 Munich
Tel.: (+49) 89 45 99 110
Fax: (+49) 89 48 10 39
e-mail: info@apem.de
www.apem.de

SWEDEN
APEM AB
Isafjordsgatan 35
16440 Kista
Tel.: (+46) 8 626 38 00
Fax: (+46) 8 626 82 49
e-mail: info@apem.se
www.apem.se

OTHER MANUFACTURING LOCATIONS

CHINA
APEM (WUJIN) ELECTRONIC CO.
Henglin Town, Wujin Dist. Changzhou
213101Jiangsu province

TUNISIA
SACEMA
6, rue des Pommiers
Route de la Mosquée Er-Raoudha
2036 La Soukra Ariana

DISTRIBUTION NETWORK

More than 130 distributors and agents on 5 continents.
Consult our websites: www.apem.com.

APEM

Other product ranges

Switch panels

APEM offers several switch panel technologies suitable for transportation, industrial, vending, military and other professional custom applications. APEM has expertise in designing and manufacturing membrane switch panels, stainless steel keyboards and complete custom interfaces incorporating switch solutions, illumination, shielding, housing, touch screens and associated electronics.

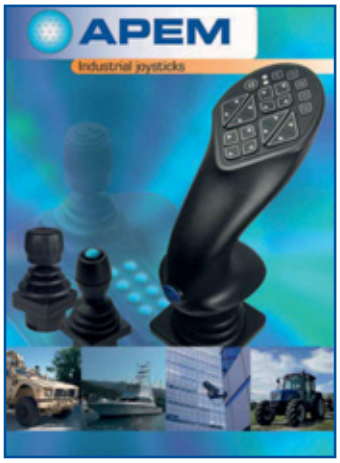

Joysticks

APEM manufactures joysticks for professional applications. Easy to operate and highly reliable, APEM joysticks are suitable for all size and shape requirements from thumb & finger operation to full hand grip products. Leading the market with new technologies and features, APEM joysticks are available with potentiometer, switch, inductive and hall effect sensing. All APEM joysticks are highly customisable and are offered with a large range of standard configurations and options.

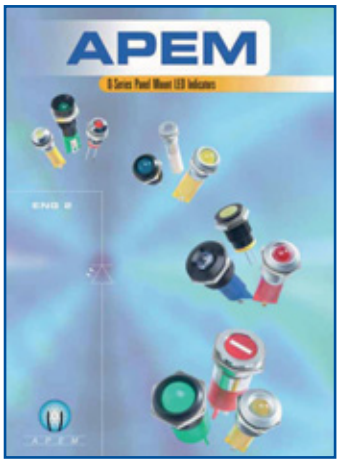

LED indicators

The Q series panel mount LED indicators complement the APEM range of products. This series comprises seven different diameters, from 6 mm to 22 mm. They are available with prominent, recessed and flush bezel styles, different bezel finishes, five LED colours, as well as bicolour, tricolour and flashing LEDs. Integral resistors permit direct connection to 6VDC, 12VDC, 24VDC, 110VAC and 220VAC.

Catalogues on line and on request
www.apem.com

APEM

THE BROADEST RANGE OF HMI SOLUTIONS

OTHER PRODUCT RANGES

JOYSTICKS

SWITCH PANELS

LED INDICATORS

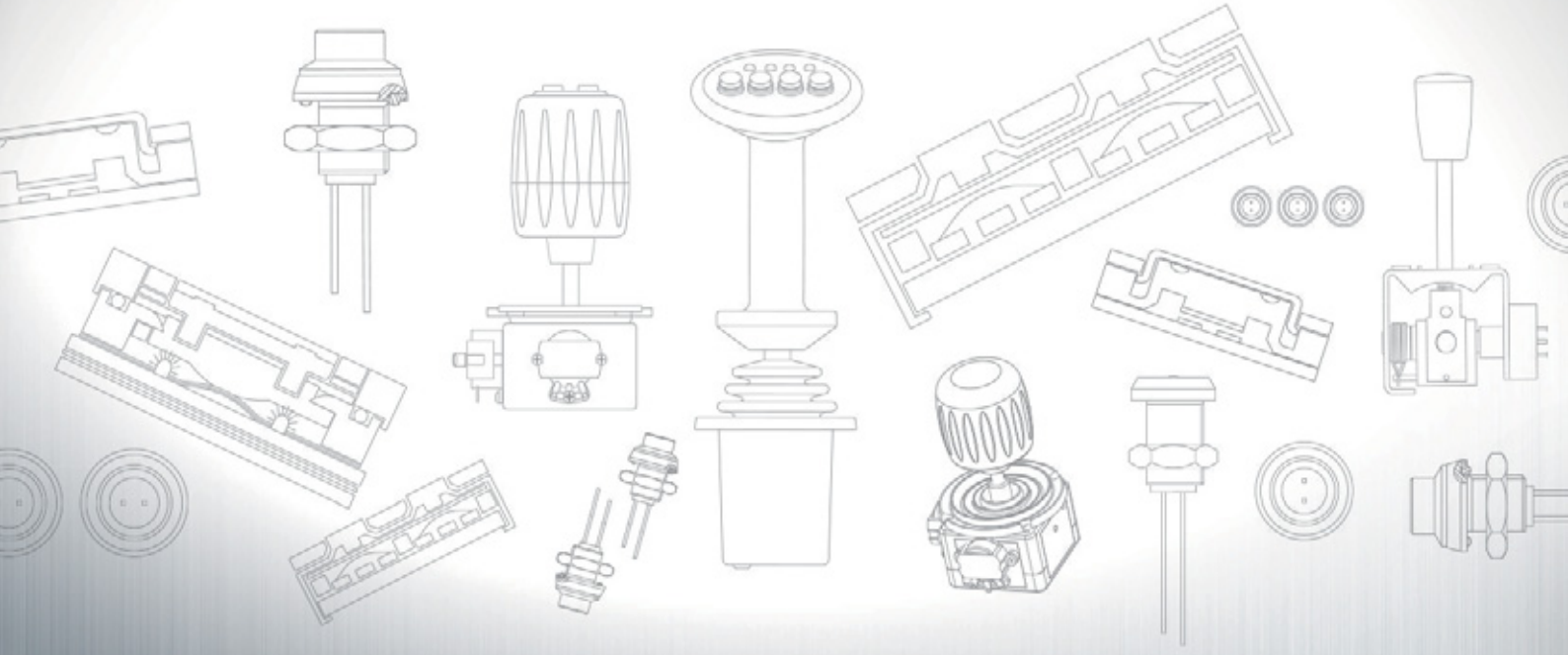

www.apem.com

Designed by couleur-citron.com UG1410A