TEXAS INSTRUMENTS

TVP5147PFP

NTSC/PAL/SECAM 2×10-Bit Digital Video Decoder With Macrovision™ Detection, YPbPr Inputs, and 5-Line Comb Filter

Data Manual

March 2007

Digital Audio Video

SLES099C

Contents

Section *Page*

1 Introduction 1
1.1 Detailed Functionality 2
1.2 TVP5147 Applications 3
1.3 Related Products 3
1.4 Ordering Information 3
1.5 Functional Block Diagram 4
1.6 Terminal Assignments 5
1.7 Terminal Functions 6
2 Functional Description 9
2.1 Analog Processing and A/D Converters 9
2.1.1 Video Input Switch Control 9
2.1.2 Analog Input Clamping 10
2.1.3 Automatic Gain Control 10
2.1.4 Analog Video Output 10
2.1.5 A/D Converters 10
2.2 Digital Video Processing 11
2.2.1 2× Decimation Filter 11
2.2.2 Composite Processor 11
2.2.3 Luminance Processing 15
2.3 Clock Circuits 16
2.4 Real-Time Control (RTC) 17
2.5 Output Formatter 17
2.5.1 Separate Syncs 19
2.5.2 Embedded Syncs 23
2.6 I^2C Host Interface 23
2.6.1 Reset and I^2C Bus Address Selection 24
2.6.2 I^2C Operation 24
2.6.3 VBUS Access 24
2.7 VBI Data Processor 26
2.7.1 VBI FIFO and Ancillary Data in Video Stream 27
2.7.2 VBI Raw Data Output 28
2.8 Reset and Initialization 28
2.9 Adjusting External Syncs 29
2.10 Internal Control Registers 29
2.11 Register Definitions 34
2.11.1 Input Select Register 34
2.11.2 AFE Gain Control Register 35
2.11.3 Video Standard Register 35
2.11.4 Operation Mode Register 36
2.11.5 Autoswitch Mask Register 36
2.11.6 Color Killer Register 37
2.11.7 Luminance Processing Control 1 Register 37
2.11.8 Luminance Processing Control 2 Register 38
2.11.9 Luminance Processing Control 3 Register 38
2.11.10 Luminance Brightness Register 38
2.11.11 Luminance Contrast Register 39

2.11.12 Chrominance Saturation Register 39
2.11.13 Chroma Hue Register 39
2.11.14 Chrominance Processing Control 1 Register 39
2.11.15 Chrominance Processing Control 2 Register 40
2.11.16 AVID Start Pixel Register 40
2.11.17 AVID Stop Pixel Register 41
2.11.18 HSYNC Start Pixel Register 41
2.11.19 HSYNC Stop Pixel Register 41
2.11.20 VSYNC Start Line Register 41
2.11.21 VSYNC Stop Line Register 42
2.11.22 VBLK Start Line Register 42
2.11.23 VBLK Stop Line Register 42
2.11.24 CTI Delay Register 42
2.11.25 CTI Control Register 43
2.11.26 RTC Register 43
2.11.27 Sync Control Register 44
2.11.28 Output Formatter 1 Register 44
2.11.29 Output Formatter 2 Register 45
2.11.30 Output Formatter 3 Register 45
2.11.31 Output Formatter 4 Register 46
2.11.32 Output Formatter 5 Register 47
2.11.33 Output Formatter 6 Register 48
2.11.34 Clear Lost Lock Detect Register 48
2.11.35 Status 1 Register 49
2.11.36 Status 2 Register 50
2.11.37 AGC Gain Status Register 50
2.11.38 Video Standard Status Register 51
2.11.39 GPIO Input 1 Register 51
2.11.40 GPIO Input 2 Register 52
2.11.41 Vertical Line Count Register 52
2.11.42 AFE Coarse Gain for CH 1 Register 53
2.11.43 AFE Coarse Gain for CH 2 Register 53
2.11.44 AFE Coarse Gain for CH 3 Register 54
2.11.45 AFE Coarse Gain for CH 4 Register 54
2.11.46 AFE Fine Gain for Pb Register 55
2.11.47 AFE Fine Gain for Y_G_Chroma Register 55
2.11.48 AFE Fine Gain for Pr Register 55
2.11.49 AFE Fine Gain for CVBS_Luma Register 56
2.11.50 Field ID Control Register 56
2.11.51 ROM Version Register 56
2.11.52 AGC White Peak Processing Register 57
2.11.53 F and V Bit Control Register 58
2.11.54 VCR Trick Mode Control Register 59
2.11.55 Horizontal Shake Increment Register 59
2.11.56 AGC Increment Speed Register 59
2.11.57 AGC Increment Delay Register 59
2.11.58 Analog Output Control 1 Register 60
2.11.59 Chip ID MSB Register 60
2.11.60 Chip ID LSB Register 60

2.11.61 VDP TTX Filter And Mask Registers . . . 60
2.11.62 VDP TTX Filter Control Register . . . 61
2.11.63 VDP FIFO Word Count Register . . . 62
2.11.64 VDP FIFO Interrupt Threshold Register . . . 63
2.11.65 VDP FIFO Reset Register . . . 63
2.11.66 VDP FIFO Output Control Register . . . 63
2.11.67 VDP Line Number Interrupt Register . . . 63
2.11.68 VDP Pixel Alignment Register . . . 64
2.11.69 VDP Line Start Register . . . 64
2.11.70 VDP Line Stop Register . . . 64
2.11.71 VDP Global Line Mode Register . . . 64
2.11.72 VDP Full Field Enable Register . . . 65
2.11.73 VDP Full Field Mode Register . . . 65
2.11.74 VBUS Data Access With No VBUS Address Increment Register . . . 65
2.11.75 VBUS Data Access With VBUS Address Increment Register . . . 65
2.11.76 FIFO Read Data Register . . . 65
2.11.77 VBUS Address Access Register . . . 66
2.11.78 Interrupt Raw Status 0 Register . . . 66
2.11.79 Interrupt Raw Status 1 Register . . . 67
2.11.80 Interrupt Status 0 Register . . . 67
2.11.81 Interrupt Status 1 Register . . . 68
2.11.82 Interrupt Mask 0 Register . . . 69
2.11.83 Interrupt Mask 1 Register . . . 70
2.11.84 Interrupt Clear 0 Register . . . 70
2.11.85 Interrupt Clear 1 Register . . . 71
2.12 VBUS Register Definitions . . . 72
2.12.1 VDP Closed Caption Data Register . . . 72
2.12.2 VDP WSS Data Register . . . 72
2.12.3 VDP VITC Data Register . . . 73
2.12.4 VDP V-Chip TV Rating Block 1 Register . . . 73
2.12.5 VDP V-Chip TV Rating Block 2 Register . . . 73
2.12.6 VDP V-Chip TV Rating Block 3 Register . . . 74
2.12.7 VDP V-CHIP MPAA Rating Data Register . . . 74
2.12.8 VDP General Line Mode and Line Address Register . . . 75
2.12.9 VDP VPS/Gemstar Data Register . . . 76
2.12.10 Analog Output Control 2 Register . . . 77
2.12.11 Interrupt Configuration Register . . . 77
3 Electrical Specifications . . . 79
3.1 Absolute Maximum Ratings . . . 79
3.2 Recommended Operating Conditions . . . 79
3.2.1 Crystal Specifications . . . 79
3.3 Electrical Characteristics . . . 80
3.3.1 DC Electrical Characteristics . . . 80
3.3.2 Analog Processing and A/D Converters . . . 80
3.3.3 Timing . . . 81
4 Example Register Settings . . . 83
4.1 Example 1 . . . 83
4.1.1 Assumptions . . . 83
4.1.2 Recommended Settings . . . 83

4.2 Example 2 83
4.2.1 Assumptions 83
4.2.2 Recommended Settings 83
4.3 Example 3 84
4.3.1 Assumptions 84
4.3.2 Recommended Settings 84
5 Application Information 87
5.1 Application Example 87
5.2 Designing With PowerPAD™ Devices 88

List of Illustrations

Figure *Title* *Page*
1–1 Functional Block Diagram 4
1–2 Terminal Assignments Diagram 5
2–1 Analog Processors and A/D Converters 9
2–2 Digital Video Processing Block Diagram 11
2–3 Composite and S-Video Processing Block Diagram 12
2–4 Color Low-Pass Filter Frequency Response 13
2–5 Color Low-Pass Filter With Filter Frequency Response, NTSC Square Pixel Sampling 13
2–6 Color Low-Pass Filter With Filter Characteristics, NTSC/PAL ITU-R BT.601 Sampling 13
2–7 Color Low-Pass Filter With Filter Characteristics, PAL Square Pixel Sampling 13
2–8 Chroma Trap Filter Frequency Response, NTSC Square Pixel Sampling 14
2–9 Chroma Trap Filter Frequency Response, NTSC ITU-R BT.601 Sampling 14
2–10 Chroma Trap Filter Frequency Response, PAL ITU-R BT.601 Sampling 14
2–11 Chroma Trap Filter Frequency Response, PAL Square Pixel Sampling 14
2–12 Luminance Edge-Enhancer Peaking Block Diagram 15
2–13 Peaking Filter Response, NTSC Square Pixel Sampling 15
2–14 Peaking Filter Response, NTSC/PAL ITU-R BT.601 Sampling 15
2–15 Peaking Filter Response, PAL Square Pixel Sampling 16
2–16 Reference Clock Configurations 16
2–17 RTC Timing 17
2–18 Vertical Synchronization Signals for 525-Line System 19
2–19 Vertical Synchronization Signals for 625-Line System 20
2–20 Horizontal Synchronization Signals for 10-Bit 4:2:2 Mode 21
2–21 Horizontal Synchronization Signals for 20-Bit 4:2:2 Mode 22
2–22 VSYNC Position With Respect to HSYNC 23
2–23 VBUS Access 25
2–24 Reset Timing 28
2–25 Teletext Filter Function 62
3–1 Clocks, Video Data, and Sync Timing 81
3–2 I^2C Host Port Timing 81
5–1 Example Application Circuit 87

List of Tables

Table *Title* *Page*
1–1 Terminal Functions 6

2–1 Output Format 18
2–2 Summary of Line Frequencies, Data Rates, and Pixel/Line Counts 18
2–3 EAV and SAV Sequence 23
2–4 I^2C Host Interface Terminal Description 24
2–5 I^2C Address Selection 24
2–6 Supported VBI System 26
2–7 Ancillary Data Format and Sequence 27
2–8 VBI Raw Data Output Format 28
2–9 Reset Sequence 28
2–10 I^2C Register Summary 30
2–11 VBUS Register Summary 33
2–12 Analog Channel and Video Mode Selection 34

1 Introduction

The TVP5147 device is a high-quality, single-chip digital video decoder that digitizes and decodes all popular baseband analog video formats into digital component video. The TVP5147 decoder supports the analog-to-digital (A/D) conversion of component YPbPr signals, as well as the A/D conversion and decoding of NTSC, PAL, and SECAM composite and S-video into component YCbCr. This decoder includes two 10-bit 30-MSPS A/D converters (ADCs). Preceding each ADC in the device, the corresponding analog channel contains an analog circuit that clamps the input to a reference voltage and applies a programmable gain and offset. A total of 10 video input terminals can be configured to a combination of YPbPr, CVBS, or S-video video inputs.

Composite or S-video signals are sampled at 2× the square-pixel or ITU-R BT.601 clock frequency, line-locked alignment, and are then decimated to the 1× pixel rate. CVBS decoding uses five-line adaptive comb filtering for both the luma and chroma data paths to reduce both cross-luma and cross-chroma artifacts. A chroma trap filter is also available. On CVBS and S-video inputs, the user can control video characteristics such as contrast, brightness, saturation, and hue via an I^2C host port interface. Furthermore, luma peaking (sharpness) with programmable gain is included, as well as a patented chroma transient improvement (CTI) circuit.

The following output formats can be selected: 20-bit 4:2:2 YCbCr or 10-bit 4:2:2 YCbCr.

The TVP5147 decoder generates synchronization, blanking, field, active video window, horizontal and vertical syncs, clock, genlock (for downstream video encoder synchronization), host CPU interrupt and programmable logic I/O signals, in addition to digital video outputs.

The TVP5147 decoder includes methods for advanced vertical blanking interval (VBI) data retrieval. The VBI data processor (VDP) slices, parses, and performs error checking on teletext, closed caption (CC), and other VBI data. A built-in FIFO stores up to 11 lines of teletext data, and with proper host port synchronization, full-screen teletext retrieval is possible. The TVP5147 decoder can pass through the output formatter 2× sampled raw luma data for host-based VBI processing.

The main blocks of the TVP5147 decoder include:

- Robust sync detection for weak and noisy signals as well as VCR trick modes
- Y/C separation by 2-D 5-line adaptive comb or chroma trap filter
- Two 10-bit, 30-MSPS A/D converters with analog preprocessors [clamp and automatic gain control (AGC)]
- Analog video output
- Luminance processor
- Chrominance processor
- Clock/timing processor and power-down control
- Software-controlled power-saving standby mode
- Output formatter
- I^2C host port interface
- VBI data processor
- Macrovision™ copy protection detection circuit (Type 1, 2, 3, and separate color stripe detection)
- 3.3-V tolerant digital I/O ports

Macrovision is a trademark of Macrovision Corporation.
Other trademarks are the property of their respective owners.

1.1 Detailed Functionality

- Two 30-MSPS, 10-bit A/D channels with programmable gain control
- Supports NTSC (J, M, 4.43), PAL (B, D, G, H, I, M, N, Nc, 60) and SECAM (B, D, G, K, K1, L) CVBS, and S-video
- Supports analog component YPbPr video format with embedded sync
- 10 analog video input terminals for multisource connection
- Supports analog video output
- User-programmable video output formats
  - 10-bit ITU-R BT.656 4:2:2 YCbCr with embedded syncs
  - 10-bit 4:2:2 YCbCr with separate syncs
  - 20-bit 4:2:2 YCbCr with separate syncs
  - 2× sampled raw VBI data in active video during a vertical blanking period
  - Sliced VBI data during a vertical blanking period or active video period (full field mode)
- HSYNC/VSYNC outputs with programmable position, polarity, width, and field ID (FID) output
- Composite and S-video processing
  - Adaptive 2-D 5-line adaptive comb filter for composite video inputs; chroma-trap available
  - Automatic video standard detection (NTSC/PAL/SECAM) and switching
  - Luma-peaking with programmable gain
  - Patented chroma transient improvement (CTI)
  - Patented architecture for locking to weak, noisy, or unstable signals
  - Single 14.31818-MHz reference crystal for all standards (ITU-R.BT601 and square pixel sampling)
  - Line-locked internal pixel sampling clock generation with horizontal and vertical lock signal outputs
  - Genlock output RTC format for downstream video encoder synchronization
- Certified Macrovision™ copy protection detection

- VBI data processor
  - Teletext (NABTS, WST)
  - CC and extended data service (EDS)
  - Wide screen signaling (WSS)
  - Copy generation management system (CGMS)
  - Video program system (VPS/PDC)
  - Vertical interval time code (VITC)
  - Gemstar™ 1×/2× mode
  - V-Chip decoding
  - Register readback of CC, WSS (CGMS), VPS/PDC, VITC and Gemstar 1×/2× sliced data
- I^2C host port interface
- Reduced power consumption: 1.8-V digital core, 3.3-V for digital I/O, and 1.8-V/3.3 V analog core with power-save and power-down modes
- 80-terminal TQFP PowerPAD™ package

1.2 TVP5147 Applications

- DLP projectors
- Digital TV
- LCD TV/monitors
- DVD recorders
- PVR
- PC video cards
- Video capture/video editing
- Video conferencing

1.3 Related Products

- *TVP5146 NTSC/PAL/SECAM 2×10-Bit Digital VIdeo Decoder With Macrovision™ Detection, YPbPr/RGB Inputs, and 5-Line Comb Filter* (SLES084)
- *TVP5150A Ultralow Power NTSC/PAL/SECAM Video Decoder With Robust Sync Detector* (SLES087)

1.4 Ordering Information

T_A	PACKAGED DEVICES
	80-TERMINAL PLASTIC FLAT-PACK PowerPAD™ PACKAGE
0°C to 70°C	TVP5147PFP

Gemstar is a trademark of Gemstar-TV Guide International.
PowerPAD is a trademark of Texas Instruments.

1.5 Functional Block Diagram

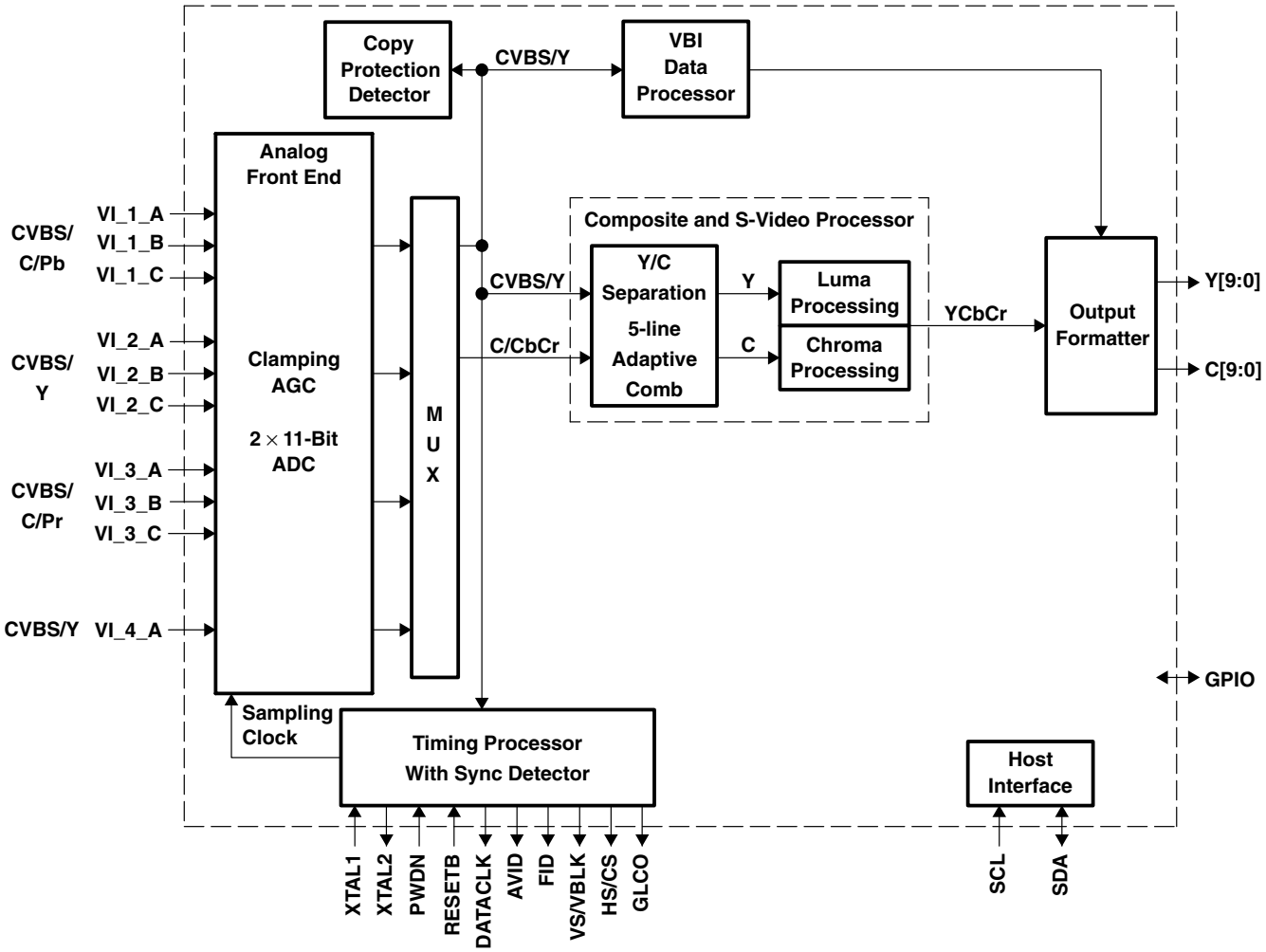

Figure 1–1. Functional Block Diagram

1.6 Terminal Assignments

PFP PACKAGE
(TOP VIEW)

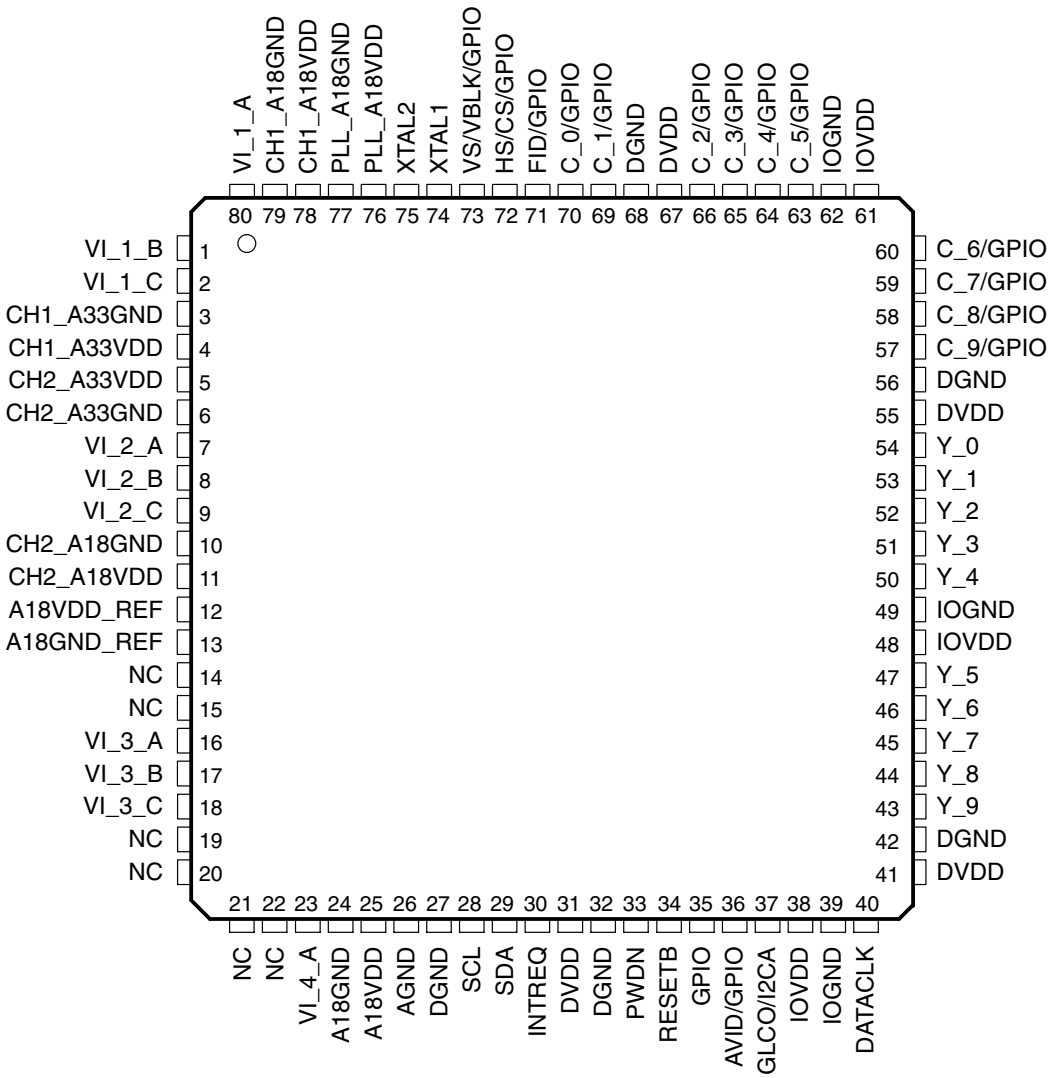

Figure 1–2. Terminal Assignments Diagram

1.7 Terminal Functions

Table 1–1. Terminal Functions

TERMINAL NAME	TERMINAL NUMBER	I/O	DESCRIPTION
Analog Video			
VI_1_A VI_1_B VI_1_C VI_2_A VI_2_B VI_2_C VI_3_A VI_3_B VI_3_C VI_4_A	80 1 2 7 8 9 16 17 18 23	I/O I I I I I I I I I	VI_1_A: Analog video input for CVBS/Pb/C or analog video output (see Section 2.11.58) VI_1_x: Analog video input for CVBS/Pb/C VI_2_x: Analog video input for CVBS/Y VI_3_x: Analog video input for CVBS/Pr/C VI_4_A: Analog video input for CVBS/Y Up to 10 composite, 4 S-video, and 2 composite or 3 component video inputs (or a combination thereof) can be supported. The inputs must be ac-coupled. The recommended coupling capacitor is 0.1 μF. The possible input configurations are listed in the input select register at I²C subaddress 00h (see Section 2.11.1).
Clock Signals			
DATACLK	40	O	Line-locked data output clock
XTAL1	74	I	External clock reference input. It can be connected to an external oscillator with a 1.8-V compatible clock signal or a 14.31818-MHz crystal oscillator.
XTAL2	75	O	External clock reference output. Not connected if XTAL1 is driven by an external single-ended oscillator.
Digital Video			
C_[9:0]/ GPIO[9:0]	57, 58, 59, 60, 63, 64, 65, 66, 69, 70	I/O	Digital video output of CbCr, C[9] is MSB and C[0] is LSB. Also, these terminals can be programmable general-purpose I/O. For the 8-bit mode, the two LSBs are ignored. Unused outputs can be left unconnected. The C_1 terminal needs a pulldown resistor (see Figure 5–1).
Y[9:0]	43, 44, 45, 46, 47, 50, 51, 52, 53, 54	O	Digital video output of Y/YCbCr, Y[9] is MSB and Y[0] is LSB. For the 8-bit mode, the two LSBs are ignored. Unused outputs can be left unconnected.
Miscellaneous Signals			
GPIO	35	I/O	Programmable general-purpose I/O
GLCO/I2CA	37	I/O	Genlock control output (GLCO) uses real time control (RTC) format. During reset, this terminal is an input used to program the I²C address LSB.
INTREQ	30	O	Interrupt request
NC	14, 15, 19, 20, 21, 22		Not connected. These terminals can be connected to power or ground (compatible with TVP5146 terminals), internally floating.
PWDN	33	I	Power down input: 1 = Power down 0 = Normal mode
RESETB	34	I	Reset input, active low (see Section 2.8)
Host Interface			
SCL	28	I	I²C clock input
SDA	29	I/O	I²C data bus

Table 1–1. Terminal Functions (Continued)

TERMINAL NAME	TERMINAL NUMBER	I/O	DESCRIPTION
Power Supplies			
AGND	26		Analog ground. Connect to analog ground.
A18GND_REF	13		Analog 1.8-V return
A18VDD_REF	12		Analog power for reference 1.8 V
CH1_A18GND CH2_A18GND A18GND	79 10 24		Analog 1.8-V return
CH1_A18VDD CH2_A18VDD A18VDD	78 11 25		Analog power. Connect to 1.8 V.
CH1_A33GND CH2_A33GND	3 6		Analog 3.3-V return
CH1_A33VDD CH2_A33VDD	4 5		Analog power. Connect to 3.3 V.
DGND	27, 32, 42, 56, 68		Digital return
DVDD	31, 41, 55, 67		Digital power. Connect to 1.8 V.
IOGND	39, 49, 62		Digital power return
IOVDD	38, 48, 61		Digital power. Connect to 3.3 V or less for reduced noise.
PLL_A18GND	77		Analog power return
PLL_A18VDD	76		Analog power. Connect to 1.8 V.
Sync Signals			
HS/CS/GPIO	72	I/O	Horizontal sync output or digital composite sync output Programmable general-purpose I/O
VS/VBLK/GPIO	73	I/O	Vertical sync output (for modes with dedicated VSYNC) or VBLK output Programmable general-purpose I/O
FID/GPIO	71	I/O	Odd/even field indicator output. This terminal needs a pulldown resistor (see Figure 5–1). Programmable general-purpose I/O
AVID/GPIO	36	I/O	Active video indicator output Programmable general-purpose I/O

2 Functional Description

2.1 Analog Processing and A/D Converters

Figure 2–1 shows a functional diagram of the analog processors and A/D converters, which provide the analog interface to all video inputs. It accepts up to 10 inputs and performs source selection, video clamping, video amplification, A/D conversion, and gain and offset adjustments to center the digitized video signal. The TVP5147 supports one analog video output for the selected analog input video.

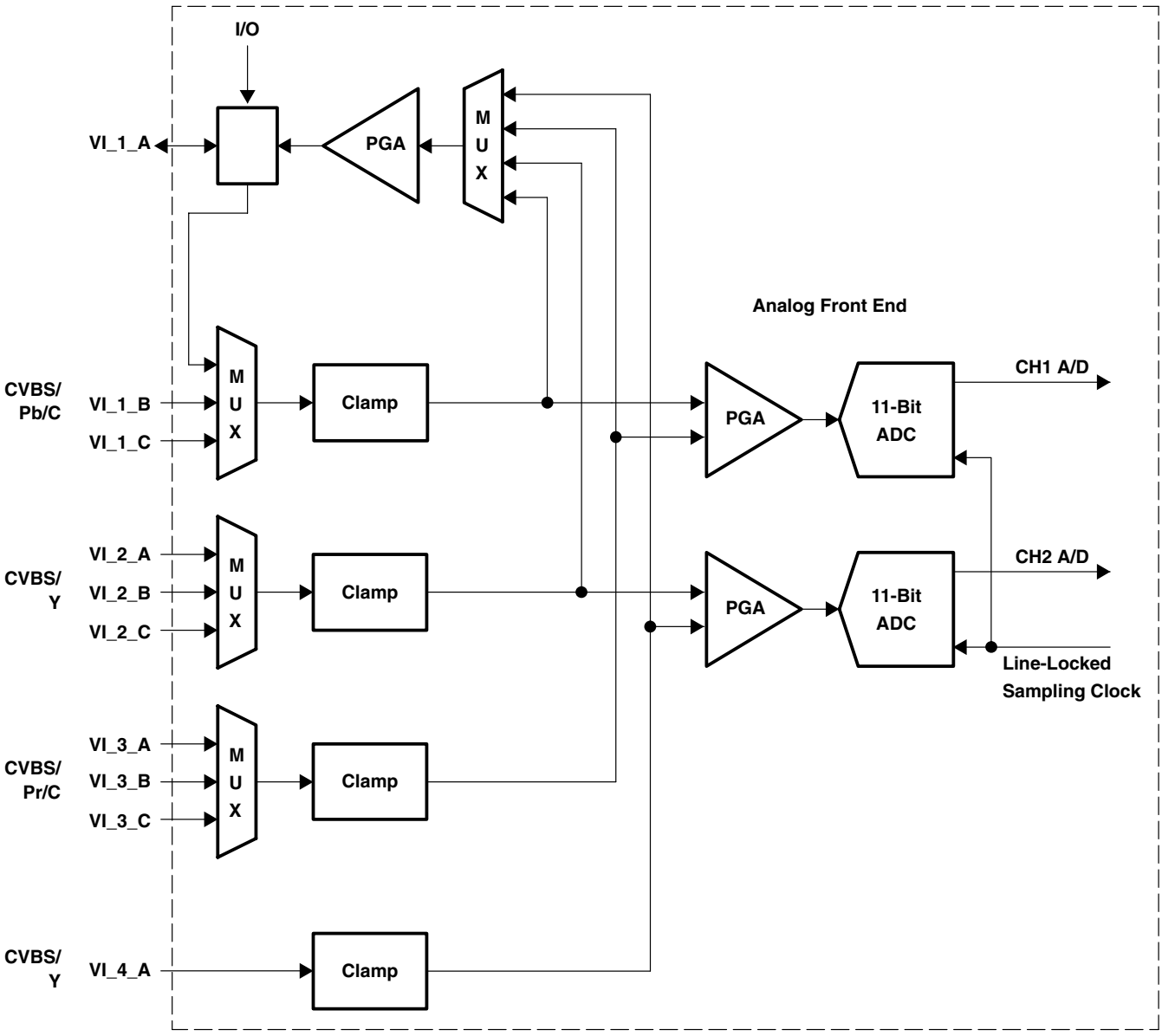

Figure 2–1. Analog Processors and A/D Converters

2.1.1 Video Input Switch Control

The TVP5147 decoder has two analog channels that accept up to 10 video inputs. The user can configure the internal analog video switches via the I^2C interface. The 10 analog video inputs can be used for different input configurations, some of which are:

- Up to 10 selectable individual composite video inputs
- Up to four selectable S-video inputs
- Up to three selectable analog YPbPr video inputs and one CVBS input
- Up to two selectable analog YPbPr video inputs, two S-video inputs, and two CVBS inputs

The input selection is performed by the input select register at I^2C subaddress 00h (see Section 2.11.1).

2.1.2 Analog Input Clamping

An internal clamping circuit restores the ac-coupled video signal to a fixed dc level. The clamping circuit provides line-by-line restoration of the video sync level to a fixed dc reference voltage. The selection between bottom and mid clamp is performed automatically by the TVP5147 decoder.

2.1.3 Automatic Gain Control

The TVP5147 decoder uses two programmable gain amplifiers (PGAs), one per channel. The PGA can scale a signal with a voltage-input compliance of 0.5-V_{PP} to 2.0-V_{PP} to a full-scale 10-bit A/D output code range. A 4-bit code sets the coarse gain with individual adjustment per channel. Minimum gain corresponds to a code 0x0 (2.0-V_{PP} full-scale input, –6-dB gain) while maximum gain corresponds to code 0xF (0.5 V_{PP} full scale, +6-dB gain). The TVP5147 decoder also has 12-bit fine gain controls for each channel and applies independently to coarse gain controls. For composite video, the input video signal amplitude can vary significantly from the nominal level of 1 V_{PP}. The TVP5147 decoder can adjust its PGA setting automatically: an automatic gain control (AGC) can be enabled and can adjust the signal amplitude such that the maximum range of the ADC is reached without clipping. Some nonstandard video signals contain peak white levels that saturate the ADC. In these cases, the AGC automatically cuts back gain to avoid clipping. If the AGC is on, then the TVP5147 decoder can read the gain currently being used.

The TVP5147 AGC comprises the front-end AGC before Y/C separation and the back-end AGC after Y/C separation. The back-end AGC restores the optimum system gain whenever an amplitude reference such as the composite peak (which is only relevant before Y/C separation) forces the front-end AGC to set the gain too low. The front-end and back-end AGC algorithms can use up to four amplitude references: sync height, color burst amplitude, composite peak, and luma peak.

The specific amplitude references being used by the front-end and back-end AGC algorithms can be independently controlled using the AGC white peak processing register located at subaddress 74h. The TVP5147 gain increment speed and gain increment delay can be controlled using the AGC increment speed register located at subaddress 78h and the AGC increment delay register located at subaddress 79h.

2.1.4 Analog Video Output

One of the analog input signals is available at the analog video output terminal, which is shared with input selected by I^2C registers. The signal at this terminal must be buffered by a source follower. The nominal output voltage is 2 V p-p, thus the signal can be used to drive a 75-Ω line. The magnitude is maintained with an AGC in 16 steps controlled by the TVP5147 decoder. In order to use this function, terminal VI_1_A must be set as an output terminal. The input mode selection register also selects an active analog output signal.

2.1.5 A/D Converters

All ADCs have a resolution of 10 bits and can operate up to 30 MSPS. All A/D channels receive an identical clock from the on-chip phase-locked loop (PLL) at a frequency between 24 MHz and 30 MHz. All ADC reference voltages are generated internally.

2.2 Digital Video Processing

Figure 2–2 is a block diagram of the TVP5147 digital video decoder processing. This block receives digitized video signals from the ADCs and performs composite processing for CVBS and S-video inputs and YCbCr signal enhancements for CVBS and S-video inputs. It also generates horizontal and vertical syncs and other output control signals such as genlock for CVBS and S-video inputs. Additionally, it can provide field identification, horizontal and vertical lock, vertical blanking, and active video window indication signals. The digital data output can be programmed to two formats: 20-bit 4:2:2 with external syncs or 10-bit 4:2:2 with embedded/separate syncs. The circuit detects pseudosync pulses, AGC pulses, and color striping in Macrovision-encoded copy-protected material. Information present in the VBI interval can be retrieved and either inserted in the ITU-R BT.656 output as ancillary data or stored in internal FIFO and/or registers for retrieval via the host port interface.

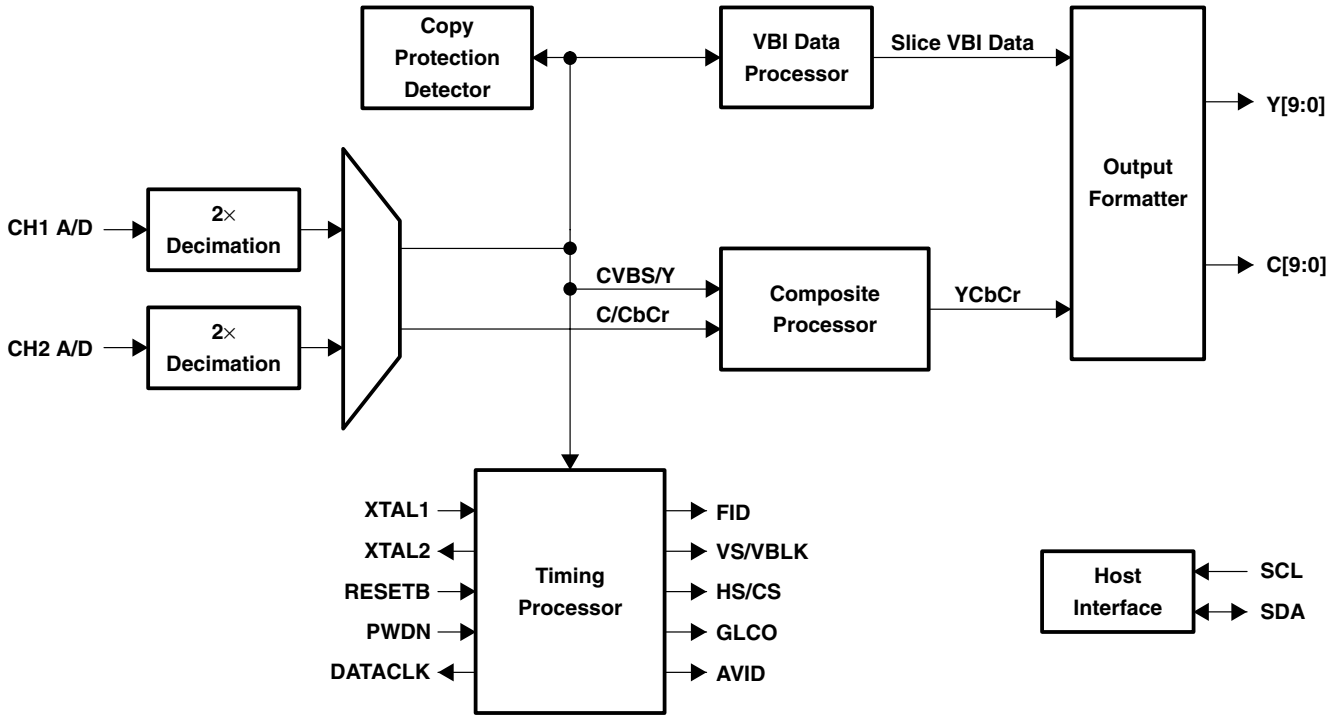

Figure 2–2. Digital Video Processing Block Diagram

2.2.1 2× Decimation Filter

All input signals are typically oversampled by a factor of 2 (27 MHz). The A/D outputs initially pass through decimation filters that reduce the data rate to 1× the pixel rate. The decimation filter is a half-band filter. Oversampling and decimation filtering can effectively increase the overall signal-to-noise ratio by 3 dB.

2.2.2 Composite Processor

Figure 2–3 is a block diagram of the TVP5147 digital composite video processing circuit. This processing circuit receives a digitized composite or S-video signal from the ADCs and performs Y/C separation (bypassed for S-video input), chroma demodulation for PAL/NTSC and SECAM, and YUV signal enhancements.

The 10-bit composite video is multiplied by the subcarrier signals in the quadrature demodulator to generate color difference signals U and V. The U and V signals are then sent to low-pass filters to achieve the desired bandwidth. An adaptive 5-line comb filter separates UV from Y based on the unique property of color phase shifts from line to line. The chroma is remodulated through a quadrature modulator and subtracted from line-delayed composite video to generate luma. This form of Y/C separation is completely complementary, thus there is no loss of information. However, in some applications, it is desirable to limit the U/V bandwidth to avoid crosstalk. In that case, notch filters can be turned on. To accommodate some viewing preferences, a peaking filter is also available in the luma path. Contrast, brightness, sharpness, hue, and saturation controls are programmable through the host port.

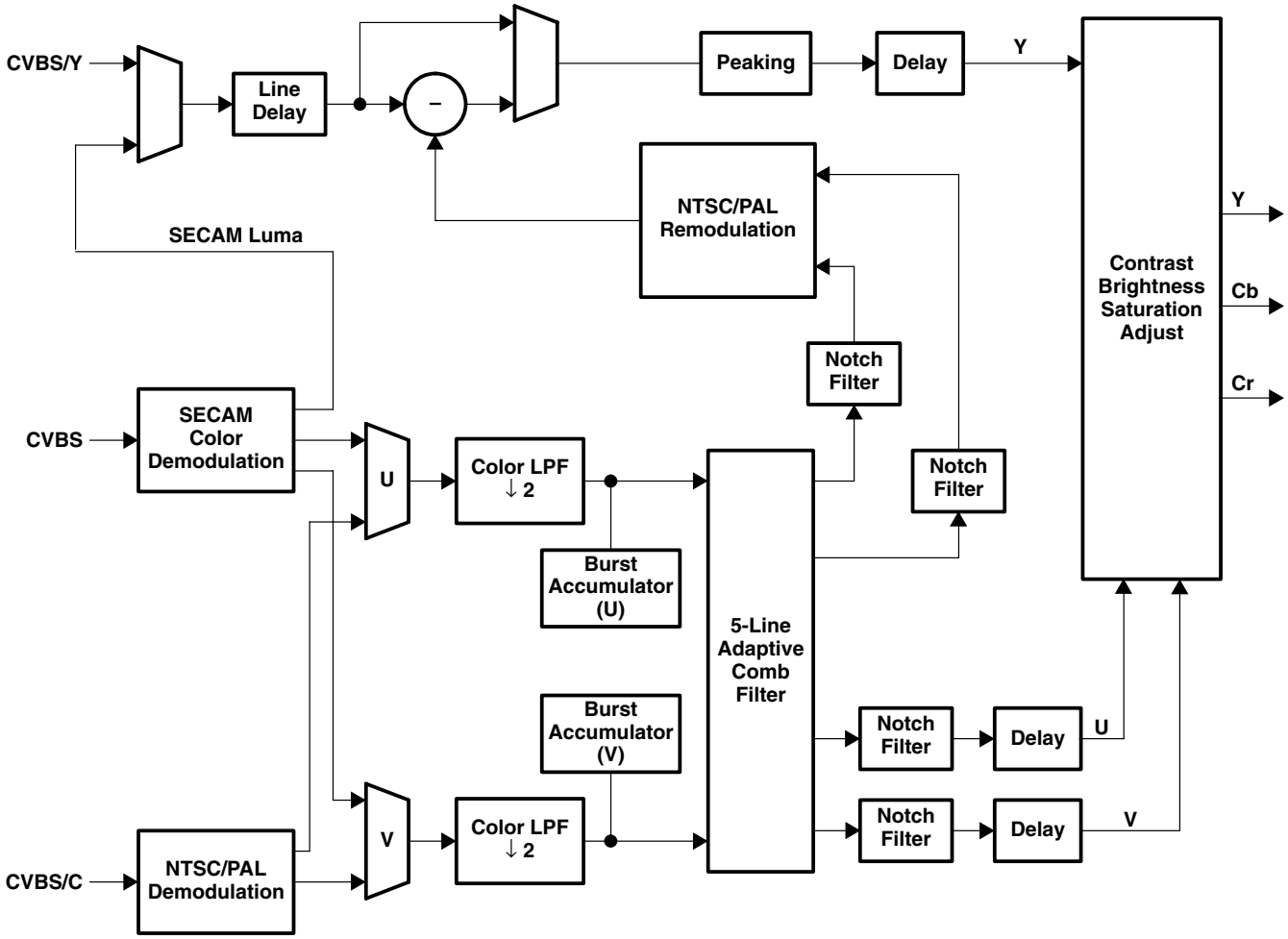

Figure 2–3. Composite and S-Video Processing Block Diagram

2.2.2.1 Color Low-Pass Filter

High filter bandwidth preserves sharp color transitions and produces crisp color boundaries. However, for nonstandard video sources that have asymmetrical U and V side bands, it is desirable to limit the filter bandwidth to avoid UV crosstalk. The color low-pass filter bandwidth is programmable to enable one of the three notch filters. Figure 2–4 through Figure 2–7 represent the frequency responses of the wideband color low-pass filters.

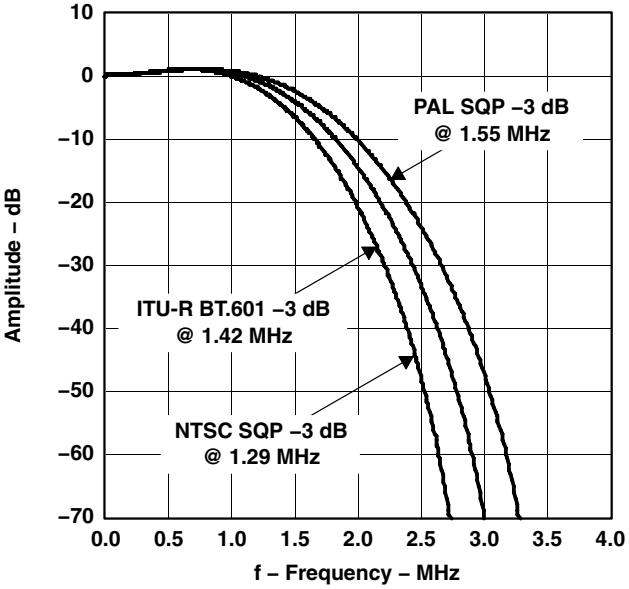

Figure 2–4. Color Low-Pass Filter Frequency Response

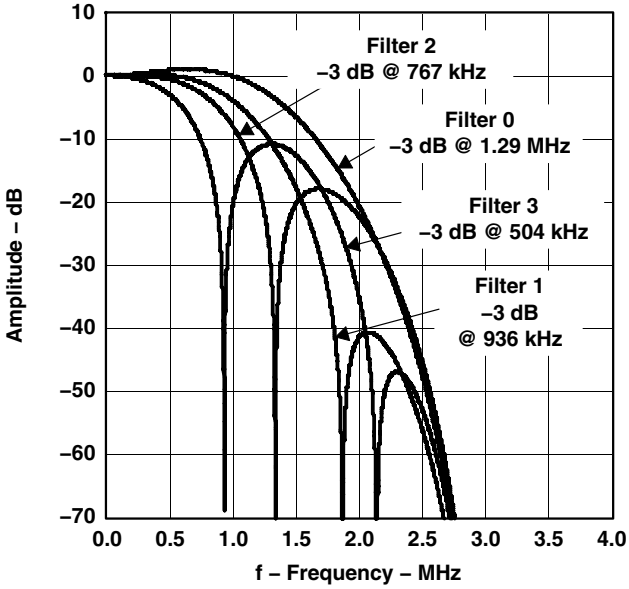

Figure 2–5. Color Low-Pass Filter With Filter Frequency Response, NTSC Square Pixel Sampling

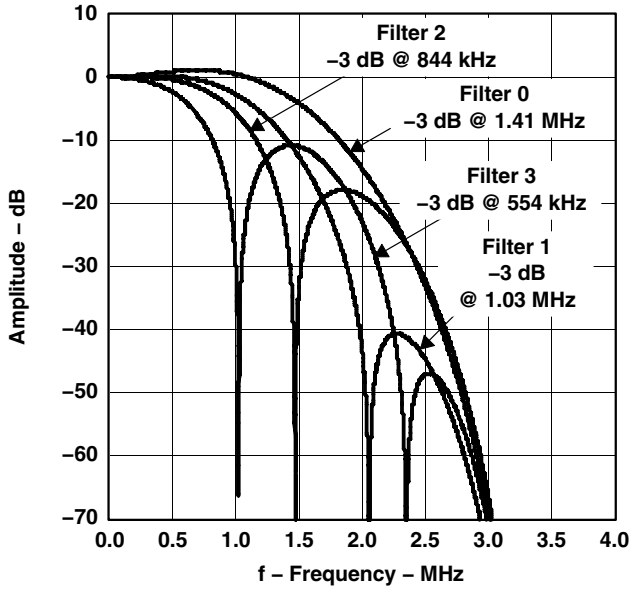

Figure 2–6. Color Low-Pass Filter With Filter Characteristics, NTSC/PAL ITU-R BT.601 Sampling

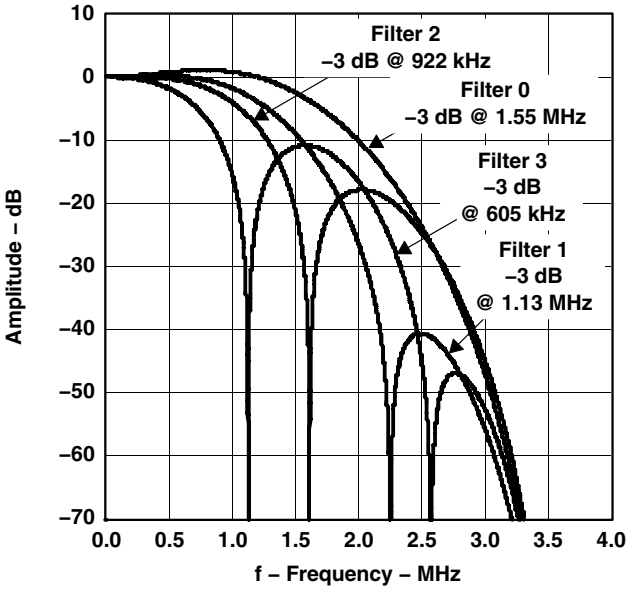

Figure 2–7. Color Low-Pass Filter With Filter Characteristics, PAL Square Pixel Sampling

2.2.2.2 Y/C Separation

Y/C separation can be done using adaptive 5-line (5-H delay) comb filters or a chroma trap filter. The comb filter can be selectively bypassed in the luma or chroma path. If the comb filter is bypassed in the luma path, then chroma trap filters are used which are shown in Figure 2–8 through Figure 2–11. TI's patented adaptive comb filter algorithm reduces artifacts such as hanging dots at color boundaries. It detects and properly handles false colors in high-frequency luminance images such as a multiburst pattern or circle pattern.

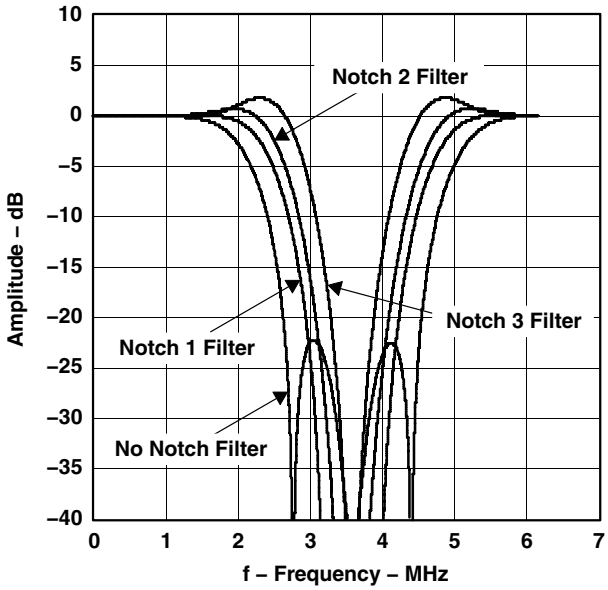

Figure 2–8. Chroma Trap Filter Frequency Response, NTSC Square Pixel Sampling

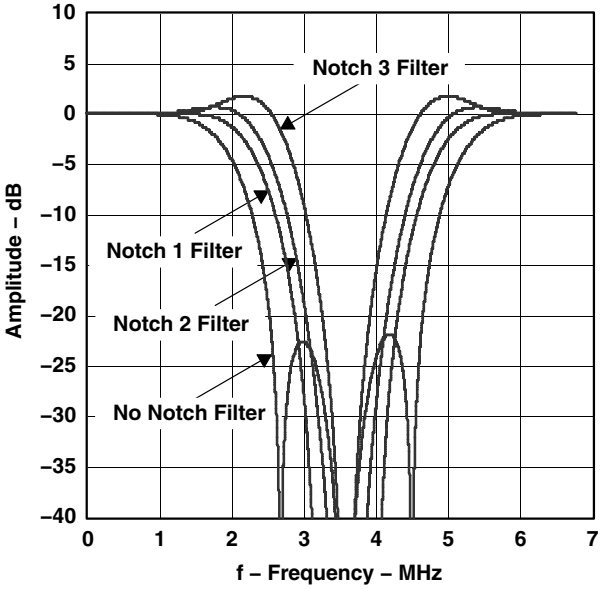

Figure 2–9. Chroma Trap Filter Frequency Response, NTSC ITU-R BT.601 Sampling

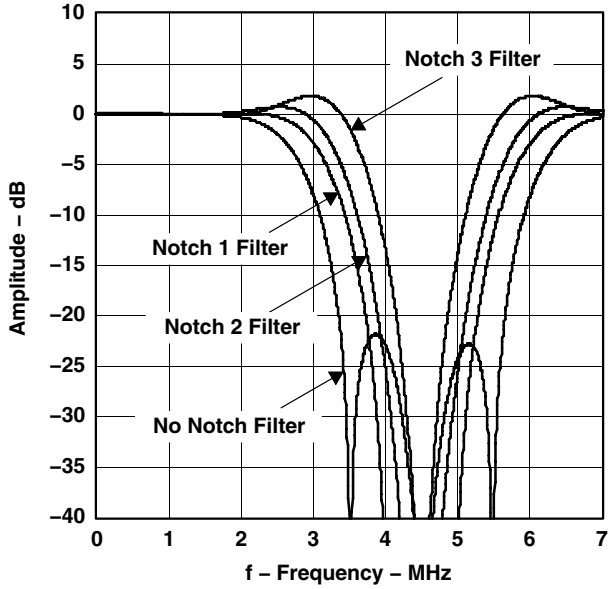

Figure 2–10. Chroma Trap Filter Frequency Response, PAL ITU-R BT.601 Sampling

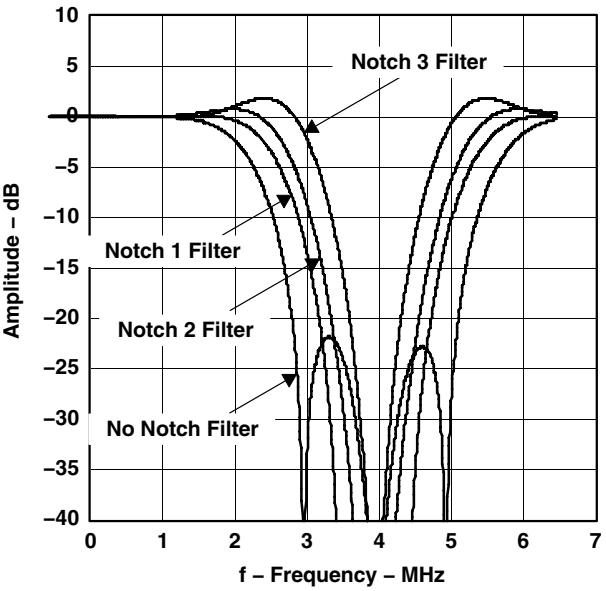

Figure 2–11. Chroma Trap Filter Frequency Response, PAL Square Pixel Sampling

2.2.3 Luminance Processing

The digitized composite video signal passes through either a luminance comb filter or a chroma trap filter, either of which removes chrominance information from the composite signal to generate a luminance signal. The luminance signal is then fed into the input of a peaking circuit. Figure 2–12 illustrates the basic functions of the luminance data path. In the case of S-video, the luminance signal bypasses the comb filter or chroma trap filter and is fed directly to the circuit. A peaking filter (edge enhancer) amplifies high-frequency components of the luminance signal. Figure 2–13, Figure 2–14, and Figure 2–15 show the characteristics of the peaking filter at four different gain settings that are user-programmable via the I^2C interface.

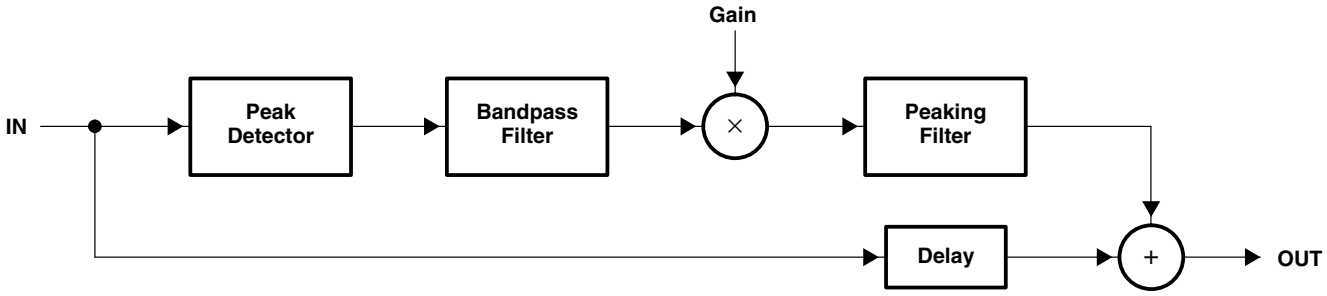

Figure 2–12. Luminance Edge-Enhancer Peaking Block Diagram

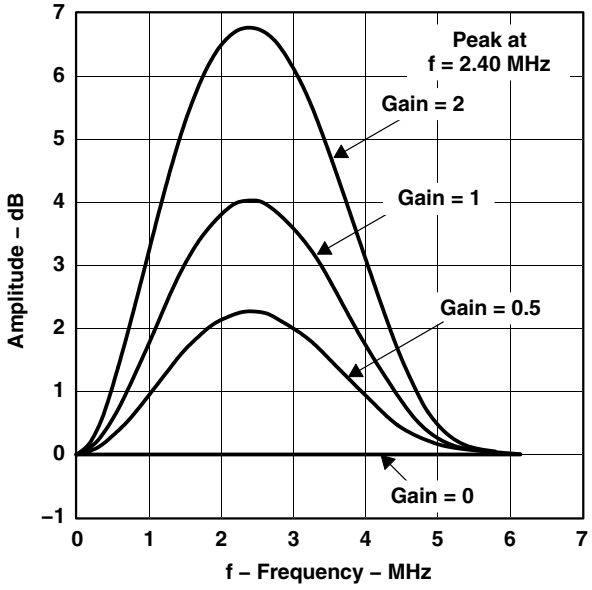

Figure 2–13. Peaking Filter Response, NTSC Square Pixel Sampling

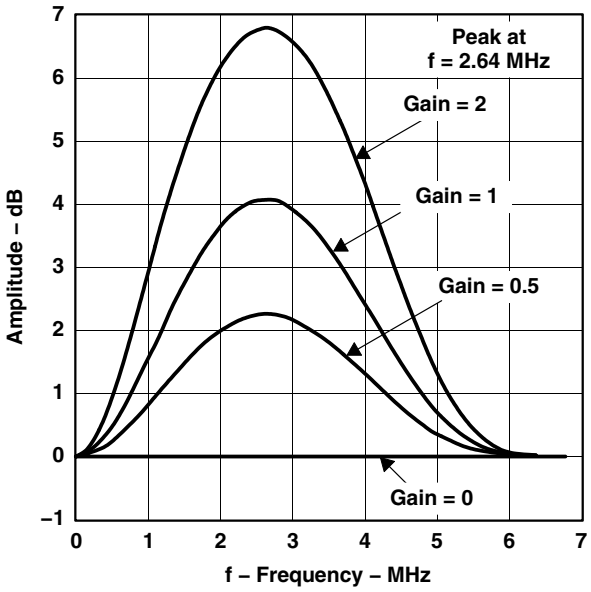

Figure 2–14. Peaking Filter Response, NTSC/PAL ITU-R BT.601 Sampling

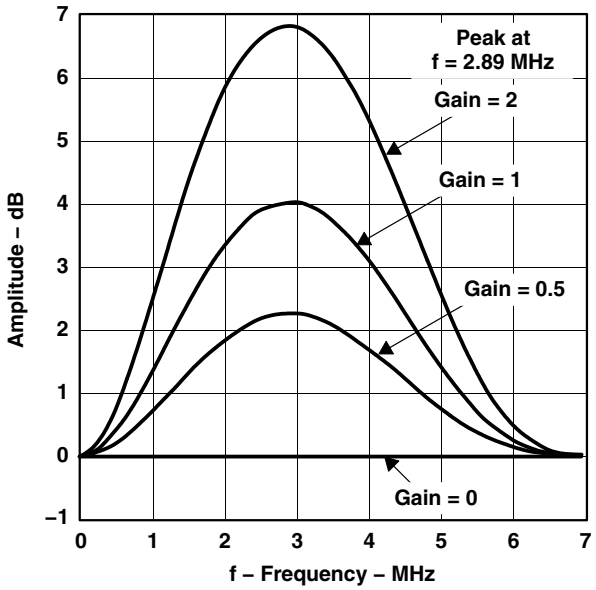

Figure 2–15. Peaking Filter Response, PAL Square Pixel Sampling

2.2.3.1 Color Transient Improvement

Color transient improvement (CTI) enhances horizontal color transients. The color difference signal transition points are maintained, but the edges are enhanced for signals which have bandwidth-limited color components.

2.3 Clock Circuits

An internal line-locked PLL generates the system and pixel clocks. A 14.318-MHz clock is required to drive the PLL. This can be input to the TVP5147 decoder at the 1.8-V level on terminal 74 (XTAL1), or a crystal of 14.318-MHz fundamental resonant frequency can be connected across terminals 74 and 75 (XTAL2). If a parallel resonant circuit is used as shown in Figure 2–16, then the external capacitors must have the following relationship:

$$C_{L1} = C_{L2} = 2C_L - C_{STRAY},$$

where C_{STRAY} is the terminal capacitance with respect to ground. Figure 2–16 shows the reference clock configurations. The TVP5147 decoder generates the DATACLK signal used for clocking data.

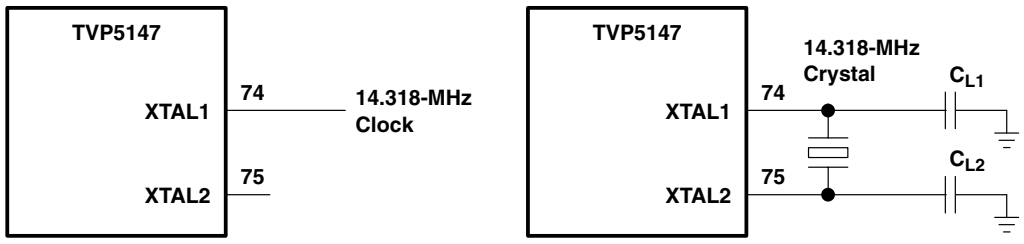

Figure 2–16. Reference Clock Configurations

2.4 Real-Time Control (RTC)

Although the TVP5147 decoder is a line-locked system, the color burst information is used to determine accurately the color subcarrier frequency and phase. This ensures proper operation with nonstandard video signals that do not follow exactly the required frequency multiple between color subcarrier frequency and video line frequency. The frequency control word of the internal color subcarrier PLL and the subcarrier reset bit are transmitted via terminal 37 (GLCO) for optional use in an end system (for example, by a video encoder). The frequency control word is a 23-bit binary number. The instantaneous frequency of the color subcarrier can be calculated using the following equation:

$$F_{PLL} = \frac{F_{ctrl}}{2^{23}} \times F_{sclk}$$

where F_{PLL} is the frequency of the subcarrier PLL, F_{ctrl} is the 23-bit PLL frequency control word, and F_{sclk} is two times the pixel frequency. This information can be generated on the GLCO terminal. Figure 2–17 shows the detailed timing diagram.

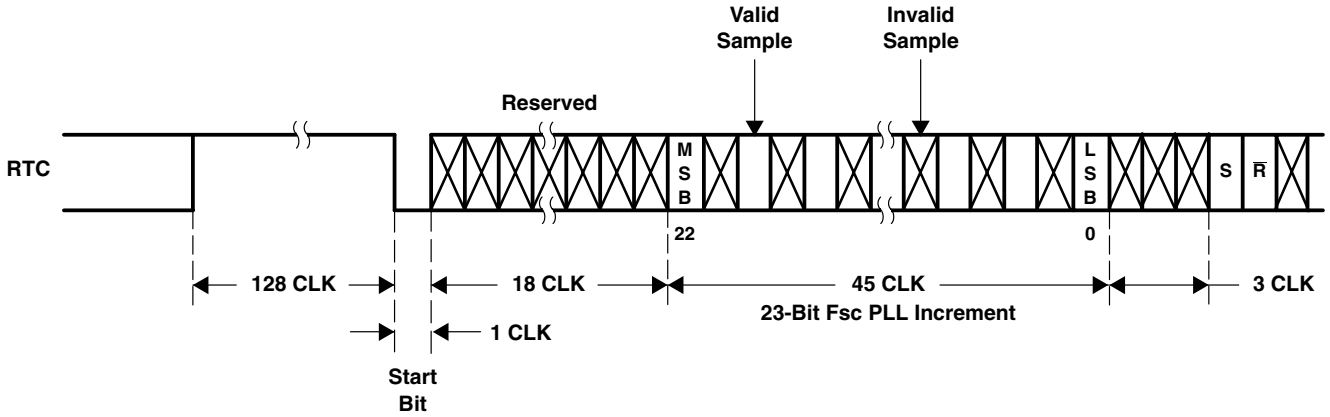

NOTE: RTC reset bit ($\overline{R}$) is active-low, Sequence bit (S) PAL: 1 = (R-Y) line normal, 0 = (R-Y) line inverted, NTSC: 1 = no change

Figure 2–17. RTC Timing

2.5 Output Formatter

The output formatter sets how the data is formatted for output on the TVP5147 output buses. Table 2–1 shows the available output modes.

Table 2–1. Output Format

TERMINAL NAME	TERMINAL NUMBER	10-Bit 4:2:2 YCbCr	20-Bit 4:2:2 YCbCr
Y_9	43	Cb9, Y9, Cr9	Y9
Y_8	44	Cb8, Y8, Cr8	Y8
Y_7	45	Cb7, Y7, Cr7	Y7
Y_6	46	Cb6, Y6, Cr6	Y6
Y_5	47	Cb5, Y5, Cr5	Y5
Y_4	50	Cb4, Y4, Cr4	Y4
Y_3	51	Cb3, Y3, Cr3	Y3
Y_2	52	Cb2, Y2, Cr2	Y2
Y_1	53	Cb1, Y1, Cr1	Y1
Y_0	54	Cb0, Y0, Cr0	Y0
C_9	57		Cb9, Cr9
C_8	58		Cb8, Cr8
C_7	59		Cb7, Cr7
C_6	60		Cb6, Cr6
C_5	63		Cb5, Cr5
C_4	64		Cb4, Cr4
C_3	65		Cb3, Cr3
C_2	66		Cb2, Cr2
C_1	69		Cb1, Cr1
C_0	70		Cb0, Cr0

Table 2–2. Summary of Line Frequencies, Data Rates, and Pixel/Line Counts

STANDARDS	PIXELS PER LINE	ACTIVE PIXELS PER LINE	LINES PER FRAME	PIXEL FREQUENCY (MHz)	COLOR SUBCARRIER FREQUENCY (MHz)	HORIZONTAL LINE RATE (kHz)
601 sampling						
NTSC-J, M	858	720	525	13.5	3.579545	15.73426
NTSC-4.43	858	720	525	13.5	4.43361875	15.73426
PAL-M	858	720	525	13.5	3.57561149	15.73426
PAL-60	858	720	525	13.5	4.43361875	15.73426
PAL-B, D, G, H, I	864	720	625	13.5	4.43361875	15.625
PAL-N	864	720	625	13.5	4.43361875	15.625
PAL-Nc	864	720	625	13.5	3.58205625	15.625
SECAM	864	720	625	13.5	Dr = 4.406250 Db = 4.250000	15.625
Square sampling						
NTSC-J, M	780	640	525	12.2727	3.579545	15.73426
NTSC-4.43	780	640	525	12.2727	4.43361875	15.73426
PAL-M	780	640	525	12.2727	3.57561149	15.73426
PAL-60	780	640	525	12.2727	4.43361875	15.73426
PAL-B, D, G, H, I	944	768	625	14.75	4.43361875	15.625
PAL-N	944	768	625	14.75	4.43361875	15.625
PAL-Nc	944	768	625	14.75	3.58205625	15.625
SECAM	944	768	625	14.75	Dr = 4.406250 Db = 4.250000	15.625

2.5.1 Separate Syncs

VS, HS, and VBLK are independently software programmable to a 1× pixel count. This allows any possible alignment to the internal pixel count and line count. The default settings for 525-line and 625-line video outputs are given as examples below. FID changes at the same transient time when the trailing edge of vertical sync occurs. The polarity of FID is programmable by an I^2C interface.

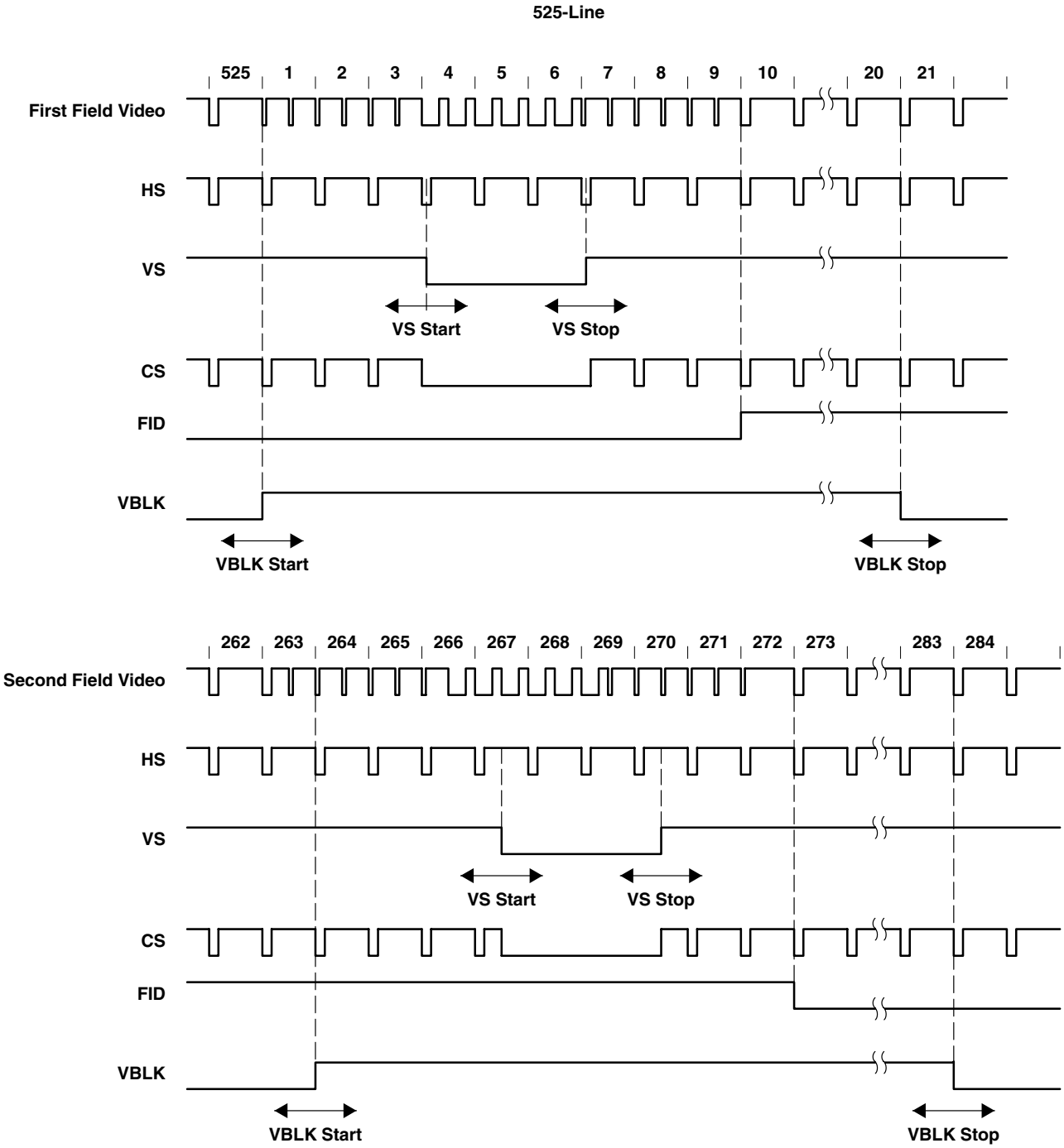

NOTE: Line numbering conforms to ITU-R BT.470

Figure 2–18. Vertical Synchronization Signals for 525-Line System

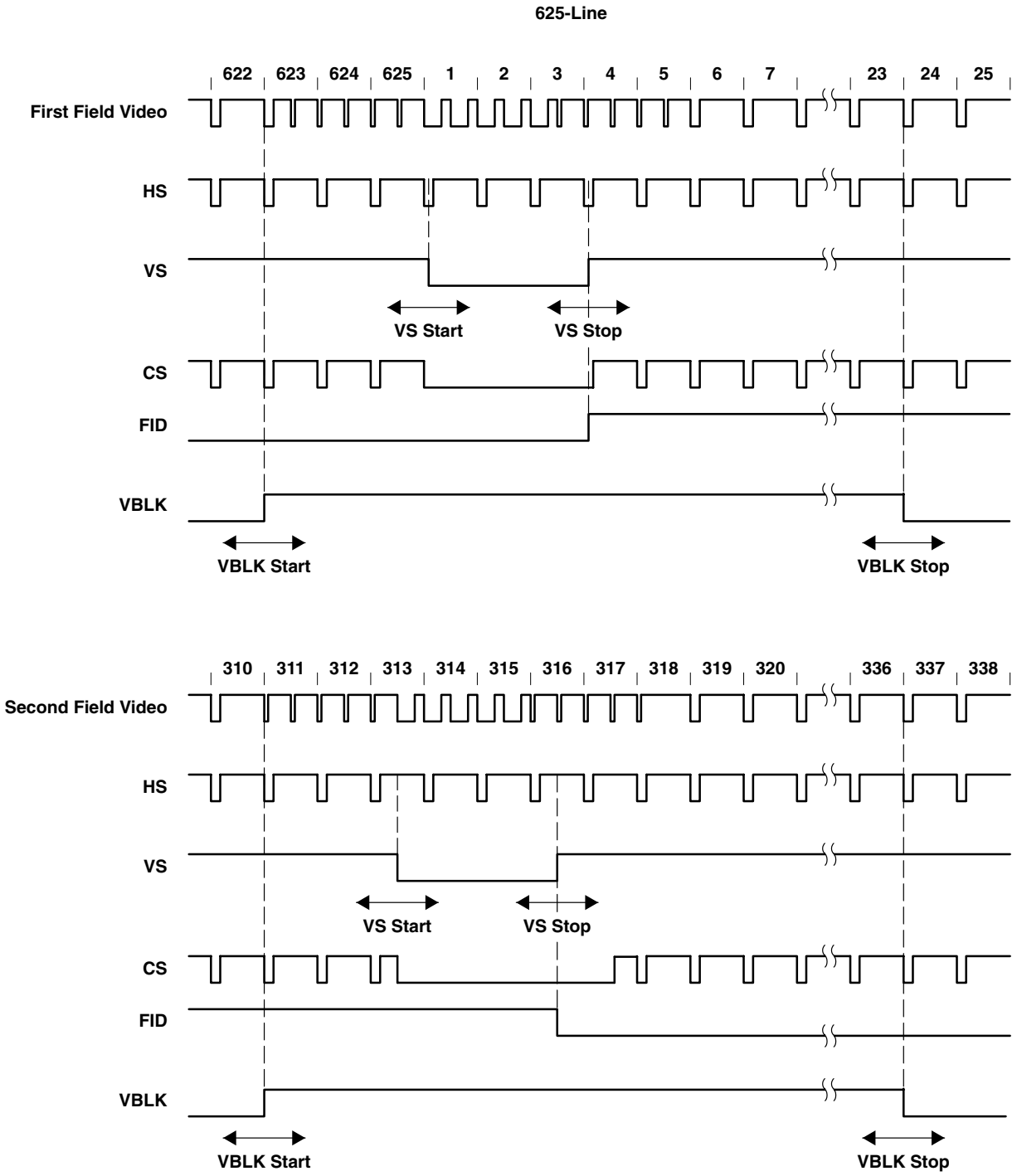

NOTE: Line numbering conforms to ITU-R BT.470

Figure 2–19. Vertical Synchronization Signals for 625-Line System

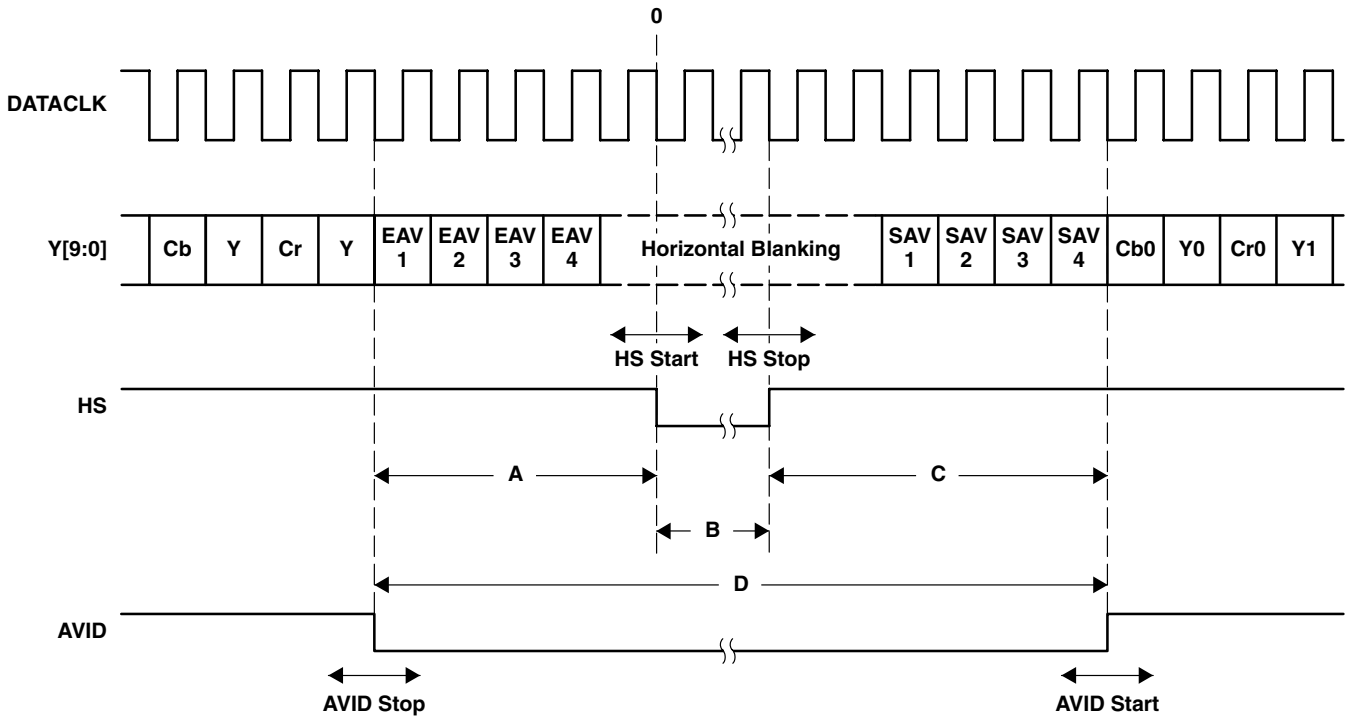

DATACLK = 2× Pixel Clock

Mode	A	B	C	D
NTSC 601	106	128	42	276
PAL 601	112	128	48	288
NTSC Sqp	108	128	44	280
PAL Sqp	144	128	80	352

NOTE: ITU-R BT.656 10-bit 4:2:2 timing with 2× pixel clock reference

Figure 2–20. Horizontal Synchronization Signals for 10-Bit 4:2:2 Mode

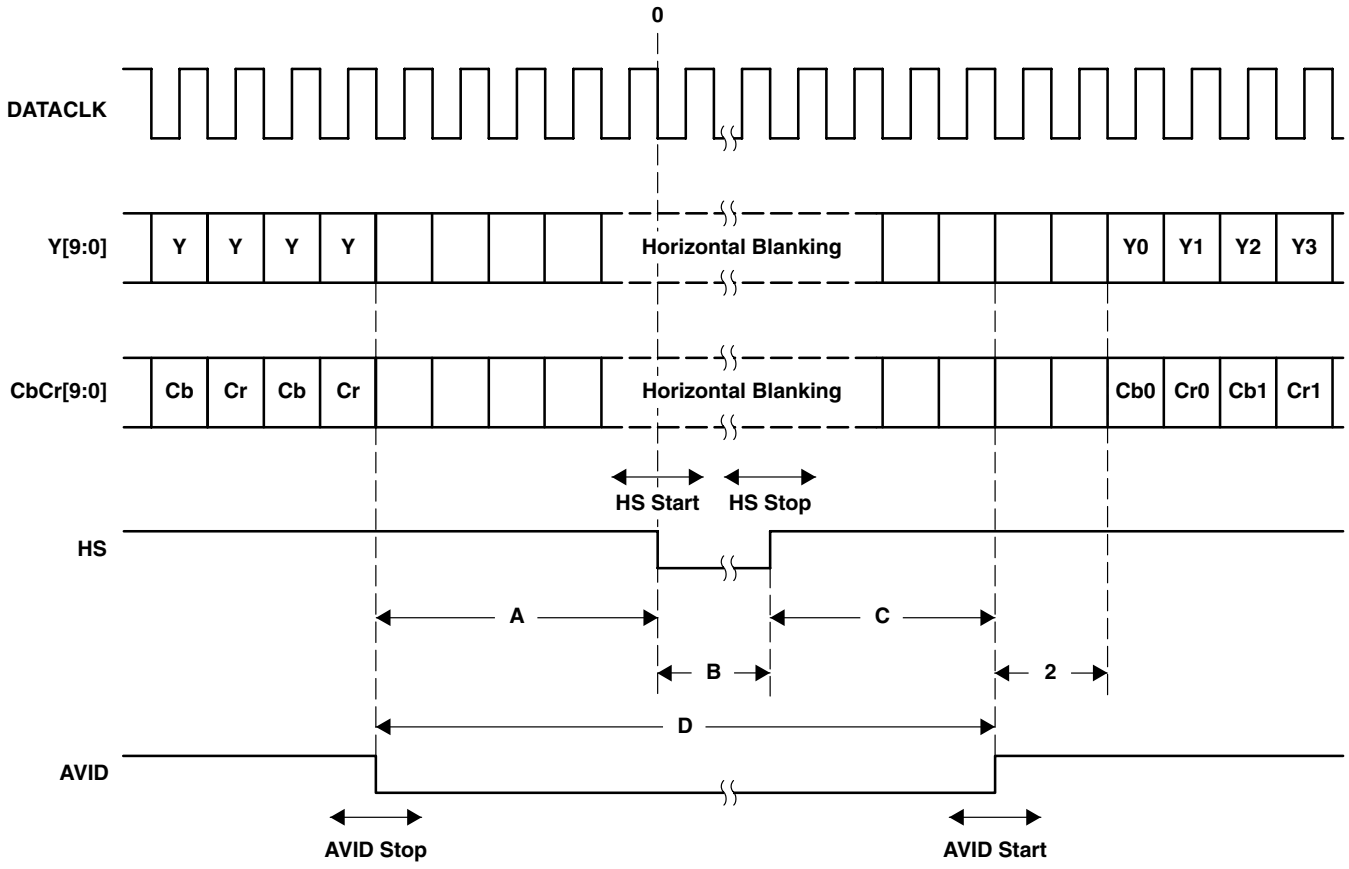

NOTE: AVID rising edge occurs 4 clock cycles early.

DATACLK = 1× Pixel Clock

Mode	A	B	C	D
NTSC 601	53	64	19	136
PAL 601	56	64	22	142
NTSC Sqp	54	64	20	138
PAL Sqp	72	64	38	174

NOTE: 20-bit 4:2:2 timing with 1× pixel clock reference

Figure 2–21. Horizontal Synchronization Signals for 20-Bit 4:2:2 Mode

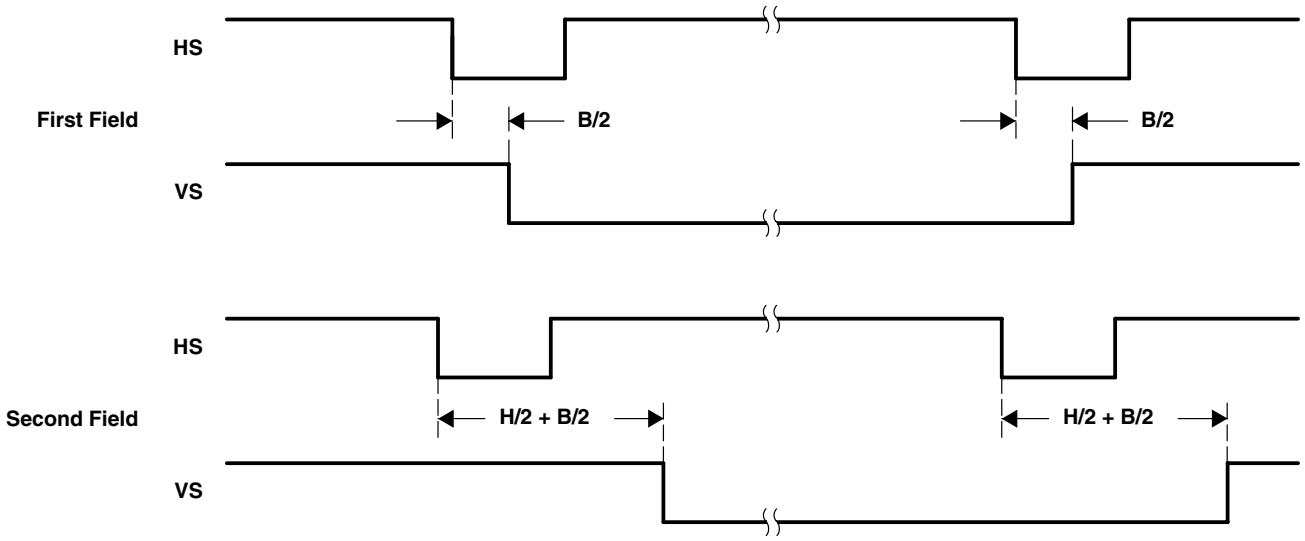

	10-Bit (PCLK = 2× Pixel Clock)		20-Bit (PCLK = 1× Pixel Clock)	
Mode	B/2	H/2	B/2	H/2
NTSC 601	64	858	32	429
PAL 601	64	864	32	432
NTSC Sqp	64	780	32	390
PAL Sqp	64	944	32	472

Figure 2–22. VSYNC Position With Respect to HSYNC

2.5.2 Embedded Syncs

Standards with embedded syncs insert the SAV and EAV codes into the data stream on the rising and falling edges of AVID. These codes contain the V and F bits which also define vertical timing. Table 2–3 gives the format of the SAV and EAV codes.

H equals 1 always indicates EAV. H equals 0 always indicates SAV. The alignment of V and F to the line and field counter varies depending on the standard.

The P bits are protection bits:

P3 = V xor H; P2 = F xor H; P1 = F xor V; P0 = F xor V xor H

Table 2–3. EAV and SAV Sequence

	D9 (MSB)	D8	D7	D6	D5	D4	D3	D2	D1	D0
Preamble	1	1	1	1	1	1	1	1	1	1
Preamble	0	0	0	0	0	0	0	0	0	0
Preamble	0	0	0	0	0	0	0	0	0	0
Status word	1	F	V	H	P3	P2	P1	P0	0	0

2.6 I²C Host Interface

Communication with the TVP5147 decoder is via an I²C host interface. The I²C standard consists of two signals, the serial input/output data (SDA) line and the serial input clock line (SCL), which carry information between the devices connected to the bus. A third signal (I2CA) is used for slave address selection. Although an I²C system can be multimastered, the TVP5147 decoder functions as a slave device only.

Because SDA and SCL are kept open-drain at a logic-high output level or when the bus is not driven, the user must connect SDA and SCL to a positive supply voltage via a pullup resistor on the board. The slave addresses select signal, terminal 37 (I2CA), enables the use of two TVP5147 devices tied to the same I^{2}C bus, because it controls the least significant bit of the I^{2}C device address.

Table 2–4. I^{2}C Host Interface Terminal Description

SIGNAL	TYPE	DESCRIPTION
I2CA	I	Slave address selection
SCL	I	Input clock line
SDA	I/O	Input/output data line

2.6.1 Reset and I^{2}C Bus Address Selection

The TVP5147 decoder can respond to two possible chip addresses. The address selection is made at reset by an externally supplied level on the I2CA terminal. The TVP5147 decoder samples the level of terminal 37 at power up or at the trailing edge of RESETB and configures the I^{2}C bus address bit A0. The I2CA terminal has an internal pulldown resistor to pull the terminal low to set a zero.

Table 2–5. I^{2}C Address Selection

A6	A5	A4	A3	A2	A1	A0 (I2CA)	R/W	HEX
1	0	1	1	1	0	0 (default)	1/0	B9/B8
1	0	1	1	1	0	1 †	1/0	BB/BA

† If terminal 37 is strapped to DVDD via a 2.2-kΩ resistor, I^{2}C device address A0 is set to 1.

2.6.2 I^{2}C Operation

Data transfers occur using the following illustrated formats.

S	10111000	ACK	Subaddress	ACK	Send data	ACK	P

Read from I^{2}C control registers

S	10111000	ACK	Subaddress	ACK	S	10111001	ACK	Receive data	NAK	P

S = I^{2}C bus start condition
P = I^{2}C bus stop condition
ACK = Acknowledge generated by the slave
NAK = Acknowledge generated by the master, for multiple-byte read master with ACK each byte except last byte
Subaddress = Subaddress byte
Data = Data byte. If more than one byte of data is transmitted (read and write), the subaddress pointer is automatically incremented.
I^{2}C bus address = Example shown that I^{2}CA is in default mode. Write (B8h), read (B9h)

2.6.3 VBUS Access

The TVP5147 decoder has additional internal registers accessible through an indirect access to an internal 24-bit address wide VBUS. Figure 2–23 shows the VBUS register access.

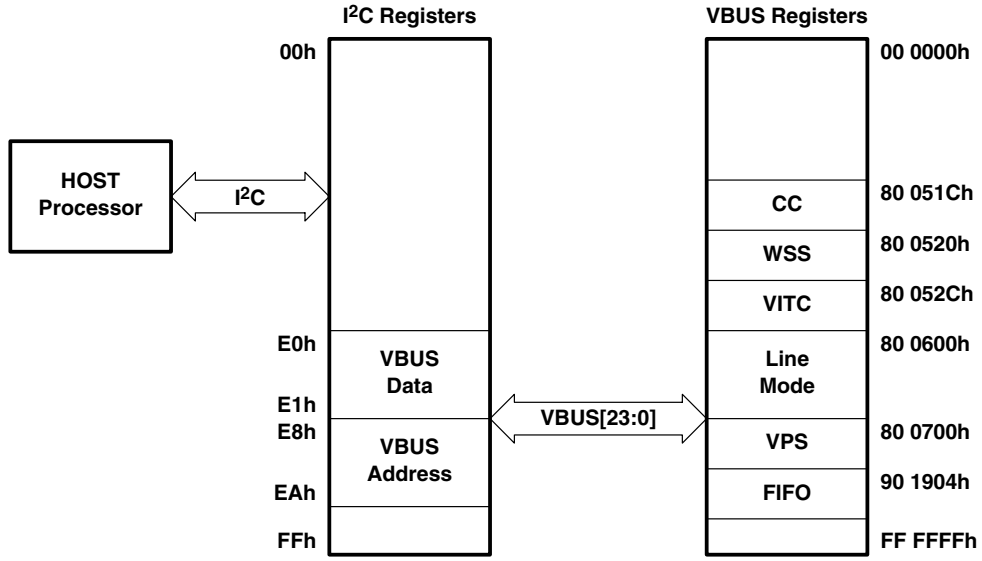

VBUS Write

Single Byte

S	B8	ACK	E8	ACK	VA0	ACK	VA1	ACK	VA2	ACK	P

S	B8	ACK	E0	ACK	Send Data	ACK	P

Multiple Bytes

S	B8	ACK	E8	ACK	VA0	ACK	VA1	ACK	VA2	ACK	P

S	B8	ACK	E1	ACK	Send Data	ACK	• • •	Send Data	ACK	P

VBUS Read

Single Byte

S	B8	ACK	E8	ACK	VA0	ACK	VA1	ACK	VA2	ACK	P

S	B8	ACK	E0	ACK	S	B9	ACK	Read Data	NAK	P

Multiple Bytes

S	B8	ACK	E8	ACK	VA0	ACK	VA1	ACK	VA2	ACK	P

S	B8	ACK	E1	ACK	S	B9	ACK	Read Data	ACK	• • •	Read Data	NAK	P

NOTE: Examples use default I2C address
ACK = Acknowledge generated by the slave
NAK = No acknowledge generated by the master

Figure 2–23. VBUS Access

2.7 VBI Data Processor

The TVP5147 VBI data processor (VDP) slices various data services like teletext (WST, NABTS), closed caption (CC), wide screen signaling (WSS), program delivery control (PDC), vertical interval time code (VITC), video program system (VPS), copy generation management system (CGMS) data, and electronic program guide (Gemstar) 1x/2x. Table 2–6 shows the supported VBI system.

These services are acquired by programming the VDP to enable the reception of one or more vertical blank interval (VBI) data standard(s) during the VBI. The VDP can be programmed on a line-per-line basis to enable simultaneous reception of different VBI formats, one per line. The results are stored in a FIFO and/or registers. Because of the high data bandwidth, teletext results are stored in FIFO only. The TVP5147 decoder provides fully decoded V-Chip data to the dedicated registers at subaddresses 80 0540h–80 0543h.

Table 2–6. Supported VBI System

VBI SYSTEM	STANDARD	LINE NUMBER	NUMBER OF BYTES
Teletext WST A	SECAM	6–23 (Fields 1 and 2)	38
Teletext WST B	PAL	6–22 (Fields 1 and 2)	43
Teletext NABTS C	NTSC	10–21 (Fields 1 and 2)	34
Teletext NABTS D	NTSC-J	10–21 (Fields 1 and 2)	35
Closed Caption	PAL	22 (Fields 1 and 2)	2
Closed Caption	NTSC	21 (Fields 1 and 2)	2
WSS	PAL	23 (Fields 1 and 2)	14 bits
WSS-CGMS	NTSC	20 (Fields 1 and 2)	20 bits
VITC	PAL	6–22	9
VITC	NTSC	10–20	9
VPS (PDC)	PAL	16	13
V-Chip (decoded)	NTSC	21 (Fields 1 and 2)	2
Gemstar 1x	NTSC		2
Gemstar 2x	NTSC		5 with frame byte
User	Any	Programmable	Programmable

2.7.1 VBI FIFO and Ancillary Data in Video Stream

Sliced VBI data can be output as ancillary data in the video stream in ITU-R BT.656 mode. VBI data is output on the Y[9:2] terminals during the horizontal blanking period. Table 2–7 shows the header format and sequence of the ancillary data inserted into the video stream. This format is also used to store any VBI data into the FIFO. The size of the FIFO is 512 bytes. Therefore, the FIFO can store up to 11 lines of teletext data with the NTSC NABTS standard.

Table 2–7. Ancillary Data Format and Sequence

BYTE NO.	D7 (MSB)	D6	D5	D4	D3	D2	D1	D0 (LSB)	DESCRIPTION	
0	0	0	0	0	0	0	0	0	Ancillary data preamble	
1	1	1	1	1	1	1	1	1		
2	1	1	1	1	1	1	1	1		
3	NEP	EP	0	1	0	DID2	DID1	DID0	Data ID (DID)	
4	NEP	EP	F5	F4	F3	F2	F1	F0	Secondary data ID (SDID)	
5	NEP	EP	N5	N4	N3	N2	N1	N0	Number of 32-bit data (NN)	
6	Video line # [7:0]								Internal data ID0 (IDID0)	
7	0	0	0	Data error	Match #1	Match #2	Video line # [9:8]		Internal data ID1 (IDID1)	
8	1. Data								Data byte	1st word
9	2. Data								Data byte	
10	3. Data								Data byte	
11	4. Data								Data byte	
:	:								:	:
	m. Data								Data byte	Nth word
	CS[7:0]								Check sum	
4N+7	0	0	0	0	0	0	0	0	Fill byte	

NOTE: The number of bytes (m) varies depending on the VBI data service.

EP: Even parity for D0–D5, NEP: Negated even parity

DID: 91h: Sliced data of VBI lines of first field
53h: Sliced data of line 24 to end of first field
55h: Sliced data of VBI lines of second field
97h: Sliced data of line 24 to end of second field

SDID: This field holds the data format taken from the line mode register bits [2:0] of the corresponding line.

NN: Number of Dwords beginning with byte 8 through 4N+7. Note this value is the number of Dwords where each Dword is 4 bytes.

IDID0: Transaction video line number [7:0]

IDID1: Bit 0/1 = Transaction video line number [9:8]
Bit 2 = Match 2 flag
Bit 3 = Match 1 flag
Bit 4 = 1 if an error was detected in the EDC block. 0 if no error was detected.

CS: Sum of D0–D7 of first data through last data byte.

Fill byte: Fill bytes make a multiple of 4 bytes from byte 0 to last fill byte. For teletext modes, byte 8 is the sync pattern byte. Byte 9 is the first data byte.

2.7.2 VBI Raw Data Output

The TVP5147 decoder can output raw A/D video data at twice the sampling rate for external VBI slicing. This is transmitted as an ancillary data block, although somewhat differently from the way the sliced VBI data is transmitted in the FIFO format as described in Section 2.7.1. The samples are transmitted during the active portion of the line. VBI raw data uses ITU-R BT.656 format having only luma data. The chroma samples are replaced by luma samples. The TVP5147 decoder inserts a four-byte preamble 000h 3FFh 3FFh 180h before data start. There are no checksum bytes and fill bytes in this mode.

Table 2–8. VBI Raw Data Output Format

BYTE NO.	D9 (MSB)	D8	D7	D6	D5	D4	D3	D2	D1	D0 (LSB)	DESCRIPTION
0	0	0	0	0	0	0	0	0	0	0	VBI raw data preamble
1	1	1	1	1	1	1	1	1	1	1	
2	1	1	1	1	1	1	1	1	1	1	
3	0	1	1	0	0	0	0	0	0	0	
4	1. Data										2× pixel rate luma data (i.e., NTSC 601: n = 1707)
5	2. Data										
:	:										
n–1	n–5. Data										
n	n–4. Data										

2.8 Reset and Initialization

Reset is initiated at power up or any time terminal 34 (RESETB) is brought low. Table 2–9 describes the status of the TVP5147 terminals during and immediately after reset.

Table 2–9. Reset Sequence

SIGNAL NAME	DURING RESET	RESET COMPLETED
Y[9:0], C[9:0]	Input	High-impedance
RESETB, PWDN, SDA, SCL, FSS, AVID, GLCO, HS, VS, FID	Input	Input
INTREQ	Input	Output
DATACLK	Output	High-impedance

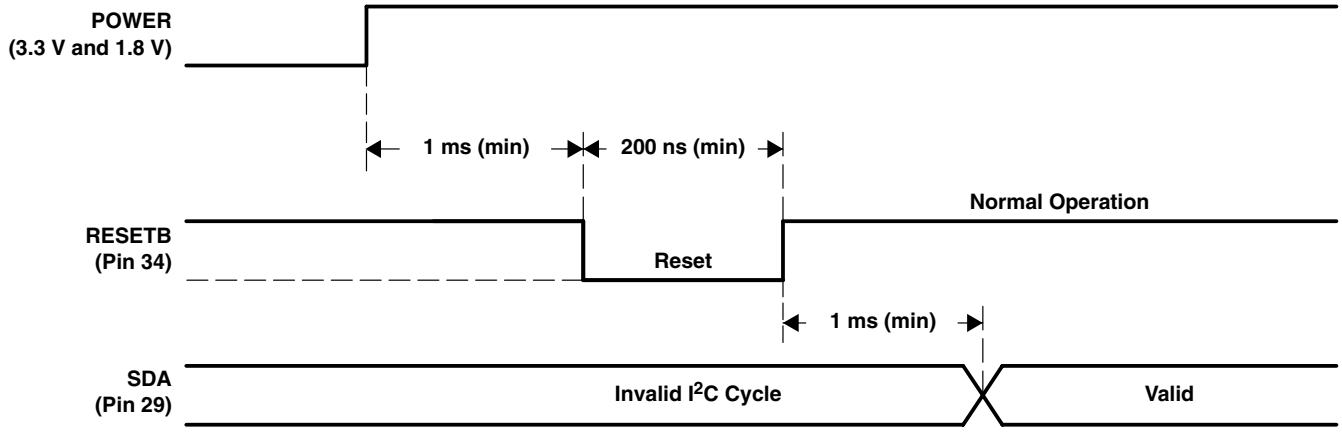

Figure 2–24. Reset Timing

The TVP5147 requires that pin 69 (C_1/GPIO) be held LOW. If using the 20-/16-bit mode or using this pin as GPIO, then this pin must be pulled low through a 2.2-kΩ pulldown resistor (see Figure 5–1). If unused, this pin can be shorted to ground. (Note: If using the 20-/16-bit mode and only using the 16 MSBs, it is possible to short pin 69 to GND, but the current for IOVDD will increase by 2 or 3 mA.)

After reset, the user must write the following I²C commands to the TVP5147:

STEP	I²C SUBADDRESS	I²C DATA
1	0xE8	0x02
2	0xE9	0x00
3	0xEA	0x80
4	0xE0	0x01
5	0xE8	0x60
6	0xE9	0x00
7	0xEA	0xB0
8	0xE0	0x01
9	0xE8	0x16
10	0xE9	0x00
11	0xEA	0xA0
12	0xE0	0x16
13	0xE8	0x60
14	0xE9	0x00
15	0xEA	0xB0
16	0xE0	0x00
17	0x03	0x01
18	0x03	0x00

Afterward, the user programs the device as usual.

2.9 Adjusting External Syncs

The proper sequence to program the following external syncs is:

- To set NTSC, PAL-M, NTSC 443, PAL60 (525-line modes):
  - Set the video standard to NTSC (register 02h)
  - Set HSYNC, VSYNC, VBLK, and AVID external syncs (registers 16h through 24h)
- To set PAL, PAL-N, SECAM (625-line modes):
  - Set the video standard to PAL (register 02h)
  - Set HSYNC, VSYNC, VBLK, and AVID external syncs (registers 16h through 24h)
- For autoswitch, set the video standard to autoswitch (register 02h)

2.10 Internal Control Registers

The TVP5147 decoder is initialized and controlled by a set of internal registers that define the operating parameters of the entire device. Communication between the external controller and the TVP5147 is through a standard I²C host port interface, as described earlier. Table 2–10 shows the summary of these registers. Detailed programming information for each register is described in the following sections. Additional registers are accessible through an indirect procedure involving access to an internal 24-bit address wide VBUS. Table 2–11 shows the summary of the VBUS registers.

NOTE: Do not write to reserved registers. Reserved bits in any defined register must be written with 0s, unless otherwise noted.

Table 2–10. I²C Register Summary

REGISTER NAME	I²C SUBADDRESS	DEFAULT	R/W
Input select	00h	00h	R/W
AFE gain control	01h	0Fh	R/W
Video standard	02h	00h	R/W
Operation mode	03h	00h	R/W
Autoswitch mask	04h	23h	R/W
Color killer	05h	10h	R/W
Luminance processing control 1	06h	00h	R/W
Luminance processing control 2	07h	00h	R/W
Luminance processing control 3	08h	02h	R/W
Luminance brightness	09h	80h	R/W
Luminance contrast	0Ah	80h	R/W
Chrominance saturation	0Bh	80h	R/W
Chroma hue	0Ch	00h	R/W
Chrominance processing control 1	0Dh	00h	R/W
Chrominance processing control 2	0Eh	0Eh	R/W
Reserved	0Fh–15h		
AVID start pixel	16h–17h	055h	R/W
AVID stop pixel	18h–19h	325h	R/W
HSYNC start pixel	1Ah–1Bh	000h	R/W
HSYNC stop pixel	1Ch–1Dh	040h	R/W
VSYNC start line	1Eh–1Fh	004h	R/W
VSYNC stop line	20h–21h	007h	R/W
VBLK start line	22h–23h	001h	R/W
VBLK stop line	24h–25h	015h	R/W
Reserved	26h–2Ah		
Overlay delay	2Bh	00h	R/W
Reserved	2Ch		
CTI delay	2Dh	00h	R/W
CTI control	2Eh	00h	R/W
Reserved	2Fh–30h		
GLCO/RTC	31h	05h	R/W
Sync control	32h	00h	R/W
Output formatter 1	33h	40h	R/W
Output formatter 2	34h	00h	R/W
Output formatter 3	35h	FFh	R/W
Output formatter 4	36h	FFh	R/W
Output formatter 5	37h	FFh	R/W
Output formatter 6	38h	FFh	R/W
Clear lost lock detect	39h	00h	R/W
Status 1	3Ah		R
Status 2	3Bh		R

NOTE: R = Read only
W = Write only
R/W = Read and write
Reserved register addresses must not be written to.

Table 2–10. I²C Register Summary (Continued)

REGISTER NAME	I²C SUBADDRESS	DEFAULT	R/W
AGC gain status	3Ch–3Dh		R
Reserved	3Eh		
Video standard status	3Fh		R
GPIO input 1	40h		R
GPIO input 2	41h		R
Vertical line count	42h–43h		R
Reserved	44h–45h		
AFE coarse gain for CH1	46h	20h	R/W
AFE coarse gain for CH2	47h	20h	R/W
AFE coarse gain for CH3	48h	20h	R/W
AFE coarse gain for CH4	49h	20h	R/W
AFE fine gain for Pb	4Ah–4Bh	900h	R/W
AFE fine gain for chroma	4Ch–4Dh	900h	R/W
AFE fine gain for Pr	4Eh–4Fh	900h	R/W
AFE fine gain for CVBS_Luma	50h–51h	900h	R/W
Reserved	52h–56h		
Field ID control	57h	00h	R/W
Reserved	58h–6Fh		
ROM version	70h		R
Reserved	71h–73h		
AGC white peak processing	74h	00h	R/W
F and V bit control	75h	12h	R/W
VCR trick mode control	76h	8Ah	R/W
Horizontal shake increment	77h	64h	R/W
AGC increment speed	78h	05h	R/W
AGC increment delay	79h	1Eh	R/W
Reserved	7Ah–7Eh		
Analog output control 1	7Fh	00h	R/W
Chip ID MSB	80h	51h	R
Chip ID LSB	81h	47h	R
Reserved	82h–B0h		
VDP TTX filter 1 mask 1	B1h	00h	R/W
VDP TTX filter 1 mask 2	B2h	00h	R/W
VDP TTX filter 1 mask 3	B3h	00h	R/W
VDP TTX filter 1 mask 4	B4h	00h	R/W
VDP TTX filter 1 mask 5	B5h	00h	R/W
VDP TTX filter 2 mask 1	B6h	00h	R/W
VDP TTX filter 2 mask 2	B7h	00h	R/W
VDP TTX filter 2 mask 3	B8h	00h	R/W
VDP TTX filter 2 mask 4	B9h	00h	R/W
VDP TTX filter 2 mask 5	BAh	00h	R/W

NOTE: R = Read only
W = Write only
R/W = Read and write
Reserved register addresses must not be written to.

Table 2–10. I²C Register Summary (Continued)

REGISTER NAME	I²C SUBADDRESS	DEFAULT	R/W
VDP TTX filter control	BBh	00h	R/W
VDP FIFO word count	BCh		R
VDP FIFO interrupt threshold	BDh	80h	R/W
Reserved	BEh		
VDP FIFO reset	BFh	00h	R/W
VDP FIFO output control	C0h	00h	R/W
VDP line number interrupt	C1h	00h	R/W
VDP pixel alignment	C2h–C3h	01Eh	R/W
Reserved	C4h–D5h		
VDP line start	D6h	06h	R/W
VDP line stop	D7h	1Bh	R/W
VDP global line mode	D8h	FFh	R/W
VDP full field enable	D9h	00h	R/W
VDP full field mode	DAh	FFh	R/W
Reserved	DBh–DFh		
VBUS data access with no VBUS address increment	E0h	00h	R/W
VBUS data access with VBUS address increment	E1h	00h	R/W
FIFO read data	E2h		R
Reserved	E3h–E7h		
VBUS address access	E8h–EAh	00 0000h	R/W
Reserved	EBh–EFh		
Interrupt raw status 0	F0h		R
Interrupt raw status 1	F1h		R
Interrupt status 0	F2h		R
Interrupt status 1	F3h		R
Interrupt mask 0	F4h	00h	R/W
Interrupt mask 1	F5h	00h	R/W
Interrupt clear 0	F6h	00h	R/W
Interrupt clear 1	F7h	00h	R/W
Reserved	F8h–FFh		

NOTE: R = Read only
W = Write only
R/W = Read and write
Reserved register addresses must not be written to.

Table 2–11. VBUS Register Summary

REGISTER NAME	I²C SUBADDRESS	DEFAULT	R/W
Reserved	00 0000h–80 051Bh		
VDP closed caption data	80 051Ch–80 051Fh		R
VDP WSS data	80 0520h–80 0526h		R
Reserved	80 0527h–80 052Bh		
VDP VITC data	80 052Ch–80 0534h		R
Reserved	80 0535h–80 053Fh		
VDP V-Chip data	80 0540h–80 0543h		R
Reserved	80 0544h–80 05FFh		
VDP general line mode and line address	80 0600h–80 0611h	00h, FFh	R/W
Reserved	80 0612h–80 06FFh		
VDP VPS (PDC)/Gemstar data	80 0700h–80 070Ch		R
Reserved	80 070Dh–90 1903h		
VDP FIFO read	90 1904h		R
Reserved	90 1905h–A0 005Dh		
Analog output control 2	A0 05Eh	B2h	R/W
Reserved	A0 005Fh–B0 005Fh		
Interrupt configuration	B0 0060h	00h	R/W
Reserved	B0 0061h–FF FFFFh		

NOTE: Writing any value to a reserved register may cause erroneous operation of the TVP5147 decoder. It is recommended not to access any data to/from reserved registers.

2.11 Register Definitions

2.11.1 Input Select Register

Subaddress	00h
Default	00h

7	6	5	4	3	2	1	0
Input select [7:0]							

Table 2–12. Analog Channel and Video Mode Selection

MODE	INPUT(S) SELECTED	INPUT SELECT [7:0]									OUTPUT (see Note 1)
		7	6	5	4	3	2	1	0	HEX	
CVBS	VI_1_A (default)	0	0	0	0	0	0	0	0	00	N/A
	VI_1_B	0	0	0	0	0	0	0	1	01	VI_1_B
	VI_1_C	0	0	0	0	0	0	1	0	02	VI_1_C
	VI_2_A	0	0	0	0	0	1	0	0	04	VI_2_A
	VI_2_B	0	0	0	0	0	1	0	1	05	VI_2_B
	VI_2_C	0	0	0	0	0	1	1	0	06	VI_2_C
	VI_3_A	0	0	0	0	1	0	0	0	08	VI_3_A
	VI_3_B	0	0	0	0	1	0	0	1	09	VI_3_B
	VI_3_C	0	0	0	0	1	0	1	0	0A	VI_3_C
	VI_4_A	0	0	0	0	1	1	0	0	0C	VI_4_A
S-video	VI_2_A(Y), VI_1_A(C)	0	1	0	0	0	1	0	0	44	N/A
	VI_2_B(Y), VI_1_B(C)	0	1	0	0	0	1	0	1	45	VI_2_B(Y)
	VI_2_C(Y), VI_1_C(C)	0	1	0	0	0	1	1	0	46	VI_2_C(Y)
	VI_2_A(Y), VI_3_A(C)	0	1	0	1	0	1	0	0	54	VI_2_A(Y)
	VI_2_B(Y), VI_3_B(C)	0	1	0	1	0	1	0	1	55	VI_2_B(Y)
	VI_2_C(Y), VI_3_C(C)	0	1	0	1	0	1	1	0	56	VI_2_C(Y)
	VI_4_A(Y), VI_1_A(C)	0	1	0	0	1	1	0	0	4C	N/A
	VI_4_A(Y), VI_1_B(C)	0	1	0	0	1	1	0	1	4D	VI_4_A(Y)
	VI_4_A(Y), VI_1_C(C)	0	1	0	0	1	1	1	0	4E	VI_4_A(Y)
	VI_4_A(Y), VI_3_A(C)	0	1	0	1	1	1	0	0	5C	VI_4_A(Y)
	VI_4_A(Y), VI_3_B(C)	0	1	0	1	1	1	0	1	5D	VI_4_A(Y)
	VI_4_A(Y), VI_3_C(C)	0	1	0	1	1	1	1	0	5E	VI_4_A(Y)
YPbPr	VI_1_A(Pb), VI_2_A(Y), VI_3_A(Pr)	1	0	0	1	0	1	0	0	94	N/A
	VI_1_B(Pb), VI_2_B(Y), VI_3_B(Pr)	1	0	0	1	0	1	0	1	95	VI_2_B(Y)
	VI_1_C(Pb), VI_2_C(Y), VI_3_C(Pr)	1	0	0	1	0	1	1	0	96	VI_2_C(Y)

NOTE 1: When VI_1_A is set to output, the total number of inputs is nine. The video output can be either CVBS or luma.

Ten input terminals can be configured to support composite, S-video, and component YPbPr as listed in Table 2–12. User must follow this table properly for S-video and component applications because only the terminal configurations listed in Table 2–12 are supported.

2.11.2 AFE Gain Control Register

Subaddress	01h
Default	0Fh

7	6	5	4	3	2	1	0
Reserved				1	1	AGC chroma	AGC luma

Bit 3: 1 must be written to this bit.

Bit 2: 1 must be written to this bit.

AGC chroma enable: Controls automatic gain in the chroma/PbPr channel:

0 = Manual (if AGC luma is set to manual, AGC chroma is forced to be in manual)
1 = Enabled auto gain, applied a gain value acquired from the sync channel for S-video and component mode. When AGC luma is set, this state is valid. (default)

AGC luma enable: Controls automatic gain in the embedded sync channel of CVBS, S-video, component video:

0 = Manual gain, AFE coarse and fine gain frozen to the previous gain value set by AGC when this bit is set to 0.
1 = Enabled auto gain applied to only the embedded sync channel (default)

These settings only affect the analog front-end (AFE). The brightness and contrast controls are not affected by these settings.

2.11.3 Video Standard Register

Subaddress	02h
Default	00h

7	6	5	4	3	2	1	0
Reserved					Video standard [2:0]		

Video standard [2:0]:

	CVBS and S-Video	Component Video
000	= Autoswitch mode (default)	Autoswitch mode (default)
001	= (M, J) NTSC	Component 525
010	= (B, D, G, H, I, N) PAL	Component 625
011	= (M) PAL	Reserved
100	= (Combination-N) PAL	Reserved
101	= NTSC 4.43	Reserved
110	= SECAM	Reserved
111	= PAL 60	Reserved

With the autoswitch code running, the user can force the decoder to operate in a particular video standard mode by writing the appropriate value into this register. Changing these bits causes the register settings to be reinitialized.

NOTE: Sampling rate (either square pixel or ITU-R BT.601) can be set by bit 7 (sampling rate) in the output formatter 1 register at I^2C subaddress 33h (see Section 2.11.28).

2.11.4 Operation Mode Register

Subaddress	03h
Default	00h

7	6	5	4	3	2	1	0
Reserved							Power save

Power save:

0 = Normal operation (default)
1 = Power-save mode. Reduces the clock speed of the internal processor and switches off the ADCs. I^2C interface is active and all current operating settings are preserved.

2.11.5 Autoswitch Mask Register

Subaddress	04h
Default	23h

7	6	5	4	3	2	1	0
Reserved	PAL 60	SECAM	NTSC 4.43	(Nc) PAL	(M) PAL	PAL	(M, J) NTSC

Autoswitch mode mask: Limits the video formats between which autoswitch is possible.

PAL 60:

0 = Autoswitch does not include PAL 60 (default)
1 = Autoswitch includes PAL60

SECAM:

0 = Autoswitch does not include SECAM
1 = Autoswitch includes SECAM (default)

NTSC 4.43:

0 = Autoswitch does not include NTSC 4.43 (default)
1 = Autoswitch includes NTSC 4.43

(Nc) PAL:

0 = Autoswitch does not include (Nc) PAL (default)
1 = Autoswitch includes (Nc) PAL

(M) PAL:

0 = Autoswitch does not include (M) PAL (default)
1 = Autoswitch includes (M) PAL

PAL:

0 = Reserved
1 = Autoswitch includes (B, D, G, H, I, N) PAL (default)

(M, J) NTSC:

0 = Reserved
1 = Autoswitch includes (M, J) NTSC (default)

NOTE: Bits 1 and 0 must always be 1.

2.11.6 Color Killer Register

Subaddress	05h
Default	10h

7	6	5	4	3	2	1	0
Reserved	Automatic color killer		Color killer threshold [4:0]				

Automatic color killer:

00 = Automatic mode (default)
01 = Reserved
10 = Color killer enabled, the UV terminals are forced to a zero color state.
11 = Color killer disabled

Color killer threshold [4:0]:

1 1111 = 31 (maximum)
1 0000 = 16 (default)
0 0000 = 0 (minimum)

2.11.7 Luminance Processing Control 1 Register

Subaddress	06h
Default	00h

7	6	5	4	3	2	1	0
Reserved	Pedestal not present	Reserved	VBI raw	Luminance signal delay [3:0]			

Pedestal not present:

0 = 7.5 IRE pedestal is present on the analog video input signal (default)
1 = Pedestal is not present on the analog video input signal

VBI raw:

0 = Disabled (default)
1 = Enabled

During the duration of the vertical blanking as defined by the VBLK start and stop line registers at subaddresses 22h through 25h (see Sections 2.11.22 and 2.11.23), the chroma samples are replaced by luma samples. This feature can be used to support VBI processing performed by an external device during the vertical blanking interval. In order to use this bit, the output format must be 10-bit ITU-R BT.656 mode.

Luminance signal delay [3:0]: Luminance signal delays with respect to the chroma signal in 1× pixel clock increments.

0111 = Reserved
0110 = 6-pixel delay
0001 = 1-pixel delay
0000 = 0 delay (default)
1111 = –1-pixel delay
1000 = –8-pixel delay

2.11.8 Luminance Processing Control 2 Register

Subaddress	07h
Default	00h

7	6	5	4	3	2	1	0
Luma filter select [1:0]		Reserved		Peaking gain [1:0]		Reserved	

Luma filter selected [1:0]:

00 = Luminance adaptive comb enabled (default on CVBS)
01 = Luminance adaptive comb disabled (trap filter selected)
10 = Luma comb/trap filter bypassed (default on S-video, component mode, and SECAM)
11 = Reserved

Peaking gain [1:0]:

00 = 0 (default)
01 = 0.5
10 = 1
11 = 2

2.11.9 Luminance Processing Control 3 Register

Subaddress	08h
Default	02h

7	6	5	4	3	2	1	0
Reserved						Trap filter select [1:0]	

Trap filter select [1:0] selects one of the four trap filters to produce the luminance signal by removing the chrominance signal from the composite video signal. The stop band of the chroma trap filter is centered at the chroma subcarrier frequency with the stop-band bandwidth controlled by the two control bits.

Trap filter stop-band bandwidth (MHz):

Filter select [1:0]	NTSC ITU-R BT.601	NTSC square pixel	PAL ITU-R BT.601	PAL square pixel
00 =	1.2129	1.1026	1.2129	1.3252
01 =	0.8701	0.7910	0.8701	0.9507
10 = (default)	0.7183	0.6712	0.7383	0.8066
11 =	0.5010	0.4554	0.5010	0.5474

2.11.10 Luminance Brightness Register

Subaddress	09h
Default	80h

7	6	5	4	3	2	1	0
Brightness [7:0]							

Brightness [7:0]: This register works for CVBS, S-video, and component video luminance.

1111 1111 = 255 (bright)
1000 0000 = 128 (default)
0000 0000 = 0 (dark)

2.11.11 Luminance Contrast Register

Subaddress	0Ah
Default	80h

7	6	5	4	3	2	1	0
Contrast [7:0]							

Contrast [7:0]: This register works for CVBS, S-video, and component video luminance.

1111 1111 = 255 (maximum contrast)
1000 0000 = 128 (default)
0000 0000 = 0 (minimum contrast)

2.11.12 Chrominance Saturation Register

Subaddress	0Bh
Default	80h

7	6	5	4	3	2	1	0
Saturation [7:0]							

Saturation [7:0]: This register works for CVBS, S-video, and component video luminance.

1111 1111 = 255 (maximum)
1000 0000 = 128 (default)
0000 0000 = 0 (no color)

2.11.13 Chroma Hue Register

Subaddress	0Ch
Default	00h

7	6	5	4	3	2	1	0
Hue [7:0]							

Hue [7:0] (does not apply to component video)

0111 1111 = +180 degrees
0000 0000 = 0 degrees (default)
1000 0000 = –180 degrees

2.11.14 Chrominance Processing Control 1 Register

Subaddress	0Dh
Default	00h

7	6	5	4	3	2	1	0
Reserved			Color PLL reset	Chrominance adaptive comb enable	Reserved	Automatic color gain control [1:0]	

Color PLL reset:

0 = Color subcarrier PLL not reset (default)
1 = Color subcarrier PLL reset

Chrominance adaptive comb enable: This bit is effective on composite video only.

0 = Enabled (default)
1 = Disabled

Automatic color gain control (ACGC) [1:0]:

00= ACGC enabled (default)
01 = Reserved
10= ACGC disabled, ACGC set to the nominal value
11= ACGC frozen to the previous set value

2.11.15 Chrominance Processing Control 2 Register

Subaddress	0Eh
Default	0Eh

7	6	5	4	3	2	1	0
Reserved				PAL compensation	WCF	Chrominance filter select [1:0]	

PAL compensation:

0 = Disabled
1 = Enabled (default)

Wideband chroma LPF filter (WCF):

0 = Disabled
1 = Enabled (default)

Chrominance filter select [1:0]:

00 = Disabled
01 = Notch 1
10 = Notch 2 (default)
11 = Notch 3

See Figure 2–8 through Figure 2–11 for characteristics.

2.11.16 AVID Start Pixel Register

Subaddress	16h–17h
Default	055h

Subaddress	7	6	5	4	3	2	1	0
16h	AVID start [7:0]							
17h	Reserved			AVID active	Reserved		AVID start [9:8]	

AVID active:

0 = AVID out active in VBLK (default)
1 = AVID out inactive in VBLK

AVID start [9:0]: AVID start pixel number, this is an absolute pixel location from HSYNC start pixel 0.

	NTSC 601	NTSC Sqp	PAL 601	PAL Sqp
default	85 (55h)	86 (56h)	88 (58h)	103 (67h)

The TVP5147 decoder updates the AVID start only when the AVID start MSB byte is written to. If the user changes these registers, then the TVP5147 decoder retains values in different modes until this device resets. The AVID start pixel register also controls the position of the SAV code.

2.11.17 AVID Stop Pixel Register

Subaddress	18h–19h
Default	325h

Subaddress	7	6	5	4	3	2	1	0
18h	AVID stop [7:0]							
19h	Reserved						AVID stop [9:8]	

AVID stop [9:0]: AVID stop pixel number. The number of pixels of active video must be an even number. This is an absolute pixel location from HSYNC start pixel 0.

	NTSC 601	NTSC Sqp	PAL 601	PAL Sqp
default	805 (325h)	726 (2D6h)	808 (328h)	696 (2B8h)

The TVP5147 decoder updates the AVID stop only when the AVID stop MSB byte is written to. If the user changes these registers, then the TVP5147 decoder retains values in different modes until this device resets. The AVID start pixel register also controls the position of the EAV code.

2.11.18 HSYNC Start Pixel Register

Subaddress	1Ah–1Bh
Default	000h

Subaddress	7	6	5	4	3	2	1	0
1Ah	HSYNC start [7:0]							
1Bh	Reserved						HSYNC start [9:8]	

HSYNC start pixel [9:0]: This is an absolute pixel location from HSYNC start pixel 0.
The TVP5147 decoder updates the HSYNC start only when the HSYNC start MSB is written to. If the user changes these registers, then the TVP5147 decoder retains values in different modes until this device resets.

2.11.19 HSYNC Stop Pixel Register

Subaddress	1Ch–1Dh
Default	040h

Subaddress	7	6	5	4	3	2	1	0
1Ch	HSYNC stop [7:0]							
1Dh	Reserved						HSYNC stop [9:8]	

HSYNC stop [9:0]: This is an absolute pixel location from HSYNC start pixel 0.
The TVP5147 decoder updates the HSYNC stop only when the HSYNC stop MSB is written to. If the user changes these registers, then the TVP5147 decoder retains values in different modes until this device resets.

2.11.20 VSYNC Start Line Register

Subaddress	1Eh–1Fh
Default	004h

Subaddress	7	6	5	4	3	2	1	0
1Eh	VSYNC start [7:0]							
1Fh	Reserved						VSYNC start [9:8]	

VSYNC start [9:0]: This is an absolute line number. The TVP5147 decoder updates the VSYNC start only when the VSYNC start MSB is written to. If the user changes these registers, then the TVP5147 decoder retains values in different modes until this decoder resets.
NTSC: default 004h PAL: default 001h

2.11.21 VSYNC Stop Line Register

Subaddress	20h–21h
Default	007h

Subaddress	7	6	5	4	3	2	1	0
20h	VSYNC stop [7:0]							
21h	Reserved						VSYNC stop [9:8]	

VSYNC stop [9:0]: This is an absolute line number. The TVP5147 decoder updates the VSYNC stop only when the VSYNC stop MSB is written to. If the user changes these registers, the TVP5147 decoder retains values in different modes until this decoder resets.
NTSC: default 007h PAL: default 004h

2.11.22 VBLK Start Line Register

Subaddress	22h–23h
Default	001h

Subaddress	7	6	5	4	3	2	1	0
22h	VBLK start [7:0]							
23h	Reserved						VBLK start [9:8]	

VBLK start [9:0]: This is an absolute line number. The TVP5147 decoder updates the VBLK start line only when the VBLK start MSB is written to. If the user changes these registers, the TVP5147 decoder retains values in different modes until this resets (see Section 2.11.16)
NTSC: default 001h PAL: default 623 (26Fh)

2.11.23 VBLK Stop Line Register

Subaddress	24h–25h
Default	015h

Subaddress	7	6	5	4	3	2	1	0
24h	VBLK stop [7:0]							
25h	Reserved						VBLK stop [9:8]	

VBLK stop [9:0]: This is an absolute line number. The TVP5147 decoder updates the VBLK stop only when the VBLK stop MSB is written to. If the user changes these registers, then the TVP5147 decoder retains values in different modes until this device resets (see Section 2.11.16).
NTSC: default 21 (015h) PAL: default 23 (017h)

2.11.24 CTI Delay Register

Subaddress	2Dh
Default	00h

7	6	5	4	3	2	1	0
Reserved					CTI delay [2:0]		

CTI delay [2:0]: Sets the delay of the Y channel with respect to Cb/Cr in the CTI block

011 = 3-pixel delay
001 = 1-pixel delay
000 = 0 delay (default)
111 = –1-pixel delay
100 = –4-pixel delay

2.11.25 CTI Control Register

Subaddress	2Eh
Default	00h

7	6	5	4	3	2	1	0
CTI coring [3:0]				CTI gain [3:0]			

CTI coring [3:0]: 4-bit CTI coring limit control value, unsigned linear control range from 0 to ±60, step size = 4

1111 = ±60
0001 = ±4
0000 = 0 (default)

CTI gain [3:0]: 4-bit CTI gain control values, unsigned linear control range from 0 to 15/16, step size = 1/16

1111 = 15/16
0001 = 1/16
0000 = 0 disabled (default)

2.11.26 RTC Register

Subaddress	31h
Default	05h

7	6	5	4	3	2	1	0
Reserved					Genlock [2:0]		

Genlock [2:0]:

000 = Reserved
001 = Reserved
010 = Reserved
011 = Reserved
100 = Reserved
101 = RTC mode
110 = Reserved
111 = Reserved

2.11.27 Sync Control Register

Subaddress	32h
Default	00h

7	6	5	4	3	2	1	0
Reserved			Polarity FID	Polarity VS	Polarity HS	VS/VBLK	HS/CS

Polarity FID: determines polarity of FID terminal

0 = First field high, second field low (default)
1 = First field low, second field high

Polarity VS: determines polarity of VS terminal

0 = Active low (default)
1 = Active high

Polarity HS: determines polarity of HS terminal

0 = Active low (default)
1 = Active high

VS or VBLK:

0 = VS terminal outputs vertical sync (default)
1 = VS terminal outputs vertical blank

HS or CS:

0 = HS terminal outputs horizontal sync (default)
1 = HS terminal outputs composite sync

2.11.28 Output Formatter 1 Register

Subaddress	33h
Default	40h

7	6	5	4	3	2	1	0
Sampling rate	YCbCr code range	CbCr code	Reserved		Output format [2:0]		

Sampling rate (changing this bit causes the register settings to be reinitialized):

0 = ITU-R BT.601 sampling rate (default)
1 = Square pixel sampling rate

YCbCr output code range:

0 = ITU-R BT.601 coding range (Y ranges from 64 to 940. Cb and Cr range from 64 to 960.)
1 = Extended coding range (Y, Cb, and Cr range from 4 to 1016.) (default)

CbCr code format:

0 = Offset binary code (2s complement + 512) (default)
1 = Straight binary code (2s complement)

Output format [2:0]:

000 = 10-bit 4:2:2 (pixel x 2 rate) with embedded syncs (ITU-R BT.656) (default)
001 = 20-bit 4:2:2 (pixel rate) with separate syncs
010 = Reserved
011 = 10-bit 4:2:2 with separate syncs
100–111= Reserved

NOTE: 10-bit mode is also used for the raw VBI output mode when bit 4 (VBI raw) in the luminance processing control 1 register at subaddress 06h is set (see Section 2.11.7).

2.11.29 Output Formatter 2 Register

Subaddress	34h
Default	00h

7	6	5	4	3	2	1	0
Reserved			Data enable	Black Screen [1:0]		CLK polarity	Clock enable

Data enable: Y[9:0] AND C[9:0] output enable

0 = Y[9:0] and C[9:0] high impedance (default)
1 = Y [9:0] and C[9:0] active

Black Screen [1:0]:

00 = Normal operation (default)
01 = Black screen out when TVP5147 detects lost lock (using with tuner input but not with VCR)
10 = Black screen out
11 = Black screen out

CLK polarity:

0 = Data clocked out on the falling edge of DATACLK (default)
1 = Data clocked out on the rising edge of DATACLK

Clock enable:

0 = DATACLK outputs are high-impedance (default).
1 = DATACLK outputs are enabled.

2.11.30 Output Formatter 3 Register

Subaddress	35h
Default	FFh

7	6	5	4	3	2	1	0
GPIO [1:0]		AVID [1:0]		GLCO [1:0]		FID [1:0]	

GPIO [1:0]: FSS terminal function select

00 = GPIO is logic 0 output.
01 = GPIO is logic 1 output.
10 = Reserved
11 = GPIO is logic input (default).

AVID [1:0]: AVID terminal function select

00 = AVID is logic 0 output.
01 = AVID is logic 1 output.
10 = AVID is active video indicator output.
11 = AVID is logic input (default).

GLCO [1:0]: GLCO terminal function select

00 = GLCO is logic 0 output.
01 = GLCO is logic 1 output.
10 = GCLO is genlock output.
11 = GCLO is logic input (default).

FID [1:0]: FID terminal function select

00 = FID is logic 0 output.
01 = FID is logic 1 output.
10 = FID is FID output.
11 = FID is logic input (default).

2.11.31 Output Formatter 4 Register

Subaddress	36h
Default	FFh

7	6	5	4	3	2	1	0
VS/VBLK [1:0]		HS/CS [1:0]		C_1 [1:0]		C_0 [1:0]	

VS/VBLK [1:0]: VS terminal function select

00 = VS/VBLK is logic 0 output.
01 = VS/VBLK is logic 1 output.
10 = VS/VBLK is vertical sync or vertical blank output corresponding to bit 1 (VS/VBLK) in the sync control register at subaddress 32h (see Section 2.11.27).
11 = VS/VBLK is logic input (default).

HS/CS [1:0]: HS terminal function select

00 = HS/CS is logic 0 output.
01 = HS/CS is logic 1 output.
10 = HS/CS is horizontal sync or composite sync output corresponding to bit 0 (HS/CS) in the sync control register at subaddress 32h (see Section 2.11.27).
11 = HS/CS is logic input (default).

C_1 [1:0]: C_1 terminal function select

00 = C_1 is logic 0 output.
01 = C_1 is logic 1 output.
10 = Reserved
11 = C_1 is logic input (default).

C_0 [1:0]: C_0 terminal function select

00 = C_0 is logic 0 output.
01 = C_0 is logic 1 output.
10 = Reserved
11 = C_0 is logic input (default).

C_x functions are only available in the 10-bit output mode.

2.11.32 Output Formatter 5 Register

Subaddress	37h
Default	FFh

7	6	5	4	3	2	1	0
C_5 [1:0]		C_4 [1:0]		C_3 [1:0]		C_2 [1:0]	

C_5 [1:0]: C_5 terminal function select

00 = C_5 is logic 0 output.
01 = C_5 is logic 1 output.
10 = Reserved
11 = C_5 is logic input (default).

C_4 [1:0]: C_4 terminal function select

00 = C_4 is logic 0 output.
01 = C_4 is logic 1 output.
10 = Reserved
11 = C_4 is logic input (default).

C_3 [1:0]: C_3 terminal function select

00 = C_3 is logic 0 output.
01 = C_3 is logic 1 output.
10 = Reserved
11 = C_3 is logic input (default).

C_2 [1:0]: C_2 terminal function select

00 = C_2 is logic 0 output.
01 = C_2 is logic 1 output.
10 = Reserved
11 = C_2 is logic input (default).

C_x functions are only available in the 10-bit output mode.

2.11.33 Output Formatter 6 Register

Subaddress	38h
Default	FFh

7	6	5	4	3	2	1	0
C_9 [1:0]		C_8 [1:0]		C_7 [1:0]		C_6 [1:0]	

C_9 [1:0]: C_9 terminal function select

00 = C_9 is logic 0 output.
01 = C_9 is logic 1 output.
10 = Reserved
11 = C_9 is logic input (default).

C_8 [1:0]: C_8 terminal function select

00 = C_8 is logic 0 output.
01 = C_8 is logic 1 output.
10 = Reserved
11 = C_8 is logic input (default).

C_7 [1:0]: C_7 terminal function select

00 = C_7 is logic 0 output.
01 = C_7 is logic 1 output.
10 = Reserved
11 = C_7 is logic input (default).

C_6 [1:0]: C_6 terminal function select

00 = C_6 is logic 0 output.
01 = C_6 is logic 1 output.
10 = Reserved
11 = C_6 is logic input (default).

C_x functions are only available in the 10-bit output mode.

2.11.34 Clear Lost Lock Detect Register

Subaddress	39h
Default	00h

7	6	5	4	3	2	1	0
Reserved							Clear lost lock detect

Clear lost lock detect: Clear bit 4 (lost lock detect) in the status 1 register at subaddress 3Ah (see Section 2.11.35)

0 = No effect (default)
1 = Clears bit 4 in the status 1 register

2.11.35 Status 1 Register

Subaddress	3Ah

Read only

7	6	5	4	3	2	1	0
Peak white detect status	Line-alternating status	Field rate status	Lost lock detect	Color subcarrier lock status	Vertical sync lock status	Horizontal sync lock status	TV/VCR status

Peak white detect status:

0 = Peak white is not detected.
1 = Peak white is detected.

Line-alternating status:

0 = Nonline-alternating
1 = Line-alternating

Field rate status:

0 = 60 Hz
1 = 50 Hz

Lost lock detect:

0 = No lost lock since this bit was cleared.
1 = Lost lock since this bit was cleared.

Color subcarrier lock status:

0 = Color subcarrier is not locked.
1 = Color subcarrier is locked.

Vertical sync lock status:

0 = Vertical sync is not locked.
1 = Vertical sync is locked.

Horizontal sync lock status:

0 = Horizontal sync is not locked.
1 = Horizontal sync is locked.

TV/VCR status:

0 = TV
1 = VCR

2.11.36 Status 2 Register

Subaddress	3Bh

Read only

7	6	5	4	3	2	1	0
Signal present	Weak signal detection	PAL switch polarity	Field sequence status	Reserved	Macrovision detection [2:0]		

Signal present detection:

0 = Signal not present
1 = Signal present

Weak signal detection:

0 = No weak signal
1 = Weak signal mode

PAL switch polarity of first line of odd field:

0 = PAL switch is zero.
1 = PAL switch is one.

Field sequence status:

0 = Even field
1 = Odd field

Macrovision detection [2:0]:

000 = No copy protection
001 = AGC pulses/pseudo syncs present (type 1)
010 = 2-line color stripe only present
011 = AGC pulses/pseudo syncs and 2-line color stripe present (type 2)
100 = Reserved
101 = Reserved
110 = 4-line color stripe only present
111 = AGC pulses/pseudo syncs and 4-line color stripe present (type 3)

2.11.37 AGC Gain Status Register

Subaddress	3Ch–3Dh

Read only

Subaddress	7	6	5	4	3	2	1	0
3Ch	Fine gain [7:0]							
3Dh	Coarse gain [3:0]				Fine gain [11:8]			

Fine gain [11:0]: This register provides the fine gain value of sync channel.

1111 1111 1111 = 1.9995
1000 0000 0000 = 1
0010 0000 0000 = 0.5

Coarse gain [3:0]: This register provides the coarse gain value of sync channel.

1111 = 2
0101 = 1
0000 = 0.5

These AGC gain status registers are updated automatically by the TVP5147 decoder with AGC on. In manual gain control mode, these register values are not updated by the TVP5147 decoder.

2.11.38 Video Standard Status Register

Subaddress	3Fh

Read only

7	6	5	4	3	2	1	0
Autoswitch	Reserved				Video standard [2:0]		

Autoswitch mode:

0 = Stand-alone (forced video standard) mode
1 = Autoswitch mode

Video standard [2:0]:

	CVBS and S-video	Component video
000 =	Reserved	Reserved
001 =	(M, J) NTSC	Component 525
010 =	(B, D, G, H, I, N) PAL	Component 625
011 =	(M) PAL	Reserved
100 =	(Combination-N) PAL	Reserved
101 =	NTSC 4.43	Reserved
110 =	SECAM	Reserved
111 =	PAL 60	Reserved

This register contains information about the detected video standard that the device is currently operating. When autoswitch code is running, this register must be tested to determine which video standard has been detected.

2.11.39 GPIO Input 1 Register

Subaddress	40h

Read only

7	6	5	4	3	2	1	0
C_7	C_6	C_5	C_4	C_3	C_2	C_1	C_0

C_x input status:

0 = Input is a low.
1 = Input is a high.

These status bits are only valid when terminals are used as input and its states updated at every line.

2.11.40 GPIO Input 2 Register

Subaddress	41h

Read only

7	6	5	4	3	2	1	0
GPIO	AVID	GLCO	VS	HS	FID	C_9	C_8

GPIO input terminal status:

0 = Input is a low.
1 = Input is a high.

AVID input terminal status:

0 = Input is a low.
1 = Input is a high.

GLCO input terminal status:

0 = Input is a low.
1 = Input is a high.

VS input terminal status:

0 = Input is a low.
1 = Input is a high.

HS input status:

0 = Input is a low.
1 = Input is a high.

FID input status:

0 = Input is a low.
1 = Input is a high.

C_x input status:

0 = Input is a low.
1 = Input is a high.

These status bits are only valid when terminals are used as input and its states updated at every line.

2.11.41 Vertical Line Count Register

Subaddress	42h–43h

Read only

Subaddress	7	6	5	4	3	2	1	0
42h	Vertical line [7:0]							
43h	Reserved						Vertical line [9:8]	

Vertical line [9:0] represents the detected total number of lines from the previous frame. This can be used with nonstandard video signals, such as a VCR in trick mode, to synchronize downstream video circuitry.

2.11.42 AFE Coarse Gain for CH 1 Register

Subaddress	46h
Default	20h

7	6	5	4	3	2	1	0
CGAIN 1 [3:0]				Reserved			

CGAIN 1 [3:0]: Coarse_Gain = 0.5 + (CGAIN 1)/10, where 0 ≤ CGAIN 1 ≤ 15
This register works only in manual gain control mode. When AGC is active, writing to any value is ignored.

1111 = 2
1110 = 1.9
1101 = 1.8
1100 = 1.7
1011 = 1.6
1010 = 1.5
1001 = 1.4
1000 = 1.3
0111 = 1.2
0110 = 1.1
0101 = 1
0100 = 0.9
0011 = 0.8
0010 = 0.7 (default)
0001 = 0.6
0000 = 0.5

2.11.43 AFE Coarse Gain for CH 2 Register

Subaddress	47h
Default	20h

7	6	5	4	3	2	1	0
CGAIN 2 [3:0]				Reserved			

CGAIN 2 [3:0]: Coarse_Gain = 0.5 + (CGAIN 2)/10, where 0 ≤ CGAIN 2 ≤ 15
This register works only in manual gain control mode. When AGC is active, writing to any value is ignored.

1111 = 2
1110 = 1.9
1101 = 1.8
1100 = 1.7
1011 = 1.6
1010 = 1.5
1001 = 1.4
1000 = 1.3
0111 = 1.2
0110 = 1.1
0101 = 1
0100 = 0.9
0011 = 0.8
0010 = 0.7 (default)
0001 = 0.6
0000 = 0.5

2.11.44 AFE Coarse Gain for CH 3 Register

Subaddress	48h
Default	20h

7	6	5	4	3	2	1	0
CGAIN 3 [3:0]				Reserved			

CGAIN 3 [3:0]: Coarse_Gain = 0.5 + (CGAIN 3)/10, where 0 ≤ CGAIN 3 ≤ 15
This register works only in the manual gain control mode. When AGC is active, writing to any value is ignored.

1111 = 2
1110 = 1.9
1101 = 1.8
1100 = 1.7
1011 = 1.6
1010 = 1.5
1001 = 1.4
1000 = 1.3
0111 = 1.2
0110 = 1.1
0101 = 1
0100 = 0.9
0011 = 0.8
0010 = 0.7 (default)
0001 = 0.6
0000 = 0.5

2.11.45 AFE Coarse Gain for CH 4 Register

Subaddress	49h
Default	20h

7	6	5	4	3	2	1	0
CGAIN 4 [3:0]				Reserved			

CGAIN 4 [3:0]: Coarse_Gain = 0.5 + (CGAIN 4)/10, where 0 ≤ CGAIN 4 ≤ 15
This register works only in the manual gain control mode. When AGC is active, writing to any value is ignored.

1111 = 2
1110 = 1.9
1101 = 1.8
1100 = 1.7
1011 = 1.6
1010 = 1.5
1001 = 1.4
1000 = 1.3
0111 = 1.2
0110 = 1.1
0101 = 1
0100 = 0.9
0011 = 0.8
0010 = 0.7 (default)
0001 = 0.6
0000 = 0.5

2.11.46 AFE Fine Gain for Pb Register

Subaddress	4Ah–4Bh
Default	900h

Subaddress	7	6	5	4	3	2	1	0
4Ah	FGAIN 1 [7:0]							
4Bh	Reserved					FGAIN 1 [11:8]		

FGAIN 1 [11:0]: This fine gain applies to component Pb.

Fine_Gain = (1/2048) * FGAIN 1, where 0 ≤ FGAIN 1 ≤ 4095

This register works only in manual gain control mode. When AGC is active, writing to any value is ignored.

1111 1111 1111 = 1.9995
1100 0000 0000 = 1.5
1001 0000 0000 = 1.125 (default)
1000 0000 0000 = 1
0100 0000 0000 = 0.5
0011 1111 1111 to 0000 0000 0000 = Reserved

2.11.47 AFE Fine Gain for Y_Chroma Register

Subaddress	4Ch–4Dh
Default	900h

Subaddress	7	6	5	4	3	2	1	0
4Ch	FGAIN 2 [7:0]							
4Dh	Reserved					FGAIN 2 [11:8]		

FGAIN 2 [11:0]: This gain applies to component Y channel or S-video chroma (see AFE fine gain for Pb register, Section 2.11.46).

This register works only in manual gain control mode. When AGC is active, writing to any value is ignored.

1111 1111 1111 = 1.9995
1100 0000 0000 = 1.5
1001 0000 0000 = 1.125 (default)
1000 0000 0000 = 1
0100 0000 0000 = 0.5
0011 1111 1111 to 0000 0000 0000 = Reserved

2.11.48 AFE Fine Gain for Pr Register

Subaddress	4Eh–4Fh
Default	900h

Subaddress	7	6	5	4	3	2	1	0
4Eh	FGAIN 3 [7:0]							
4Fh	Reserved					FGAIN 3 [11:8]		

FGAIN 3 [11:0]: This fine gain applies to component Pr (see AFE fine gain for Pb register, Section 2.11.46).

This register works only in manual gain control mode. When AGC is active, writing to any value is ignored.

1111 1111 1111 = 1.9995
1100 0000 0000 = 1.5
1001 0000 0000 = 1.125 (default)
1000 0000 0000 = 1
0100 0000 0000 = 0.5
0011 1111 1111 to 0000 0000 0000 = Reserved

2.11.49 AFE Fine Gain for CVBS_Luma Register

Subaddress	50h–51h
Default	900h

Subaddress	7	6	5	4	3	2	1	0
50h	FGAIN 4 [7:0]							
51h	Reserved				FGAIN 4 [11:8]			

FGAIN 4 [11:0]: This fine gain applies to CVBS or S-video luma (see AFE fine gain for Pb register, Section 2.11.46).

This register works only in manual gain control mode. When AGC is active, writing to any value is ignored.

1111 1111 1111 = 1.9995
1100 0000 0000 = 1.5
1001 0000 0000 = 1.125 (default)
1000 0000 0000 = 1
0100 0000 0000 = 0.5
0011 1111 1111 to 0000 0000 0000 = Reserved

2.11.50 Field ID Control Register

Subaddress	57h
Default	00h

7	6	5	4	3	2	1	0
						656 version	FID control

656 Version

0 = ITU-R BT.656-4 (default)
1 = ITU-R BT.656-3

FID control

0 = 0→1 adapts to field 1, 1→0 adapts to field 1+ field 2 (default)
1 = 0→1 adapts to field 2, 1→0 adapts to field 1+ field 2 (for TVP5147 EVM)

2.11.51 ROM Version Register

Subaddress	70h

Read only

7	6	5	4	3	2	1	0
ROM version [7:0]							

ROM Version [7:0]: ROM revision number

2.11.52 AGC White Peak Processing Register

Subaddress	74h
Default	00h

7	6	5	4	3	2	1	0
Luma peak A	Reserved	Color burst A	Sync height A	Luma peak B	Composite peak	Color burst B	Sync height B

Luma peak A: Use of the luma peak as a video amplitude reference for the back-end feed-forward type AGC algorithm.

0 = Enabled (default)
1 = Disabled

Color burst A: Use of the color burst amplitude as a video amplitude reference for the back end.

NOTE: Not available for SECAM, component, and B/W video sources.

0 = Enabled (default)
1 = Disabled

Sync height A: Use of the sync height as a video amplitude reference for the back-end feed-forward type AGC algorithm.

0 = Enabled (default)
1 = Disabled

Luma peak B: Use of the luma peak as a video amplitude reference for the front-end feedback type AGC algorithm.

0 = Enabled (default)
1 = Disabled

Composite peak: Use of the composite peak as a video amplitude reference for the front-end feedback type AGC algorithm.

NOTE: Required for CVBS video sources.

0 = Enabled (default)
1 = Disabled

Color burst B: Use of the color burst amplitude as a video amplitude reference for the front-end feedback type AGC algorithm.

NOTE: Not available for SECAM, component, and B/W video sources.

0 = Enabled (default)
1 = Disabled

Sync height B:
Use of the sync height as a video amplitude reference for the front-end feedback type AGC algorithm.

0 = Enabled (default)
1 = Disabled

NOTE: If all 4 bits of the lower nibble are set to logic 1 (that is, no amplitude reference selected), then the front-end analog and digital gains are automatically set to nominal values of 2 and 2304, respectively.

If all 4 bits of the upper nibble are set to logic 1 (that is, no amplitude reference selected), then the back-end gain is set automatically to unity.

If the input sync height is greater than 100% and the AGC-adjusted output video amplitude becomes less than 100%, then the back-end scale factor attempts to increase the contrast in the back end to restore the video amplitude to 100%.

2.11.53 F and V Bit Control Register

Subaddress	75h
Default	12h

7	6	5	4	3	2	1	0
2 line delay	Stable HS	Line limit	Fast lock	F and V [1:0]		Phase Det.	HPLL

2-line delay: Enable bypass of internal 2-line delay when in VCR mode

0 = Disabled (default)
1 = Enabled

Stable HSYNC: Enable work around code which stabilizes horizontal sync in VCR mode

0 = Disabled (default)
1 = Enabled

Line limit: Enable ±30 line limit from standard lines per frame on vertical sync PLL adjustment when vertical lock is true.

0 = Disabled (default)
1 = Enabled

Fast lock: Enable fast lock where vertical PLL is reset and a 2 sec timer is initialized when vertical lock is lost; during time-out the detected input VSYNC is output.

0 = Disabled
1 = Enabled (default)

F and V [1:0]

F and V	Lines per frame	F bit	V bit
00 = (default)	Standard	ITU–R BT 656	ITU–R BT 656
	Nonstandard–even	Forced to 1	Switch at field boundary
	Nonstandard–odd	Toggles	Switch at field boundary
01 =	Standard	ITU–R BT 656	ITU–R BT 656
	Nonstandard	Toggles	Switch at field boundary
10 =	Standard	ITU–R BT 656	ITU–R BT 656
	Nonstandard	Pulsed mode	Switch at field boundary
11 =	Reserved		

Phase Detector: Enable integral window phase detector

0 = Disabled
1 = Enabled (default)

HPLL Enable horizontal PLL to free run

0 = Disabled (default)
1 = Enabled

2.11.54 VCR Trick Mode Control Register

Subaddress	76h
Default	8Ah

7	6	5	4	3	2	1	0
Switch header	Horizontal shake threshold [6:0]						

Switch header: When in VCR trick mode, the header noisy area around the head switch is skipped.

0 = Disabled
1 = Enabled (default)

Horizontal shake threshold [6:0]:

000 0000 = Zero threshold
000 1010 = 0Ah (default)
111 1111 = Largest threshold

2.11.55 Horizontal Shake Increment Register

Subaddress	77h
Default	64h

7	6	5	4	3	2	1	0
Horizontal shake increment [7:0]							

Horizontal shake increment [7:0]:

000 0000 =0
000 1010 = 64h (default)
111 1111 = FFh

2.11.56 AGC Increment Speed Register

Subaddress	78h
Default	06h

7	6	5	4	3	2	1	0
Reserved					AGC increment speed [3:0]		

AGC increment speed: Adjusts gain increment speed.

111 = 7 (slowest)
110 = 6 (default)
⋮
000 = 0 (fastest)

2.11.57 AGC Increment Delay Register

Subaddress	79h
Default	1Eh

7	6	5	4	3	2	1	0
AGC increment delay [7:0]							

AGC increment delay: Number of frames to delay gain increments

1111 1111 = 255
⋮
0001 1110 = 30 (default)
⋮
0000 0000 = 0

2.11.58 Analog Output Control 1 Register

Subaddress	7Fh
Default	00h

7	6	5	4	3	2	1	0
Reserved					AGC enable	Input select	Analog Output enable

AGC enable:

0 = Enabled (default)
1 = Disabled, manual gain mode (see Section 2.12.10)

Input select:

00 = Input selected by TVP5147 decoder, (see Section 2.11.1) (default)
01 = Input selected manually (see Section 2.12.10)

Analog output enable:

0 = VI_1_A is input (default).
1 = VI_1_A is analog video output.

2.11.59 Chip ID MSB Register

Subaddress	80h

Read only

7	6	5	4	3	2	1	0
Chip ID MSB [7:0]							

Chip ID MSB [7:0]: This register identifies the MSB of the device ID. Value = 51h

2.11.60 Chip ID LSB Register

Subaddress	81h

Read only

7	6	5	4	3	2	1	0
Chip ID LSB [7:0]							

Chip ID LSB [7:0]: This register identifies the LSB of the device ID. Value = 47h

2.11.61 VDP TTX Filter And Mask Registers

Subaddress	B1h	B2h	B3h	B4h	B5h	B6h	B7h	B8h	B9h	BAh
Default	00h	00h	00h	00h	00h	00h	00h	00h	00h	00h

Subaddress	7	6	5	4	3	2	1	0
B1h	Filter 1 mask 1				Filter 1 pattern 1			
B2h	Filter 1 mask 2				Filter 1 pattern 2			
B3h	Filter 1 mask 3				Filter 1 pattern 3			
B4h	Filter 1 mask 4				Filter 1 pattern 4			
B5h	Filter 1 mask 5				Filter 1 pattern 5			
B6h	Filter 2 mask 1				Filter 2 pattern 1			
B7h	Filter 2 mask 2				Filter 2 pattern 2			
B8h	Filter 2 mask 3				Filter 2 pattern 3			
B9h	Filter 2 mask 4				Filter 2 pattern 4			
BAh	Filter 2 mask 5				Filter 2 pattern 5			

For an NABTS system, the packet prefix consists of five bytes. Each byte contains 4 data bits (D[3:0]) interlaced with 4 Hamming protection bits (H[3:0]):

Bit 7	Bit 6	Bit 5	Bit 4	Bit 3	Bit 2	Bit 1	Bit 0
D[3]	H[3]	D[2]	H[2]	D[1]	H[1]	D[0]	H[0]

Only data portion D[3:0] from each byte is applied to a teletext filter function with corresponding pattern bits P[3:0] and mask bits M[3:0]. The filter ignores the Hamming protection bits.

For WST system (PAL or NTSC), the packet prefix consists of two bytes. The two bytes contain three bits of magazine number (M[2:0]) and five bits of row address (R[4:0]), interlaced with eight Hamming protection bits H[7:0]:

Bit 7	Bit 6	Bit 5	Bit 4	Bit 3	Bit 2	Bit 1	Bit 0
R[0]	H[3]	M[2]	H[2]	M[1]	H[1]	M[0]	H[0]
R[4]	H[7]	R[3]	H[6]	R[2]	H[5]	R[1]	H[4]

The mask bits enable filtering using the corresponding bit in the pattern register. For example, a 1 in the LSB of mask 1 means that the filter module must compare the LSB of nibble 1 in the pattern register to the first data bit on the transaction. If these match, then a true result is returned. A 0 in a bit of mask means that the filter module must ignore that data bit of the transaction. If all 0s are programmed in the mask bits, then the filter matches all patterns returning a true result (default 00h).

2.11.62 VDP TTX Filter Control Register

Subaddress	BBh
Default	00h

7	6	5	4	3	2	1	0
Reserved			Filter logic [1:0]		Mode	TTX filter 2 enable	TTX filter 1 enable

Filter logic [1:0]: Allow different logic to be applied when combining the decision of filter 1 and filter 2 as follows:

00 = NOR (default)
01 = NAND
10 = OR
11 = AND

Mode: indicates which teletext mode is in use.

0 = Teletext filter applies to 2 header bytes (default)
1 = Teletext filter applies to 5 header bytes

TTX filter 2 enable: provides for enabling the teletext filter function within the VDP.

0 = Disabled (default)
1 = Enabled

TTX filter 1 enable: provides for enabling the teletext filter function within the VDP.

0 = Disabled (default)
1 = Enabled

If the filter matches or if the filter mask is all 0s, then a true result is returned.

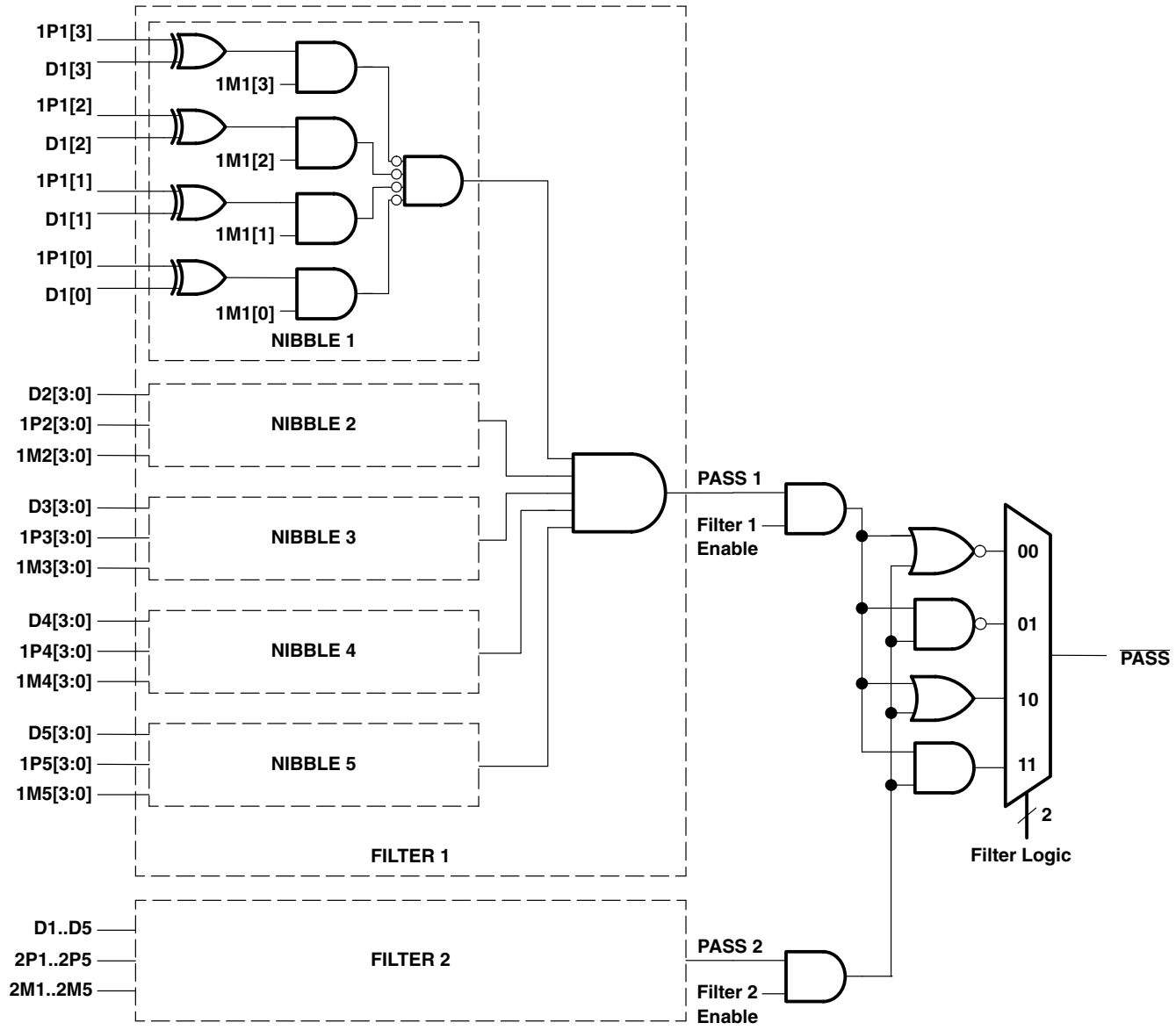

Figure 2–25. Teletext Filter Function

2.11.63 VDP FIFO Word Count Register

Subaddress	BCh

Read only

7	6	5	4	3	2	1	0
FIFO word count [7:0]							

FIFO word count [7:0]: This register provides the number of words in the FIFO.

NOTE: 1 word equals 2 bytes.

2.11.64 VDP FIFO Interrupt Threshold Register

Subaddress	BDh
Default	80h

7	6	5	4	3	2	1	0
Threshold [7:0]							

Threshold [7:0]: This register is programmed to trigger an interrupt when the number of words in the FIFO exceeds this value.

NOTE: 1 word equals 2 bytes.

2.11.65 VDP FIFO Reset Register

Subaddress	BFh
Default	00h

7	6	5	4	3	2	1	0
Reserved							FIFO reset

FIFO reset: Writing any data to this register clears the FIFO and VDP data register (CC, WSS, VITC and VPS). After clearing, this register is automatically cleared.

2.11.66 VDP FIFO Output Control Register

Subaddress	C0h
Default	00h

7	6	5	4	3	2	1	0
Reserved							Host access enable

Host access enable: This register is programmed to allow the host port access to the FIFO or to allow all VDP data to go out the video output.

0 = Output FIFO data to the video output Y[9:2] (default)
1 = Allow host port access to the FIFO data

2.11.67 VDP Line Number Interrupt Register

Subaddress	C1h
Default	00h

7	6	5	4	3	2	1	0
Field 1 enable	Field 2 enable	Line number [5:0]					

Field 1 interrupt enable:

0 = Disabled (default)
1 = Enabled

Field 2 interrupt enable:

0 = Disabled (default)
1 = Enabled

Line number [5:0]: Interrupt line number (default 00h)

This register is programmed to trigger an interrupt when the video line number exceeds this value in bits [5:0]. This interrupt must be enabled at address F4h.

NOTE: The line number value of 0 or 1 is invalid and does not generate an interrupt.

2.11.68 VDP Pixel Alignment Register

Subaddress	C2h–C3h
Default	01Eh

Subaddress	7	6	5	4	3	2	1	0
C2h	Pixel alignment [7:0]							
C3h	Reserved						Pixel alignment [9:8]	

Pixel alignment [9:8]: These registers form a 10-bit horizontal pixel position from the falling edge of horizontal sync, where the VDP controller initiates the program from one line standard to the next line standard, for example, the previous line of teletext to the next line of closed caption. This value must be set so that the switch occurs after the previous transaction has cleared the delay in the VDP, but early enough to allow the new values to be programmed before the current settings are required.

The default value is 0x1E and has been tested with every standard supported here. A new value is needed only if a custom standard is in use.

2.11.69 VDP Line Start Register

Subaddress	D6h
Default	06h

7	6	5	4	3	2	1	0
VDP line start [7:0]							

VDP line start [7:0]: Set the VDP line starting address
This register must be set properly before enabling the line mode registers. The VDP processor works only the VBI region set by this register and the VDP line stop register.

2.11.70 VDP Line Stop Register

Subaddress	D7h
Default	1Bh

7	6	5	4	3	2	1	0
VDP line stop [7:0]							

VDP line stop [7:0]: Set the VDP stop line address

2.11.71 VDP Global Line Mode Register

Subaddress	D8h
Default	FFh

7	6	5	4	3	2	1	0
Global line mode [7:0]							

Global line mode [7:0]: VDP processing for multiple lines set by the VDP start line register at subaddress D6h and the VDP stop line register at subaddress D7h.
Global line mode register has the same bit definition as the general line mode registers.
General line mode has priority over the global line mode.

2.11.72 VDP Full Field Enable Register

Subaddress	D9h
Default	00h

7	6	5	4	3	2	1	0
Reserved							Full field enable

Full field enable:

0 = Disabled full field mode (default)
1 = Enabled full field mode

This register enables the full field mode. In this mode, all lines outside the vertical blank area and all lines in the line mode register programmed with FFh are sliced with the definition of the VDP full field mode register at subaddress DAh. Values other than FFh in the line mode registers allow a different slice mode for that particular line.

2.11.73 VDP Full Field Mode Register

Subaddress	DAh
Default	FFh

7	6	5	4	3	2	1	0
Full field mode [7:0]							

Full field mode [7:0]:

This register programs the specific VBI standard for full field mode. It can be any VBI standard. Individual line settings take priority over the full field register. This allows each VBI line to be programmed independently but have the remaining lines in full field mode. The full field mode register has the same bit definition as line mode registers (default FFh).
Global line mode has priority over the full field mode.

2.11.74 VBUS Data Access With No VBUS Address Increment Register

Subaddress	E0h
Default	00h

7	6	5	4	3	2	1	0
VBUS data [7:0]							

VBUS data [7:0]: VBUS data register for VBUS single-byte read/write transaction.

2.11.75 VBUS Data Access With VBUS Address Increment Register

Subaddress	E1h
Default	00h

7	6	5	4	3	2	1	0
VBUS data [7:0]							

VBUS data [7:0]: VBUS data register for VBUS multibyte read/write transaction. VBUS address is autoincremented after each data byte read/write.

2.11.76 FIFO Read Data Register

Subaddress	E2h

Read only

7	6	5	4	3	2	1	0
FIFO read data [7:0]							

FIFO read data [7:0]: This register is provided to access VBI FIFO data through the I^2C interface. All forms of teletext data come directly from the FIFO, while all other forms of VBI data can be programmed to come from registers or from the FIFO. If the host port is to be used to read data from the FIFO, then bit 0 (host access enable) in the VDP FIFO output control register at subaddress C0h must be set to 1 (see Section 2.11.66).

2.11.77 VBUS Address Access Register

Subaddress	E8h	E9h	EAh
Default	00h	00h	00h

Subaddress	7	6	5	4	3	2	1	0
E8h	VBUS address [7:0]							
E9h	VBUS address [15:8]							
EAh	VBUS address [23:16]							

VBUS address [23:0]: VBUS is a 24-bit wide internal bus. The user needs to program in these registers the 24-bit address of the internal register to be accessed via host port indirect access mode.

2.11.78 Interrupt Raw Status 0 Register

Subaddress	F0h

Read only

7	6	5	4	3	2	1	0
FIFO THRS	TTX	WSS	VPS	VITC	CC F2	CC F1	Line

FIFO THRS: FIFO threshold passed, unmasked

0 = Not passed
1 = Passed

TTX: Teletext data available unmasked

0 = Not available
1 = Available

WSS: WSS data available unmasked

0 = Not available
1 = Available

VPS: VPS data available unmasked

0 = Not available
1 = Available

VITC: VITC data available unmasked

0 = Not available
1 = Available

CC F2: CC field 2 data available unmasked

0 = Not available
1 = Available

CC F1: CC field 1 data available unmasked

0 = Not available
1 = Available

Line: Line number interrupt unmasked

0 = Not available
1 = Available

The host interrupt raw status 0 and 1 registers represent the interrupt status without applying mask bits.

2.11.79 Interrupt Raw Status 1 Register

Subaddress	F1h

Read only

7	6	5	4	3	2	1	0
Reserved				H/V lock	Macrovision status changed	Standard changed	FIFO full

H/V lock: unmasked

0 = H/V lock status unchanged
1 = H/V lock status changed

Macrovision status changed: unmasked

0 = Macrovision status unchanged
1 = Macrovision status changed

Standard changed: unmasked

0 = Video standard unchanged
1 = Video standard changed

FIFO full: unmasked

0 = FIFO not full
1 = FIFO was full during write to FIFO

The FIFO full error flag is set when the current line of VBI data cannot enter the FIFO. For example, if the FIFO has only 10 bytes left and teletext is the current VBI line, then the FIFO full error flag is set, but no data is written because the entire teletext line does not fit. However, if the next VBI line is closed caption requiring only 2 bytes of data plus the header, then this goes into the FIFO even if the full error flag is set.

2.11.80 Interrupt Status 0 Register

Subaddress	F2h

Read only

7	6	5	4	3	2	1	0
FIFO THRS	TTX	WSS	VPS	VITC	CC F2	CC F1	Line

FIFO THRS: FIFO threshold passed, masked

0 = Not passed
1 = Passed

TTX: Teletext data available masked

0 = Not available
1 = Available

WSS: WSS data available masked

0 = Not available
1 = Available

VPS: VPS data available masked

0 = Not available
1 = Available

VITC: VITC data available masked

0 = Not available
1 = Available

CC F2: CC field 2 data available masked

0 = Not available
1 = Available

CC F1: CC field 1 data available masked

0 = Not available
1 = Available

Line: Line number interrupt masked

0 = Not available
1 = Available

The interrupt status 0 and 1 registers represent the interrupt status after applying mask bits. Therefore, the status bits are the result of a logical AND between the raw status and mask bits. The external interrupt terminal is derived from this register as an OR function of all nonmasked interrupts in this register.

Reading data from the corresponding register does not clear the status flags automatically. These flags are reset using the corresponding bits in interrupt clear 0 and 1 registers.

2.11.81 Interrupt Status 1 Register

Subaddress	F3h

Read only

7	6	5	4	3	2	1	0
Reserved				H/V lock	Macrovision status changed	Standard changed	FIFO full

H/V lock: H/V lock status changed mask

0 = H/V lock status unchanged
1 = H/V lock status changed

Macrovision status changed: Macrovision status changed masked

0 = Macrovision status not changed
1 = Macrovision status changed

Standard changed: Standard changed masked

0 = Video standard not changed
1 = Video standard changed

FIFO full: full status of FIFO masked

0 = FIFO not full
1 = FIFO was full during write to FIFO, see the interrupt mask 1 register at subaddress F5h for details (see Section 2.11.83)

2.11.82 Interrupt Mask 0 Register

Subaddress	F4h
Default	00h

7	6	5	4	3	2	1	0
FIFO THRS	TTX	WSS	VPS	VITC	CC F2	CC F1	Line

FIFO THRS: FIFO threshold passed mask

0 = Disabled (default)
1 = Enabled FIFO_THRES interrupt

TTX: Teletext data available mask

0 = Disabled (default)
1 = Enabled TTX available interrupt

WSS: WSS data available mask

0 = Disabled (default)
1 = Enabled WSS available interrupt

VPS: VPS data available mask

0 = Disabled (default)
1 = Enabled VPS available interrupt

VITC: VITC data available mask

0 = Disabled (default)
1 = Enabled VITC available interrupt

CC F2: CC field 2 data available mask

0 = Disabled (default)
1 = Enabled CC_field 2 available interrupt

CC F1: CC field 1 data available mask

0 = Disabled (default)
1 = Enabled CC_field 1 available interrupt

Line: Line number interrupt mask

0 = Disabled (default)
1 = Enabled Line_INT interrupt

The host interrupt mask 0 and 1 registers can be used by the external processor to mask unnecessary interrupt sources for the interrupt status 0 and 1 register bits, and for the external interrupt terminal. The external interrupt is generated from all nonmasked interrupt flags.

2.11.83 Interrupt Mask 1 Register

Subaddress	F5h
Default	00h

7	6	5	4	3	2	1	0
Reserved				H/V lock	Macrovision status changed	Standard changed	FIFO full

H/V lock: H/V lock status changed masked

0 = H/V lock status unchanged (default)
1 = H/V lock status changed

Macrovision status changed: Macrovision status changed mask

0 = Macrovision status unchanged
1 = Macrovision status changed

Standard changed: Standard changed mask

0 = Disabled (default)
1 = Enabled video standard changed

FIFO full: FIFO full mask

0 = Disabled (default)
1 = Enabled FIFO full interrupt

2.11.84 Interrupt Clear 0 Register

Subaddress	F6h
Default	00h

7	6	5	4	3	2	1	0
FIFO THRS	TTX	WSS	VPS	VITC	CC F2	CC F1	Line

FIFO THRS: FIFO threshold passed clear

0 = No effect (default)
1 = Clear bit 7 (FIFO_THRS) in the interrupt status 0 register at subaddress F2h

TTX: Teletext data available clear

0 = No effect (default)
1 = Clear bit 6 (TTX available) in the interrupt status 0 register at subaddress F2h

WSS: WSS data available clear

0 = No effect (default)
1 = Clear bit 5 (WSS available) in the interrupt status 0 register at subaddress F2h

VPS: VPS data available clear

0 = No effect (default)
1 = Clear bit 4 (VPS available) in the interrupt status 0 register at subaddress F2h

VITC: VITC data available clear

0 = Disabled (default)
1 = Clear bit 3 (VITC available) in the interrupt status 0 register at subaddress F2h

CC F2: CC field 2 data available clear

0 = Disabled (default)
1 = Clear bit 2 (CC field 2 available) in the interrupt status 0 register at subaddress F2h

CC F1: CC field 1 data available clear

0 = Disabled (default)
1 = Clear bit 1 (CC field 1 available) in the interrupt status 0 register at subaddress F2h

Line: Line number interrupt clear

0 = Disabled (default)
1 = Clear bit 0 (line interrupt available) in the interrupt status 0 register at subaddress F2h

The host interrupt clear 0 and 1 registers are used by the external processor to clear the interrupt status bits in the host interrupt status 0 and 1 registers. When no nonmasked interrupts remain set in the registers, the external interrupt terminal also becomes inactive.

2.11.85 Interrupt Clear 1 Register

Subaddress	F7h
Default	00h

7	6	5	4	3	2	1	0
Reserved				H/V lock	Macrovision status changed	Standard changed	FIFO full

H/V lock: Clear H/V lock status changed flag

0 = H/V lock status unchanged
1 = H/V lock status changed

Macrovision status changed: Clear Macrovision status changed flag

0 = No effect (default)
1 = Clear bit 2 (Macrovision status changed) in the interrupt status 1 register at subaddress F3h and the interrupt raw status 1 register at subaddress F1h

Standard changed: Clear standard changed flag

0 = No effect (default)
1 = Clear bit 1 (video standard changed) in the interrupt status 1 register at subaddress F3h and the interrupt raw status 1 register at subaddress F1h

FIFO full: Clear FIFO full flag

0 = No effect (default)
1 = Clear bit 0 (FIFO full flag) in the interrupt status 1 register at subaddress F3h and the interrupt raw status 1 register at subaddress F1h

2.12 VBUS Register Definitions

2.12.1 VDP Closed Caption Data Register

Subaddress	80 051Ch–80 051Fh

Read only

Subaddress	7	6	5	4	3	2	1	0
80 051Ch	Closed caption field 1 byte 1							
80 051Dh	Closed caption field 1 byte 2							
80 051Eh	Closed caption field 2 byte 1							
80 051Fh	Closed caption field 2 byte 2							

These registers contain the closed caption data arranged in bytes per field.

2.12.2 VDP WSS Data Register

Subaddress	80 0520h–80 0526h

WSS NTSC (CGMS):

Read only

Subaddress	7	6	5	4	3	2	1	0	Byte
80 0520h			b5	b4	b3	b2	b1	b0	WSS field 1 byte 1
80 0521h	b13	b12	b11	b10	b9	b8	b7	b6	WSS field 1 byte 2
80 0522h			b19	b18	b17	b16	b15	b14	WSS field 1 byte 3
80 0523h	Reserved								
80 0524h			b5	b4	b3	b2	b1	b0	WSS field 2 byte 1
80 0525h	b13	b12	b11	b10	b9	b8	b7	b6	WSS field 2 byte 2
80 0526h			b19	b18	b17	b16	b15	b14	WSS field 2 byte 3

These registers contain the wide screen signaling data for NTSC.

Bits 0–1 represent word 0, aspect ratio
Bits 2–5 represent word 1, header code for word 2
Bits 6–13 represent word 2, copy control
Bits 14–19 represent word 3, CRC

PAL/SECAM:

Read only

Subaddress	7	6	5	4	3	2	1	0	Byte
80 0520h	b7	b6	b5	b4	b3	b2	b1	b0	WSS field 1 byte 1
80 0521h			b13	b12	b11	b10	b9	b8	WSS field 1 byte 2
80 0522h	Reserved								
80 0523h	Reserved								
80 0524h	b7	b6	b5	b4	b3	b2	b1	b0	WSS field 2 byte 1
80 0525h			b13	b12	b11	b10	b9	b8	WSS field 2 byte 2
80 0526h	Reserved								

PAL/SECAM:

Bits 0–3 represent group 1, aspect ratio
Bits 4–7 represent group 2, enhanced services
Bits 8–10 represent group 3, subtitles
Bits 11–13 represent group 4, others

2.12.3 VDP VITC Data Register

Subaddress	80 052Ch–80 0534h

Read only

Subaddress	7	6	5	4	3	2	1	0
80 052Ch	VITC frame byte 1							
80 052Dh	VITC frame byte 2							
80 052Eh	VITC seconds byte 1							
80 052Fh	VITC seconds byte 2							
80 0530h	VITC minutes byte 1							
80 0531h	VITC minutes byte 2							
80 0532h	VITC hours byte 1							
80 0533h	VITC hours byte 2							
80 0534h	VITC CRC byte							

These registers contain the VITC data.

2.12.4 VDP V-Chip TV Rating Block 1 Register

Subaddress	80 0540h

Read only

7	6	5	4	3	2	1	0
Reserved	14-D	PG-D	Reserved	MA-L	14-L	PG-L	Reserved

TV parental guidelines rating block 1:

14-D: When incoming video program is TV-14-D rated then this bit is set high

PG-D: When incoming video program is TV-PG-D rated then this bit is set high

MA-L: When incoming video program is TV-MA-L rated then this bit is set high

14-L: When incoming video program is TV-14-L rated then this bit is set high

PG-L: When incoming video program is TV-PG-L rated then this bit is set high

2.12.5 VDP V-Chip TV Rating Block 2 Register

Subaddress	80 0541h

Read only

7	6	5	4	3	2	1	0
MA-S	14-S	PG-S	Reserved	MA-V	14-V	PG-V	Y7-FV

TV parental guidelines rating block 2:

MA-S: When incoming video program is TV-MA-S rated then this bit is set high

14-S: When incoming video program is TV-14-S rated then this bit is set high

PG-S: When incoming video program is TV-PG-S rated then this bit is set high

MA-V: When incoming video program is TV-MA-V rated then this bit is set high

14-V: When incoming video program is TV-14-V rated then this bit is set high

PG-V: When incoming video program is TV-PG-S rated then this bit is set high

Y7-FV: When incoming video program is TV-Y7-FV rated then this bit is set high

2.12.6 VDP V-Chip TV Rating Block 3 Register

Subaddress	80 0542h

Read only

7	6	5	4	3	2	1	0
None	TV-MA	TV-14	TV-PG	TV-G	TV-Y7	TV-Y	None

TV parental guidelines rating block 3:

None: no block intended

TV-MA: When incoming video program is TV-MA rated in TV parental guidelines rating then this bit is set high

TV-14: When incoming video program is TV-14 rated in TV parental guidelines rating then this bit is set high

TV-PG: When incoming video program is TV-PG rated in TV parental guidelines rating then this bit is set high

TV-G: When incoming video program is TV-G rated in TV parental guidelines rating then this bit is set high

TV-Y7: When incoming video program is TV-Y7 rated in TV parental guidelines rating then this bit is set high

TV-Y: When incoming video program is TV-G rated in TV parental guidelines rating then this bit is set high

None: no block intended

2.12.7 VDP V-CHIP MPAA Rating Data Register

Subaddress	80 0543h

Read only

7	6	5	4	3	2	1	0
Not Rated	X	NC-17	R	PG-13	PG	G	N/A

MPAA rating block (E5h):

Not rated: When incoming video program is not rated in MPAA rating then this bit is set high

X: When incoming video program is X rated in MPAA rating then this bit is set high

NC-17: When incoming video program is NC-17 rated in MPAA rating then this bit is set high

R: When incoming video program is R rated in MPAA rating then this bit is set high

PG-13: When incoming video program is PG-13 rated in MPAA rating then this bit is set high

PG: When incoming video program is PG rated in MPAA rating then this bit is set high

G: When incoming video program is G rated in MPAA rating then this bit is set high

N/A: When incoming video program is N/A rated in MPAA rating then this bit is set high

2.12.8 VDP General Line Mode and Line Address Register

Subaddress	80 0600h–80 0611h

(default line mode = FFh, address = 00h)

Subaddress	7	6	5	4	3	2	1	0
80 0600h	Line address 1							
80 0601h	Line mode 1							
80 0602h	Line address 2							
80 0603h	Line mode 2							
80 0604h	Line address 3							
80 0605h	Line mode 3							
80 0606h	Line address 4							
80 0607h	Line mode 4							
80 0608h	Line address 5							
80 0609h	Line mode 5							
80 060Ah	Line address 6							
80 060Bh	Line mode 6							
80 060Ch	Line address 7							
80 060Dh	Line mode 7							
80 060Eh	Line address 8							
80 060Fh	Line mode 8							
80 0610h	Line address 9							
80 0611h	Line mode 9							

Line address [7:0]: Line number to be processed by a VDP set by a line mode register (default 00h)
Line mode register [7:0]:

Bit 7: 0 = Disabled filters
1 = Enabled filters for teletext and CC (null byte filter) (default)

Bit 6: 0 = Send sliced VBI data to registers only (default)
1 = Send sliced VBI data to FIFO and registers, teletext data only goes to FIFO (default)

Bit 5: 0 = Allow VBI data with errors in the FIFO
1 = Do not allow VBI data with errors in the FIFO (default)

Bit 4: 0 = Disabled error detection and correction
1 = Enabled error detection and correction (teletext only) (default)

Bit 3: 0 = Field 1
1 = Field 2 (default)

Bits [2:0]: 000 = Teletext (WST625, Chinese teletext, NABTS 525)
001 = CC (US, Europe, Japan, China)
010 = WSS (525, 625)
011 = VITC
100 = VPS/PDC (PAL only), Gemstar (NTSC only)
101 = USER 1
110 = USER 2
111 = Reserved (active video) (default)

2.12.9 VDP VPS/Gemstar Data Register

Subaddress	80 0700h–80 070Ch

VPS: Read only

Subaddress	7	6	5	4	3	2	1	0
80 0700h	VPS byte 1							
80 0701h	VPS byte 2							
80 0702h	VPS byte 3							
80 0703h	VPS byte 4							
80 0704h	VPS byte 5							
80 0705h	VPS byte 6							
80 0706h	VPS byte 7							
80 0707h	VPS byte 8							
80 0708h	VPS byte 9							
80 0709h	VPS byte 10							
80 070Ah	VPS byte 11							
80 070Bh	VPS byte 12							
80 070Ch	VPS byte 13							

These registers contain the entire VPS data line except the clock run-in code or the start code.

Gemstar: Read only

Subaddress	7	6	5	4	3	2	1	0
80 0700h	Gemstar frame code							
80 0701h	Gemstar byte 1							
80 0702h	Gemstar byte 2							
80 0703h	Gemstar byte 3							
80 0704h	Gemstar byte 4							
80 0705h	Reserved							
80 0706h	Reserved							
80 0707h	Reserved							
80 0708h	Reserved							
80 0709h	Reserved							
80 070Ah	Reserved							
80 070Bh	Reserved							
80 070Ch	Reserved							

2.12.10 Analog Output Control 2 Register

Subaddress	A0 005Eh
Default	B2h

7	6	5	4	3	2	1	0
Reserved	Reserved	Input Select [1:0]		Gain [3:0]			

Analog input select [1:0]: These bits are effective when manual input select bit is set to 1 at subaddress 7Fh, bit 1.

00 = CH1 selected
01 = CH2 selected
10 = CH3 selected
11= CH4 selected (default)

Analog output PGA gain [3:0]: These bits are effective when analog output AGC is set to 1 at subaddress 7Fh, bit 2.

Gain [3:0]	Mode 1
0000 =	1.30
0001 =	1.56
0010 = (default)	1.82
0011 =	2.08
0100 =	2.34
0101 =	2.60
0110 =	2.86
0111 =	3.12
0000 =	3.38
0001 =	3.64
0010 =	3.90
0011 =	4.16
0100 =	4.42
0101 =	4.68
0110 =	4.94
0111 =	5.20

2.12.11 Interrupt Configuration Register

Subaddress	B0 0060h
Default	00h

7	6	5	4	3	2	1	0
Reserved					Polarity	Reserved	

Polarity: Interrupt terminal polarity

0 = Active high (default)
1 = Active low

3 Electrical Specifications

3.1 Absolute Maximum Ratings†

Supply voltage range: IOV_{DD} to I/O GND . . . . . 0.5 V to 4 V
DV_{DD} to DGND . . . . . –0.2 V to 2 V
A33VDD (see Note 1) to A18GND (see Note 2) . . . . . –0.3 V to 3.6 V
A18VDD (see Note 3) to A33GND (see Note 4) . . . . . –0.2 V to 2 V
Digital input voltage, V_I to DGND . . . . . –0.5 V to 4.5 V
Digital output voltage, V_O to DGND . . . . . –0.5 V to 4.5 V
Analog input voltage range AIN to AGND . . . . . –0.2 V to 2 V
Operating free-air temperature, T_A . . . . . 0°C to 70°C
Storage temperature, T_{stg} . . . . . –65°C to 150°C

† Stresses beyond those listed under “Absolute Maximum Ratings” may cause permanent damage to the device. These are stress ratings only and functional operation of the device at these or any other conditions beyond those indicated under “recommended operating conditions” is not implied. Exposure to absolute-maximum-rated conditions for extended periods may affect device reliability.

NOTES: 1. CH1_A33VDD, CH2_A33VDD
2. CH1_A33GND, CH2_A33GND
3. CH1_A18VDD, CH2_A18VDD, A18VDD_REF, PLL_A18VDD
4. CH1_A18GND, CH2_A18GND, A18GND

3.2 Recommended Operating Conditions

		MIN	NOM	MAX	UNIT
IOV_{DD}	Digital supply voltage	3	3.3	3.6	V
DV_{DD}	Digital supply voltage	1.65	1.8	1.95	V
AV_{DD33}	Analog supply voltage	3	3.3	3.6	V
AV_{DD18}	Analog supply voltage	1.65	1.8	1.95	V
$V_{I(P-P)}$	Analog input voltage (ac-coupling necessary)	0.5	1	2	V
V_{IH}	Digital input voltage, high (Note 1)	0.7 IOV_{DD}			V
V_{IL}	Digital input voltage, low (Note 2)			0.3 IOV_{DD}	V
I_{OH}	Output current, V_{out} = 2.4 V		–4		mA
I_{OL}	Output current, V_{out} = 0.4 V		4		mA
T_A	Operating free-air temperature	0		70	°C

NOTES: 1. Exception: 0.7 AV_{DD18} for XTAL1 terminal
2. Exception: 0.3 AV_{DD18} for XTAL1 terminal

3.2.1 Crystal Specifications

CRYSTAL SPECIFICATIONS	MIN	NOM	MAX	UNIT
Frequency		14.31818		MHz
Frequency tolerance			±50	ppm

3.3 Electrical Characteristics

For minimum/maximum values: IOV_{DD} = 3 V to 3.6 V, DV_{DD} = 1.65 V to 1.95 V, AV_{DD33} = 3 V to 3.6 V, AV_{DD18} = 1.65 V to 1.95 V, T_A = 0°C to 70°C

For typical values: IOV_{DD} = 3.3 V, DV_{DD} = 1.8 V, AV_{DD33} = 3.3 V, AV_{DD18} = 1.8 V, T_A = 25°C

3.3.1 DC Electrical Characteristics (see Note 1)

PARAMETER		TEST CONDITIONS	MIN	TYP	MAX	UNIT
$I_{DDIO(D)}$	3.3-V IO digital supply current	CVBS		6		mA
		S-video		6		
$I_{DD(D)}$	1.8-V digital supply current	CVBS		55		mA
		S-video		55		
$I_{DD33(A)}$	3.3-V analog supply current	CVBS		24		mA
		S-video		39		
$I_{DD18(A)}$	1.8-V analog supply current	CVBS		79		mA
		S-video		135		
P_{TOT}	Total power dissipation (normal operation)	S-video		490		mW
P_{SAVE}	Total power dissipation (power save)			100		mW
P_{DOWN}	Total power dissipation (power down)			10		mW
I_{lkg}	Input leakage current				10	µA
C_i	Input capacitance	By design			8	pF
V_{OH}	Output voltage high		0.8 IOV_{DD}			V
V_{OL}	Output voltage low				0.2 IOV_{DD}	V

NOTE 1: Measured with a load of 10 kΩ in parallel to 15 pF.

3.3.2 Analog Processing and A/D Converters

3.3.2.1 F_s = 30 MSPS for CH1, CH2

PARAMETER		TEST CONDITIONS	MIN	TYP	MAX	UNIT
Z_i	Input impedance, analog video inputs	By design	200			kΩ
C_i	Input capacitance, analog video inputs	By design			10	pF
Vi(pp)	Input voltage range	$C_{coupling}$ = 0.1 µF	0.5	1	2	V
ΔG	Gain control range		–6		6	dB
DNL	Differential nonlinearity	AFE only		0.75	1	LSB
INL	Integral nonlinearity	AFE only		1	2.5	LSB
Fr	Frequency response	Multiburst (60 IRE)		–0.9		dB
XTALK	Crosstalk	1 MHz			–50	dB
SNR	Signal-to-noise ratio, all channels	1 MHz, 1 V_{P-P}		54		dB
GM	Gain match (Note 1)	Full scale, 1 MHz		1.5%		
NS	Noise spectrum	Luma ramp (100 kHz to full, tilt-null)		–58		dB
DP	Differential phase	Modulated ramp		0.5		°
DG	Differential gain	Modulated ramp		±1.5%		
V_O	Output voltage	C_L = 10 pF		2	2.4	V

NOTE 1: Component inputs only

3.3.3 Timing

3.3.3.1 Clocks, Video Data, Sync Timing

	PARAMETER	TEST CONDITIONS (see NOTE 1)	MIN	TYP	MAX	UNIT
	Duty cycle DATACLK		45%	50%	55%	
t_1	High time, DATACLK			18.5		ns
t_2	Low time, DATACLK			18.5		ns
t_3	Fall time, DATACLK	90% to 10%			4	ns
t_4	Rise time, DATACLK	10% to 90%			4	ns
t_5	Output delay time				10	ns

NOTE 1: C_L = 15 pF

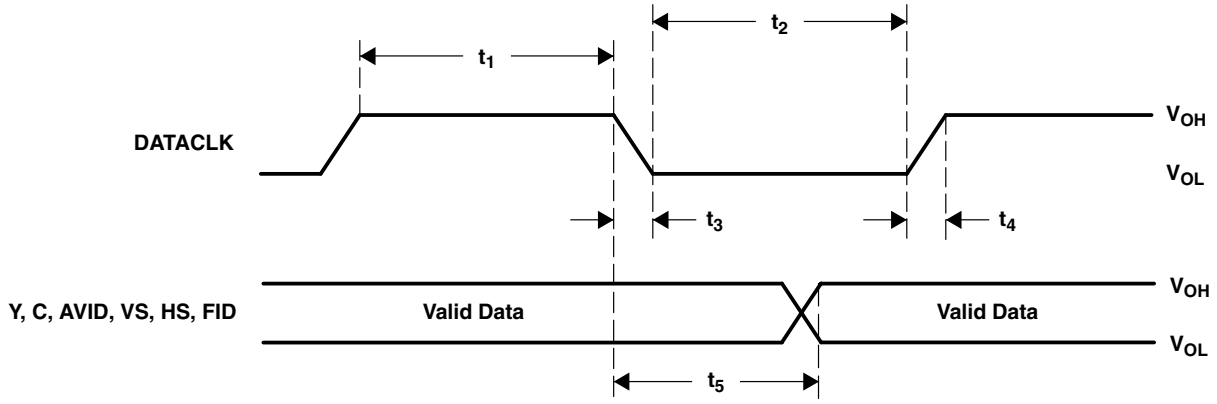

Figure 3–1. Clocks, Video Data, and Sync Timing

3.3.3.2 I²C Host Port Timing

	PARAMETER	TEST CONDITIONS	MIN	TYP	MAX	UNIT
t_1	Bus free time between STOP and START		1.3			µs
t_2	Data hold time		0		0.9	µs
t_3	Data setup time		100			ns
t_4	Setup time for a (repeated) START condition		0.6			µs
t_5	Setup time for a STOP condition		0.6			ns
t_6	Hold time for a (repeated) START condition		0.6			µs
t_7	Rise time VC1(SDA) and VC0(SCL) signal				250	ns
t_8	Fall time VC1(SDA) and VC0(SCL) signal				250	ns
C_b	Capacitive load for each bus line				400	pF
f_{I2C}	I²C clock frequency				400	kHz

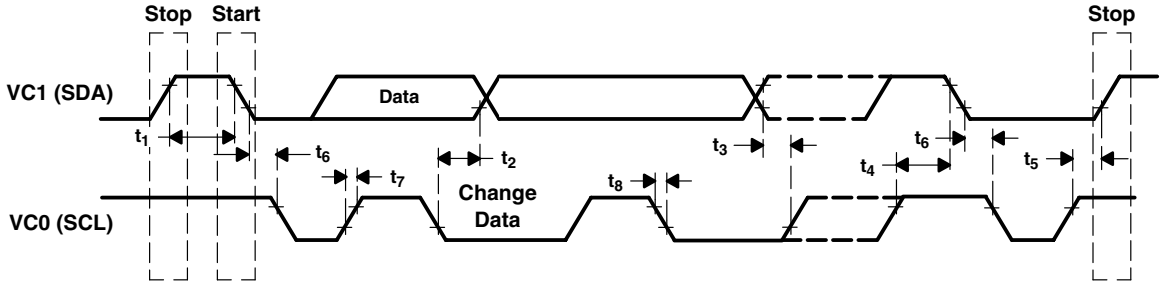

Figure 3–2. I²C Host Port Timing

4 Example Register Settings

The following example register settings are provided only as a reference. These settings, given the assumed input connector, video format, and output format, set up the TVP5147 decoder and provide video output. Example register settings for other features and the VBI data processor are not provided here.

4.1 Example 1

4.1.1 Assumptions

Input connector: Composite (VI_1_A) (default)

Video format: NTSC (J, M), PAL (B, G, H, I, N) or SECAM (default)

NOTE: NTSC-443, PAL-Nc, and PAL-M are masked from the autoswitch process by default. See the autoswitch mask register at address 04h.

Output format: 10-bit ITU-R BT.656 with embedded syncs (default)

4.1.2 Recommended Settings

Recommended I^2C writes: For the given assumptions, only one write is required. All other registers are set up by default.

I^2C register address 08h = Luminance processing control 3 register

I^2C data 00h = Optimizes the trap filter selection for NTSC and PAL

I^2C register address 0Eh = Chrominance processing control 2 register

I^2C data 04h = Optimizes the chrominance filter selection for NTSC and PAL

I^2C register address 34h = Output formatter 2 register

I^2C data 11h = Enables YCbCr output and the clock output

NOTE: HS/CS, VS/VBLK, AVID, FID, and GLCO are logic inputs by default. See output formatter 3 and 4 registers at addresses 35h and 36h, respectively.

4.2 Example 2

4.2.1 Assumptions

Input connector: S-video [VI_2_C (luma), VI_1_C (chroma)]

Video format: NTSC (J, M, 443), PAL (B, D, G, H, I, N, Nc, 60) or SECAM (default)

Output format: 10-bit ITU-R BT.656 with discrete sync outputs

4.2.2 Recommended Settings

Recommended I^2C writes: This setup requires additional writes to output the discrete sync 10-bit 4:2:2 data, HS, and VS, and to autoswitch between all video formats mentioned above.

I²C register address 00h = Input select register
I²C data 46h = Sets luma to VI_2_C and chroma to VI_1_C

I²C register address 04h = Autoswitch mask register
I²C data 3Fh = Includes NTSC 443 and PAL (M, Nc, 60) in the autoswitch

I²C register address 08h = Luminance processing control 3 register
I²C data 00h = Optimizes the trap filter selection for NTSC and PAL

I²C register address 0Eh = Chrominance processing control 2 register
I²C data 04h = Optimizes the chrominance filter selection for NTSC and PAL

I²C register address 33h = Output formatter 1 register
I²C data 41h = Selects the 10-bit 4:2:2 output format

I²C register address 34h = Output formatter 2 register
I²C data 11h = Enables YCbCr output and the clock output

I²C register address 36h = Output formatter 4 register
I²C data 11h = Enables HS and VS sync outputs

4.3 Example 3

4.3.1 Assumptions

Input connector:	Component [VI_1_B (Pb), VI_2_B (Y), VI_3_B (Pr)]
Video format:	NTSC (J, M, 443), PAL (B, D, G, H, I, N, Nc, 60) or SECAM (default)
Output format:	20-bit ITU-R BT.656 with discrete sync outputs

4.3.2 Recommended Settings

Recommended I²C writes: This setup requires additional writes to output the discrete sync 20-bit 4:2:2 data, HS, and VS, and to autoswitch between all video formats mentioned above.

I²C register address 00h = Input select register
I²C data 95h = Sets Pb to VI_1_B, Y to VI_2_B, and Pr to VI_3_B

I²C register address 04h = Autoswitch mask register
I²C data 3Fh = Includes NTSC 443 and PAL (M, Nc, 60) in the autoswitch

I²C register address 08h = Luminance processing control 3 register
I²C data 00h = Optimizes the trap filter selection for NTSC and PAL

I²C register address 0Eh = Chrominance processing control 2 register
I²C data 04h = Optimizes the chrominance filter selection for NTSC and PAL

I²C register address 33h = Output formatter 1 register
I²C data 41h = Selects the 20-bit 4:2:2 output format

I²C register address 34h = Output formatter 2 register
I²C data 11h = Enables YCbCr output and the clock output

I²C register address 36h = Output formatter 4 register
I²C data AFh = Enables HS and VS sync outputs

5 Application Information

5.1 Application Example

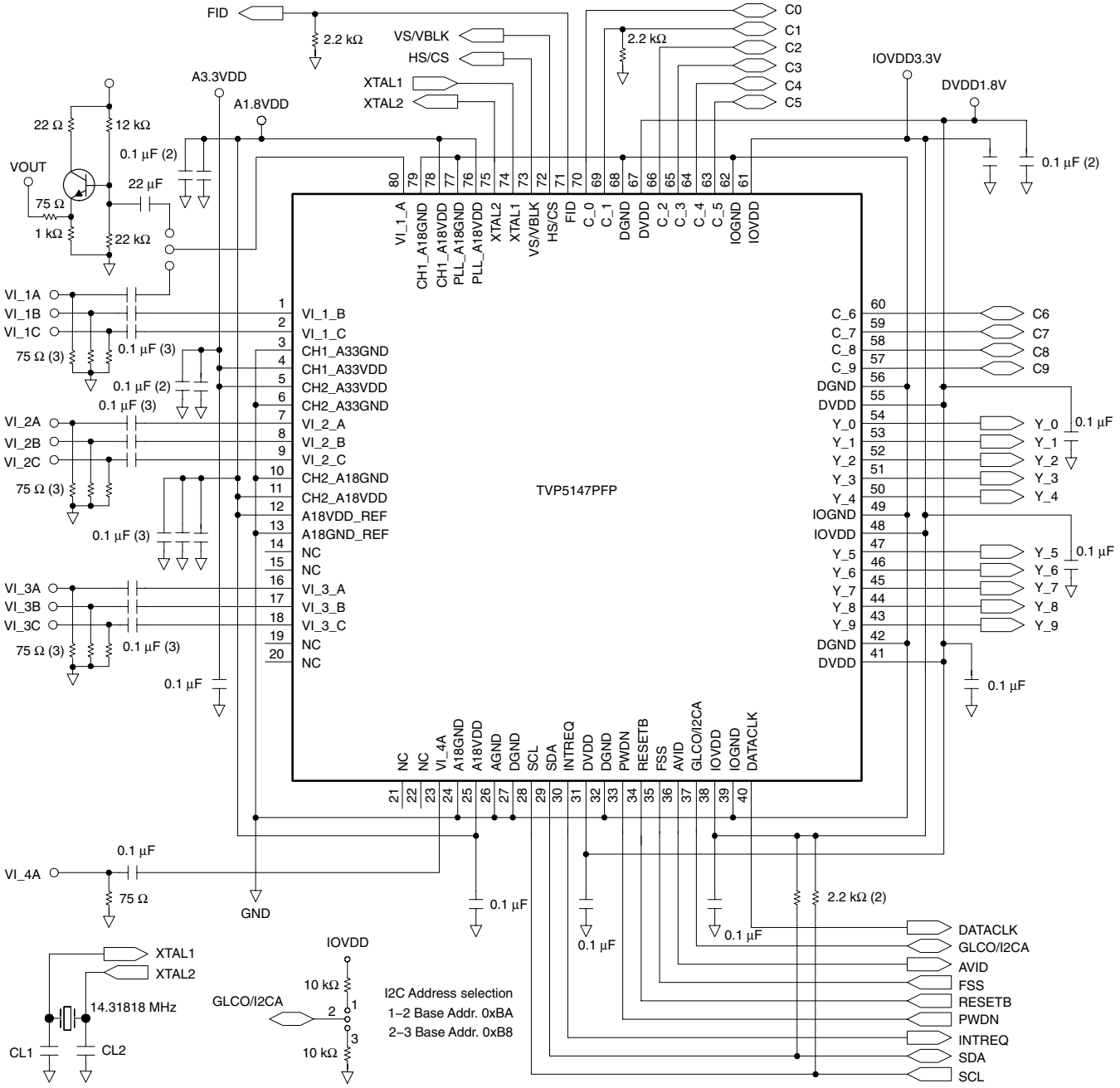

NOTE: If XTAL1 is connected to clock source, input voltage high must be 1.8 V.
TVP5147 can be a drop-in replacement for TVP5146.
Terminals 69 and 71 must be connected to ground through pulldown resistors.

Figure 5–1. Example Application Circuit

5.2 Designing With PowerPAD™ Devices

The TVP5147 device is housed in a high-performance, thermally enhanced, 80-terminal PowerPAD package (TI package designator: 80PFP). Use of the PowerPAD package does not require any special considerations except to note that the thermal pad, which is an exposed die pad on the bottom of the device, is a metallic thermal and electrical conductor. Therefore, if not implementing the PowerPAD PCB features, the use of solder masks (or other assembly techniques) can be required to prevent any inadvertent shorting by the exposed thermal pad of connection etches or vias under the package. The recommended option, however, is not to run any etches or signal vias under the device, but to have only a grounded thermal land as in the following explanation. Although the actual size of the exposed die pad may vary, the minimum size required for the keep-out area for the 80-terminal PFP PowerPAD package is 8 mm $\times$ 8 mm.

It is recommended that there be a thermal land, which is an area of solder-tinned-copper, underneath the PowerPAD package. The thermal land varies in size, depending on the PowerPAD package being used, the PCB construction, and the amount of heat that needs to be removed. In addition, the thermal land may or may not contain numerous thermal vias depending on PCB construction.

Other requirements for using thermal lands and thermal vias are detailed in the TI application note PowerPAD™ *Thermally Enhanced Package Application Report*, (SLMA002), available via the TI Web pages beginning at URL: http://www.ti.com

For the TVP5147 device, this thermal land must be grounded to the low-impedance ground plane of the device. This improves not only thermal performance but also the electrical grounding of the device. It is also recommended that the device ground terminal landing pads be connected directly to the grounded thermal land. The land size must be as large as possible without shorting device signal terminals. The thermal land can be soldered to the exposed thermal pad using standard reflow soldering techniques.

While the thermal land can be electrically floated and configured to remove heat to an external heat sink, it is recommended that the thermal land be connected to the low-impedance ground plane for the device. More information can be obtained from the TI application note *PHY Layout* (SLLA020).

PowerPAD is a trademark of Texas Instruments.

PACKAGING INFORMATION

Orderable Device	Status (1)	Package Type	Package Drawing	Pins	Package Qty	Eco Plan (2)	Lead/ Ball Finish	MSL Peak Temp (3)	Samples (Requires Login)
TVP5147PFP	NRND	HTQFP	PFP	80	96	Green (RoHS & no Sb/Br)	CU NIPDAU	Level-3-260C-168 HR	Replaced by TVP5147M1PFP
TVP5147PFPR	NRND	HTQFP	PFP	80	1000	Green (RoHS & no Sb/Br)	CU NIPDAU	Level-3-260C-168 HR	Replaced by TVP5147M1PFPR

(1) The marketing status values are defined as follows:
ACTIVE: Product device recommended for new designs.
LIFEBUY: TI has announced that the device will be discontinued, and a lifetime-buy period is in effect.
NRND: Not recommended for new designs. Device is in production to support existing customers, but TI does not recommend using this part in a new design.
PREVIEW: Device has been announced but is not in production. Samples may or may not be available.
OBSOLETE: TI has discontinued the production of the device.

(2) Eco Plan - The planned eco-friendly classification: Pb-Free (RoHS), Pb-Free (RoHS Exempt), or Green (RoHS & no Sb/Br) - please check http://www.ti.com/productcontent for the latest availability information and additional product content details.
TBD: The Pb-Free/Green conversion plan has not been defined.
Pb-Free (RoHS): TI's terms "Lead-Free" or "Pb-Free" mean semiconductor products that are compatible with the current RoHS requirements for all 6 substances, including the requirement that lead not exceed 0.1% by weight in homogeneous materials. Where designed to be soldered at high temperatures, TI Pb-Free products are suitable for use in specified lead-free processes.
Pb-Free (RoHS Exempt): This component has a RoHS exemption for either 1) lead-based flip-chip solder bumps used between the die and package, or 2) lead-based die adhesive used between the die and leadframe. The component is otherwise considered Pb-Free (RoHS compatible) as defined above.
Green (RoHS & no Sb/Br): TI defines "Green" to mean Pb-Free (RoHS compatible), and free of Bromine (Br) and Antimony (Sb) based flame retardants (Br or Sb do not exceed 0.1% by weight in homogeneous material)

(3) MSL, Peak Temp. -- The Moisture Sensitivity Level rating according to the JEDEC industry standard classifications, and peak solder temperature.

Important Information and Disclaimer: The information provided on this page represents TI's knowledge and belief as of the date that it is provided. TI bases its knowledge and belief on information provided by third parties, and makes no representation or warranty as to the accuracy of such information. Efforts are underway to better integrate information from third parties. TI has taken and continues to take reasonable steps to provide representative and accurate information but may not have conducted destructive testing or chemical analysis on incoming materials and chemicals. TI and TI suppliers consider certain information to be proprietary, and thus CAS numbers and other limited information may not be available for release.

In no event shall TI's liability arising out of such information exceed the total purchase price of the TI part(s) at issue in this document sold by TI to Customer on an annual basis.

PFP (S–PQFP–G80) PowerPAD™ PLASTIC QUAD FLATPACK

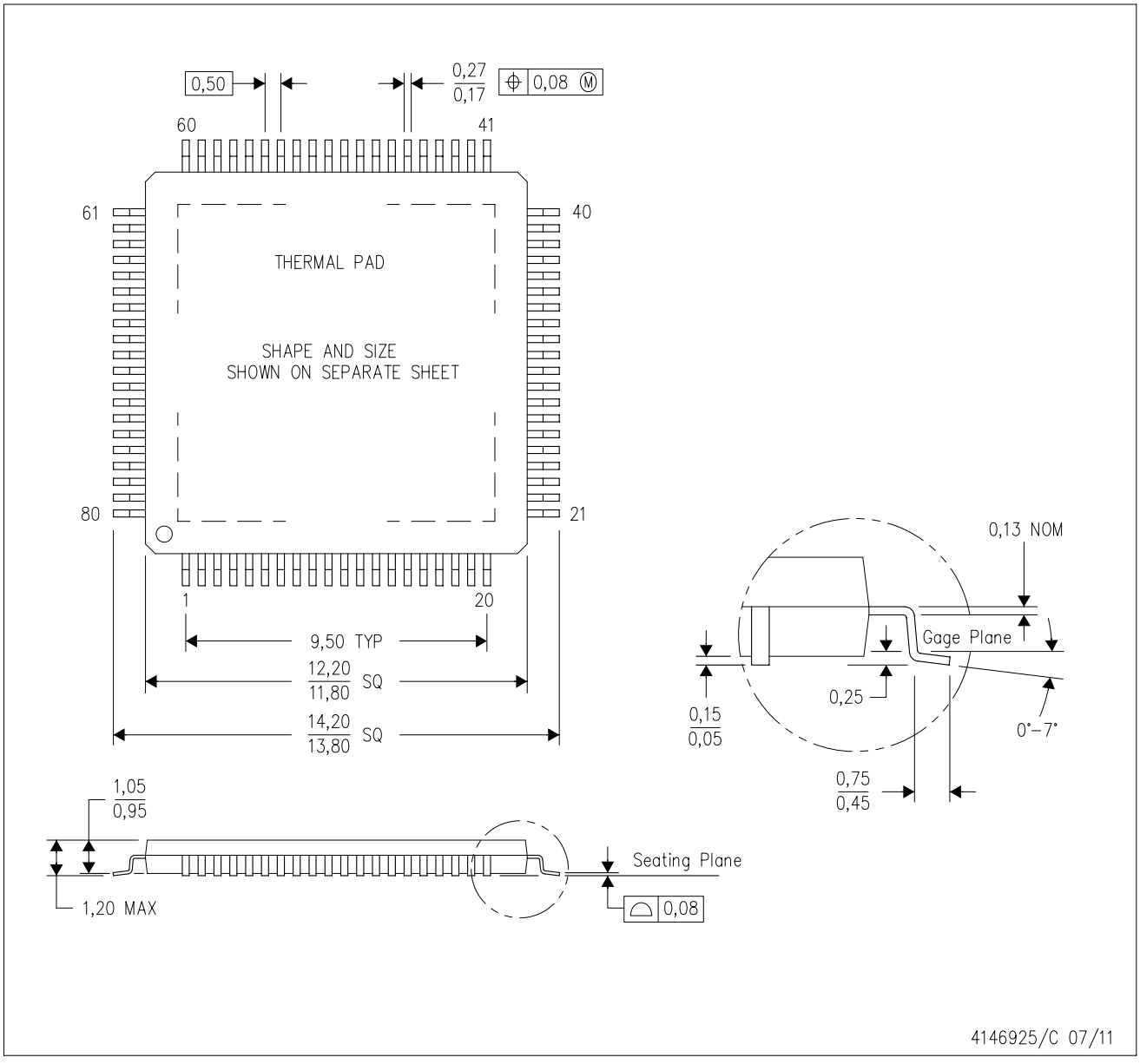

NOTES:
A. All linear dimensions are in millimeters.
B. This drawing is subject to change without notice.
C. Body dimensions do not include mold flash or protrusion
D. This package is designed to be soldered to a thermal pad on the board. Refer to Technical Brief, PowerPad Thermally Enhanced Package, Texas Instruments Literature No. SLMA002 for information regarding recommended board layout. This document is available at www.ti.com <http://www.ti.com>.
E. See the additional figure in the Product Data Sheet for details regarding the exposed thermal pad features and dimensions.
F. Falls within JEDEC MS–026

PowerPAD is a trademark of Texas Instruments.

PFP (S–PQFP–G80) PowerPAD™ PLASTIC QUAD FLATPACK

THERMAL INFORMATION

This PowerPAD™ package incorporates an exposed thermal pad that is designed to be attached to a printed circuit board (PCB). The thermal pad must be soldered directly to the PCB. After soldering, the PCB can be used as a heatsink. In addition, through the use of thermal vias, the thermal pad can be attached directly to the appropriate copper plane shown in the electrical schematic for the device, or alternatively, can be attached to a special heatsink structure designed into the PCB. This design optimizes the heat transfer from the integrated circuit (IC).

For additional information on the PowerPAD package and how to take advantage of its heat dissipating abilities, refer to Technical Brief, PowerPAD Thermally Enhanced Package, Texas Instruments Literature No. SLMA002 and Application Brief, PowerPAD Made Easy, Texas Instruments Literature No. SLMA004. Both documents are available at www.ti.com.

The exposed thermal pad dimensions for this package are shown in the following illustration.

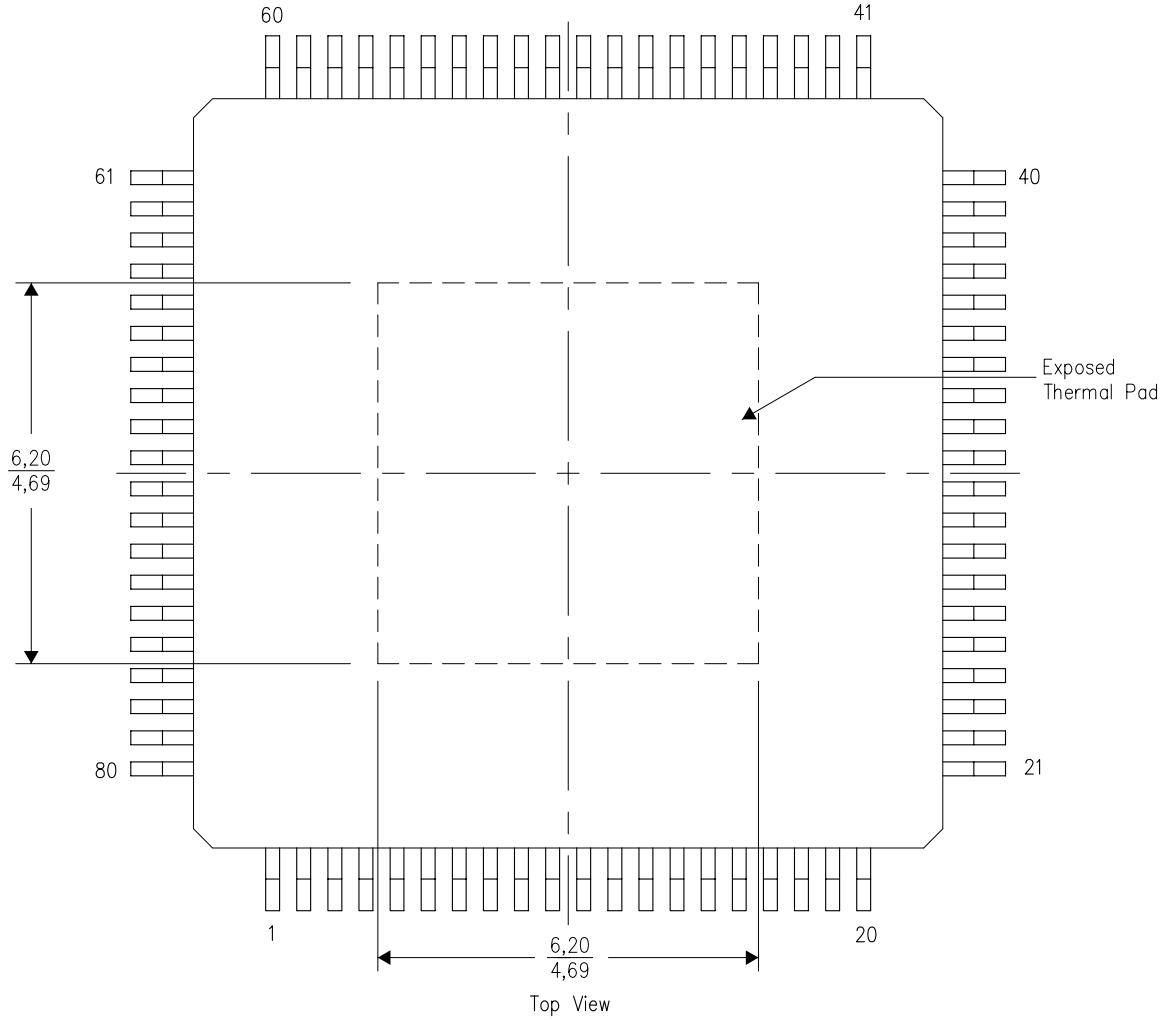

Exposed Thermal Pad Dimensions

4206327–3/M 02/11

NOTE: A. All linear dimensions are in millimeters

PowerPAD is a trademark of Texas Instruments

PFP (S–PQFP–G80) PowerPAD™ PLASTIC QUAD FLATPACK

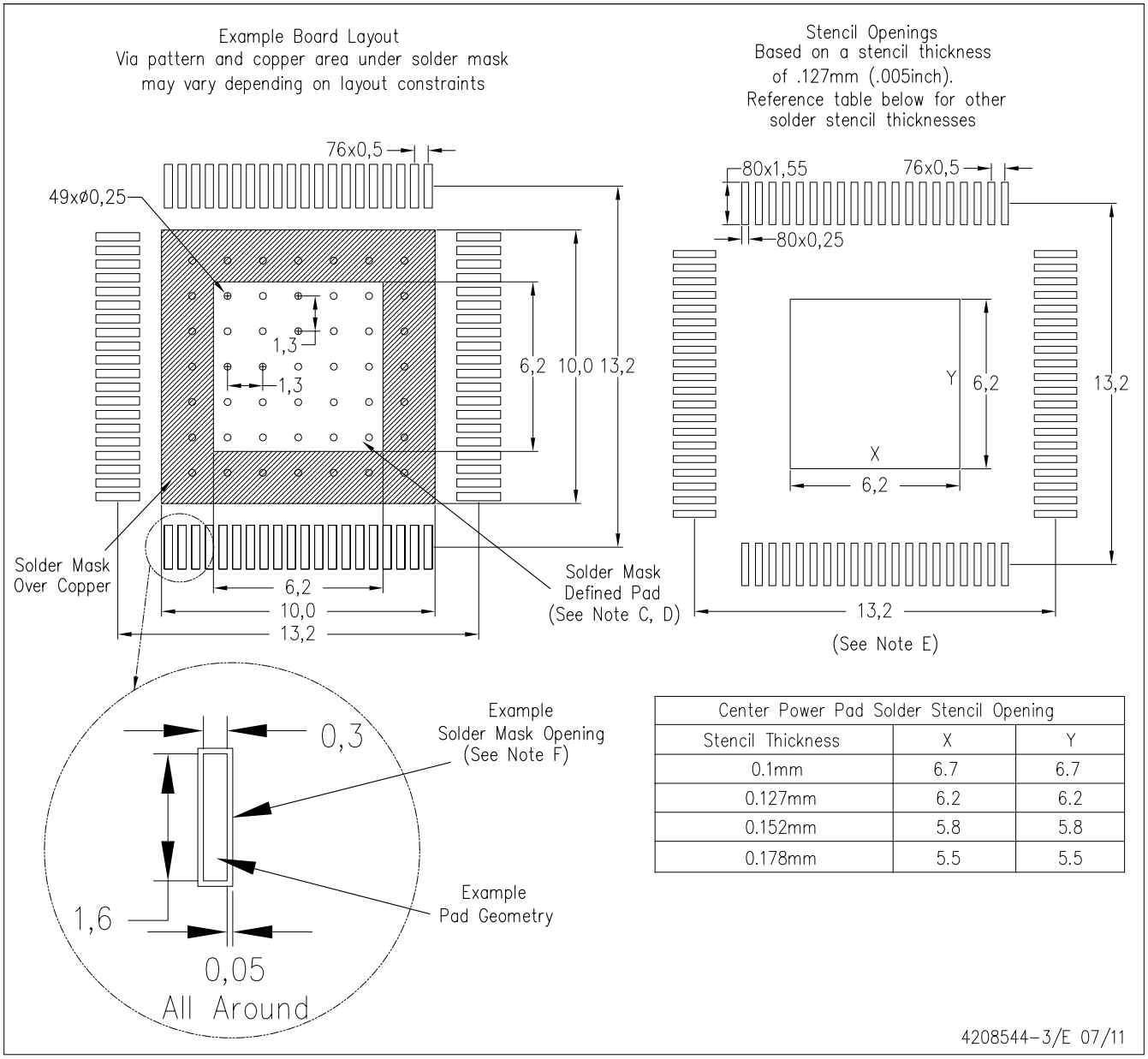

Center Power Pad Solder Stencil Opening		
Stencil Thickness	X	Y
0.1mm	6.7	6.7
0.127mm	6.2	6.2
0.152mm	5.8	5.8
0.178mm	5.5	5.5

NOTES:
A. All linear dimensions are in millimeters.
B. This drawing is subject to change without notice.
C. Customers should place a note on the circuit board fabrication drawing not to alter the center solder mask defined pad.
D. This package is designed to be soldered to a thermal pad on the board. Refer to Technical Brief, PowerPad Thermally Enhanced Package, Texas Instruments Literature No. SLMA002, SLMA004, and also the Product Data Sheets for specific thermal information, via requirements, and recommended board layout. These documents are available at www.ti.com <http://www.ti.com>. Publication IPC–7351 is recommended for alternate designs.
E. Laser cutting apertures with trapezoidal walls and also rounding corners will offer better paste release. Customers should contact their board assembly site for stencil design recommendations. Example stencil design based on a 50% volumetric metal load solder paste. Refer to IPC–7525 for other stencil recommendations.
F. Customers should contact their board fabrication site for solder mask tolerances between and around signal pads.

PowerPAD is a trademark of Texas Instruments.

IMPORTANT NOTICE

Texas Instruments Incorporated and its subsidiaries (TI) reserve the right to make corrections, modifications, enhancements, improvements, and other changes to its products and services at any time and to discontinue any product or service without notice. Customers should obtain the latest relevant information before placing orders and should verify that such information is current and complete. All products are sold subject to TI's terms and conditions of sale supplied at the time of order acknowledgment.

TI warrants performance of its hardware products to the specifications applicable at the time of sale in accordance with TI's standard warranty. Testing and other quality control techniques are used to the extent TI deems necessary to support this warranty. Except where mandated by government requirements, testing of all parameters of each product is not necessarily performed.

TI assumes no liability for applications assistance or customer product design. Customers are responsible for their products and applications using TI components. To minimize the risks associated with customer products and applications, customers should provide adequate design and operating safeguards.

TI does not warrant or represent that any license, either express or implied, is granted under any TI patent right, copyright, mask work right, or other TI intellectual property right relating to any combination, machine, or process in which TI products or services are used. Information published by TI regarding third-party products or services does not constitute a license from TI to use such products or services or a warranty or endorsement thereof. Use of such information may require a license from a third party under the patents or other intellectual property of the third party, or a license from TI under the patents or other intellectual property of TI.

Reproduction of TI information in TI data books or data sheets is permissible only if reproduction is without alteration and is accompanied by all associated warranties, conditions, limitations, and notices. Reproduction of this information with alteration is an unfair and deceptive business practice. TI is not responsible or liable for such altered documentation. Information of third parties may be subject to additional restrictions.

Resale of TI products or services with statements different from or beyond the parameters stated by TI for that product or service voids all express and any implied warranties for the associated TI product or service and is an unfair and deceptive business practice. TI is not responsible or liable for any such statements.

TI products are not authorized for use in safety-critical applications (such as life support) where a failure of the TI product would reasonably be expected to cause severe personal injury or death, unless officers of the parties have executed an agreement specifically governing such use. Buyers represent that they have all necessary expertise in the safety and regulatory ramifications of their applications, and acknowledge and agree that they are solely responsible for all legal, regulatory and safety-related requirements concerning their products and any use of TI products in such safety-critical applications, notwithstanding any applications-related information or support that may be provided by TI. Further, Buyers must fully indemnify TI and its representatives against any damages arising out of the use of TI products in such safety-critical applications.

TI products are neither designed nor intended for use in military/aerospace applications or environments unless the TI products are specifically designated by TI as military-grade or "enhanced plastic." Only products designated by TI as military-grade meet military specifications. Buyers acknowledge and agree that any such use of TI products which TI has not designated as military-grade is solely at the Buyer's risk, and that they are solely responsible for compliance with all legal and regulatory requirements in connection with such use.

TI products are neither designed nor intended for use in automotive applications or environments unless the specific TI products are designated by TI as compliant with ISO/TS 16949 requirements. Buyers acknowledge and agree that, if they use any non-designated products in automotive applications, TI will not be responsible for any failure to meet such requirements.

Following are URLs where you can obtain information on other Texas Instruments products and application solutions:

Products		**Applications**	
Audio	www.ti.com/audio	Communications and Telecom	www.ti.com/communications
Amplifiers	amplifier.ti.com	Computers and Peripherals	www.ti.com/computers
Data Converters	dataconverter.ti.com	Consumer Electronics	www.ti.com/consumer-apps
DLP® Products	www.dlp.com	Energy and Lighting	www.ti.com/energy
DSP	dsp.ti.com	Industrial	www.ti.com/industrial
Clocks and Timers	www.ti.com/clocks	Medical	www.ti.com/medical
Interface	interface.ti.com	Security	www.ti.com/security
Logic	logic.ti.com	Space, Avionics and Defense	www.ti.com/space-avionics-defense
Power Mgmt	power.ti.com	Transportation and Automotive	www.ti.com/automotive
Microcontrollers	microcontroller.ti.com	Video and Imaging	www.ti.com/video
RFID	www.ti-rfid.com	Wireless	www.ti.com/wireless-apps
RF/IF and ZigBee® Solutions	www.ti.com/lprf		
	TI E2E Community Home Page		e2e.ti.com

Mailing Address: Texas Instruments, Post Office Box 655303, Dallas, Texas 75265
Copyright © 2011, Texas Instruments Incorporated