TEXAS INSTRUMENTS

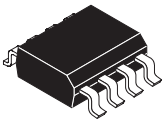

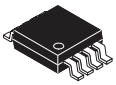

SLAS345 − DECEMBER 2001

5-V, LOW POWER, 14-BIT, 200-KSPS SERIAL ANALOG-TO-DIGITAL CONVERTERS WITH AUTO-POWER DOWN

FEATURES

- 200-KSPS Sampling Rate
- Built-In Conversion Clock
- INL: ±1 LSB Max
  DNL: ±1 LSB Max
- SINAD = 81.5 dB, SFDR = 95 dB
  THD = 94 dB at 15 kHz f_{in}, 200 KSPS
- SPI/DSP-Compatible Serial Interfaces With SCLK Input up to 15 MHz
- Single 5-V Supply
- Rail-to-Rail Analog Input With 500 kHz BW
- Two Input Options Available:
  - TLC3541 − Single Channel Input
  - TLC3545 − Single Channel, Pseudo-Differential Input
- (TLC3541) Optimized DSP Interface − Requires FS Input Only
- Low Power With Auto-Power Down
  - Operating Current: 3.5 mA
  - Auto-Powerdown Current: 5 μA
- Pin Compatible 12-/14-/16-Bit Family in 8-Pin SOIC and MSOP Packages

APPLICATIONS

- ATE System
- Industrial Process Control
- Measurement
- Motor Control

DESCRIPTION

The TLC3541 and TLC3545 are a family of high performance, 14-bit, low power, miniature CMOS analog-to-digital converters (ADCs). These devices operate from a single 5-V supply. Devices are available with single, dual, or single pseudo-differential inputs. All of these devices have a chip select ($\overline{CS}$), serial clock (SCLK), and serial data output (SDO) that provides a direct 3-wire interface to the serial port of most popular host microprocessors (SPI interface). When interfaced with a DSP, a frame sync signal (FS) is used to indicate the start of a serial data frame on either pin 1 ($\overline{CS}$) or pin 7 (FS) for the TLC3541. The TLC3545 ADC connects to the DSP via pin 1 only ($\overline{CS}$).

The TLC3541 and TLC3545 are designed to operate with low power consumption. The power saving feature is further enhanced with an auto-power down mode. This product family features a high-speed serial link to modern host processors with an external SCLK up to 15 MHz. Both families use a built-in oscillator as the conversion clock, providing a 2.67 μs maximum conversion time.

TLC3541
D OR DGK Package
(TOP VIEW)

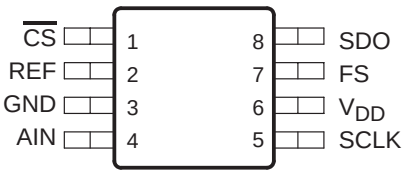

TLC3545
D OR DGK Package
(TOP VIEW)

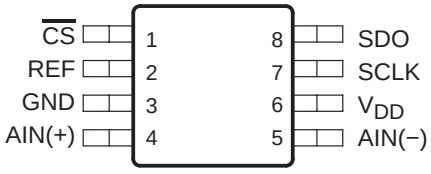

Please be aware that an important notice concerning availability, standard warranty, and use in critical applications of Texas Instruments semiconductor products and disclaimers thereto appears at the end of this data sheet.

PRODUCTION DATA information is current as of publication date. Products conform to specifications per the terms of Texas Instruments standard warranty. Production processing does not necessarily include testing of all parameters.

Copyright © 2001, Texas Instruments Incorporated

AVAILABLE OPTIONS

T_A	PACKAGED DEVICES	
	8-MSOP (DGK)	8-SOIC (D)
−40°C to 85°C	TLC3541IDGK (PKG Code = AMG)	TLC3541ID
	TLC3545IDGK (PKG Code = AMM)	TLC3545ID

functional block diagram

TLC3541

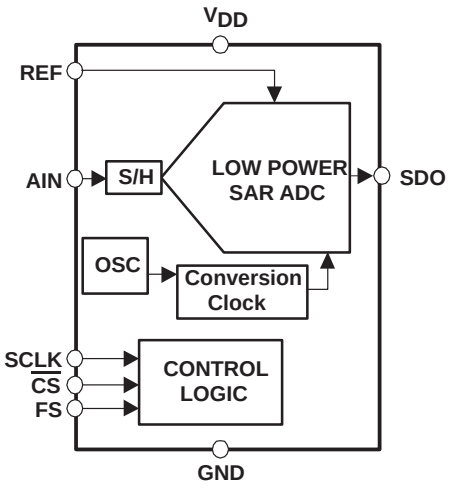

TLC3545

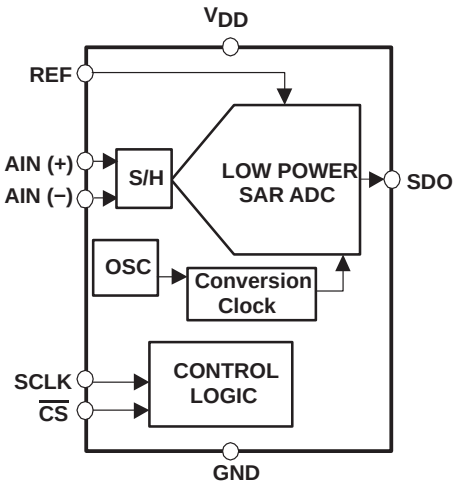

Terminal Functions

TLC3541 single channel unipolar ADCs

TERMINAL NAME	TERMINAL NO.	I/O	DESCRIPTION
AIN	4	I	Analog input channel
$\overline{CS}$	1	I	Chip select. A high-to-low transition on the $\overline{CS}$ input removes SDO from a high-impedance state within a maximum delay time. If the TLC3541 is attached to a dedicated TMS320 DSP serial port using the FS input, $\overline{CS}$ can be grounded.
FS	7	I	DSP frame sync input. Indication of a start of a serial data frame. A low-to-high transition removes SDO from the high-impedance state and the MSB is presented. Tie this pin to V_{DD} if not used.
GND	3	I	Ground return for the internal circuitry. Unless otherwise noted, all voltage measurements are with respect to GND.
SDO	8	O	The 3-state serial data output for the A/D conversion result. SDO is kept in the high-impedance state when $\overline{CS}$ is high. The output format is MSB first. Remaining data bits are presented on the rising edge of SCLK. When FS is not active (FS = 1 at the falling edge of $\overline{CS}$): The MSB is presented on the SDO pin on the falling edge of $\overline{CS}$ after a maximum delay time. Data is valid on each falling edge of SCLK until all data is read. When FS is active (FS = 0 at the falling edge of $\overline{CS}$): The MSB is presented to the SDO output on the rising edge of FS. Data is valid on the falling edge SCLK and changes on the rising edge SCLK (this is typically used with an active FS from a DSP). SDO returns to the high-impedance state after the 17th rising edge on SCLK. If a 17th SCLK cycle is not presented, as is the case when using an SPI host, SDO returns to the high-impedance state on the rising edge of $\overline{CS}$.
SCLK	5	I	Serial clock. This terminal receives the serial SCLK from the host processor.
REF	2	I	External voltage reference input
V_{DD}	6	I	Positive supply voltage

TLC3545 single channel pseudo-differential ADCs

TERMINAL NAME	TERMINAL NO.	I/O	DESCRIPTION
AIN0 (+)	4	I	Positive analog input for the TLC3545.
AIN1 (−)	5	I	Inverted analog input for the TLC3545.
$\overline{CS}$	1	I	Chip select. A high-to-low transition on $\overline{CS}$ removes SDO from the high-impedance state within a maximum delay time. The $\overline{CS}$ input can be connected to a DSP frame sync (FS) output when a dedicated TMS320 DSP serial port is used.
GND	3	I	Ground return for the internal circuitry. Unless otherwise noted, all voltage measurements are with respect to GND.
SDO	8	O	The 3-state serial data output for the A/D conversion result. SDO is kept in the high-impedance state when $\overline{CS}$ is high and presents output data after the $\overline{CS}$ falling edge until the LSB is presented. The output format is MSB first. The remaining data bits are presented on the rising edge of SCLK. Output data is valid on each falling edge of SCLK until all data is read. SDO returns to the high-impedance state after the 17th rising edge on SCLK. If a 17th SCLK cycle is not presented, as is the case when using an SPI host, SDO returns to the high-impedance state on the rising edge of $\overline{CS}$.
SCLK	7	I	Serial clock. This terminal receives the serial SCLK from the host processor.
REF	2	I	External voltage reference input
V_{DD}	6	I	Positive supply voltage

absolute maximum ratings over operating free-air temperature (unless otherwise noted)†

Supply voltage, GND to V_{DD} . . . . . −0.3 V to 6.5V
Analog input voltage range . . . . . −0.3 V to V_{DD}+0.3 V
Reference input voltage . . . . . V_{DD}+0.3 V
Digital input voltage range . . . . . −0.3 V to V_{DD}+0.3 V
Operating virtual junction temperature range, T_J . . . . . −40°C to 150°C
Operating free-air temperature range: T_A (I suffix) . . . . . −40°C to 85°C
Storage temperature range, T_{stg} . . . . . −65°C to 150°C
Lead temperature 1,6 mm (1/16 inch) from case for 10 seconds . . . . . 260°C

† Stresses beyond those listed under “absolute maximum ratings” may cause permanent damage to the device. These are stress ratings only, and functional operation of the device at these or any other conditions beyond those indicated under “recommended operating conditions” is not implied. Exposure to absolute-maximum-rated conditions for extended periods may affect device reliability.

recommended operating conditions

		MIN	NOM	MAX	UNIT
Supply voltage, V_{DD}		4.5	5	5.5	V
Frequency, SCLK	V_{DD} = 4.5 V to 5.5 V	100		15000	kHz
Tolerable clock jitter, SCLK	V_{DD} = 4.5 V to 5.5 V			97	ps
Aperature jitter	V_{DD} = 4.5 V to 5.5 V		100		ps
External reference voltage input, V_{REF}	External reference voltage input, V_{REF}	4		V_{DD}	V
V_{REF} input impedance	V_{DD} = 5 V, $\overline{CS}$ = 1, SCLK = 0	100			MΩ
	V_{DD} = 5 V, $\overline{CS}$ = 0, SCLK = 15 MHz	20	25		kΩ
External reference input current	V_{DD} = V_{REF} = 4.5 V, $\overline{CS}$=0, SCLK = 15 MHz		0.02	1	mA
Analog input voltage	AIN, AIN(+)	0		V_{DD}	V
	AIN(−)	−0.2		0.2	
High level control input voltage, V_{IH}		2.1			V
Low level control input voltage, V_{IL}				0.8	V
Operating free-air temperature, T_A	TLC3541/45I	−40		85	°C

electrical characteristics over recommended operating free-air temperature range, V_{DD} = 5 V, V_{REF} = 4.096 V, SCLK frequency = 15 MHz (unless otherwise noted)

PARAMETER		TEST CONDITIONS		MIN	TYP	MAX	UNIT
V_{OH}	High-level output voltage	V_{DD} = 4.5 V,	I_{OH} = −0.2 mA	3.9			V
V_{OL}	Low-level output voltage	V_{DD} = 4.5 V	I_{OL} = 0.8 mA			0.4	V
I_{OZ}	Off-state output current (high-impedance-state)	$V_O = V_{DD}$,	$\overline{CS} = V_{DD}$		1	2.5	µA
		V_O = 0,	$\overline{CS} = V_{DD}$		−1	−2.5	
I_{IH}	High-level input current	$V_I = V_{DD}$			0.005	2.5	µA
I_{IL}	Low-level input current	V_I = 0			−0.005	2.5	µA
I_{CC}	Operating supply current	$\overline{CS}$ at 0 V,	V_{DD} = 4.5 V to 5.5 V			3.5	mA
$I_{CC(PD)}$	Power-down supply current	For all digital inputs, 0≤ $V_I \le$ 0.3 V or $V_I \ge V_{DD}$ − 0.3 V, SCLK=V_{DD}, V_{DD} = 4.5 V to 5.5 V			3	5	µA
	Selected analog input channel leakage current	Selected channel at V_{DD}				1	µA
		Selected channel at 0 V				−1	
C_i	Input capacitance	Analog inputs			11	14	pF
		Control Inputs			20	25	
Z_i	Input resistance	V_{DD} = 5.5 V				500	Ω

ac specifications (TLC3541/45)

PARAMETER			TEST CONDITIONS	MIN	TYP	MAX	UNIT
SINAD	Signal-to-noise ratio +distortion		f_I = 15 kHz at 200 KSPS		81.5		dB
SNR	Signal-to-noise ratio		f_I = 15 kHz at 200 KSPS		82		dB
THD	Total harmonic distortion	TLC3541	f_I = 15 kHz at 200 KSPS		−94	−87	dB
		TLC3545	f_I = 15 kHz at 200 KSPS		−94	−89	
ENOB	Effective number of bits		f_I = 15 kHz at 200 KSPS		13.2		Bits
SFDR	Spurious free dynamic range	TLC3541	f_I = 15 kHz at 200 KSPS		−95	−87	dB
		TLC3545	f_I = 15 kHz at 200 KSPS		−95	−89	
	Full-power bandwidth, −3 dB, analog input				1		MHz
	Full-power bandwidth, −1 dB, analog input				500		kHz
Crosstalk			0.25 LSB	80			dB

dc specifications (TLC3541/45)

PARAMETER		TEST CONDITIONS	MIN	TYP†	MAX	UNIT
INL	Integral linearity error (see Note 1)		−1		1	LSB
DNL	Differential linearity error		−1	0.75	1	LSB
E_O	Offset error (see Note 2)	TLC3541	−3.5		3.5	mV
		TLC3545	−1		1	
E_G	Gain error (see Note 2)	TLC3541	−2		2	mV
		TLC3545	−1.8		1.8	

† All typical values are at V_{DD} = 5 V, T_A = 25°C.

NOTES: 1. Linear error is the maximum deviation from the best straight line through the A/D transfer characteristics.
2. Zero error is the difference between 0000h and the converted output for zero input voltage: full-scale error is the difference between ideal full-scale and the converted output for full-scale input voltage.

timing requirements, V_{DD} = 5 V, V_{REF} = 4.096 V, SCLK frequency = 15 MHz (unless otherwise specified)

		MIN	TYP	MAX	UNIT
$t_{cyc(SCLK)}$	SCLK cycle time, V_{DD} = 4.5 V to 5.5 V (see Note 3)	66		10000	ns
t_{w1}	Pulse duration, SCLK low	27		5000	ns
t_{w2}	Pulse duration, SCLK high	27		5000	ns
t_{h1}	Hold time, $\overline{CS}$ high after SCLK falling edge	3			ns
t_{su1}	Setup time, $\overline{CS}$ falling edge before the first SCLK falling edge	15			ns
t_{h2}	Hold time, $\overline{CS}$ low after 16th SCLK falling edge	5			ns
t_{w3}	Pulse duration, $\overline{CS}$ high	0.5			SCLKs
t_{d1}	Delay time, $\overline{CS}$ falling edge to SDO MSB valid, V_{DD} = V_{REF} = 4.5 V, 20 pF		12	17	ns
t_{d2}	Delay time, SCLK rising edge to next SDO data bit valid, V_{DD} = V_{REF} = 4.5 V, 20 pF			15	ns
t_{d3}	Delay time, 17th SCLK rising edge to 3-stated SDO, V_{DD} = V_{REF} = 4.5 V, 20 pF (see Note 4)			20	ns
t_{su3}	Setup time, $\overline{CS}$ falling edge before FS rising edge (TLC3541 only)	0.5	1		SCLKs
t_{w4}	Pulse duration, FS high (TLC3541 only)	0.5	1		SCLKs
t_{su4}	Setup time, FS rising edge before SCLK falling edge (TLC3541 only)	12.5			ns
t_{h4}	Hold time, FS high after SCLK falling edge (TLC3541 only)	5			ns
t_{su5}	Setup time, FS falling edge before 1st SCLK falling edge (TLC3541 only)	12			ns
t_{d4}	Delay time, FS rising edge to SDO MSB valid, (V_{DD} = V_{REF} = 4.5 V, 20 pF TLC3541 only)			15	ns
t_{h6}	Hold time, $\overline{CS}$ low after 1st SCLK falling edge	5			ns
t_{su6}	Setup time, $\overline{CS}$ rising edge before 9th (or the last) SCLK falling edge	5			ns
t_{h7}	Hold time, FS low after 1st SCLK falling edge (TLC3541 only)	5			ns
t_{su7}	Setup time, FS rising edge before 9th (or the last) SCLK falling edge	5			ns
$t_{cyc(reset)}$	Active $\overline{CS}$/FS cycle time, SCLK falling edges required to initialize ADC	1		8	SCLKs
t_{conv}	Conversion time (20 conversion clocks based on 7.5 MHz to 12 MHz OSC)	1.67		2.67	µs
t_s	Sample time, 20 SCLKs, SCLK up to 15 MHz	1.33		200	µs

NOTES: 3. Timing specifications given for 40/60 to 60/40 duty cycle

4. SDO goes into the high impedance state after detection of the 17th rising SCLK edge or a rising $\overline{CS}$ edge if a 17th SCLK is not presented.

TYPICAL CHARACTERISTICS

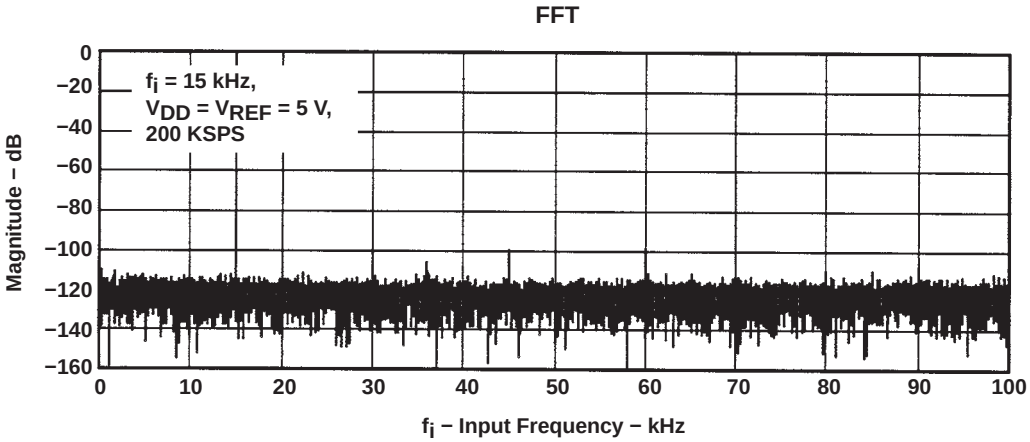

Figure 1

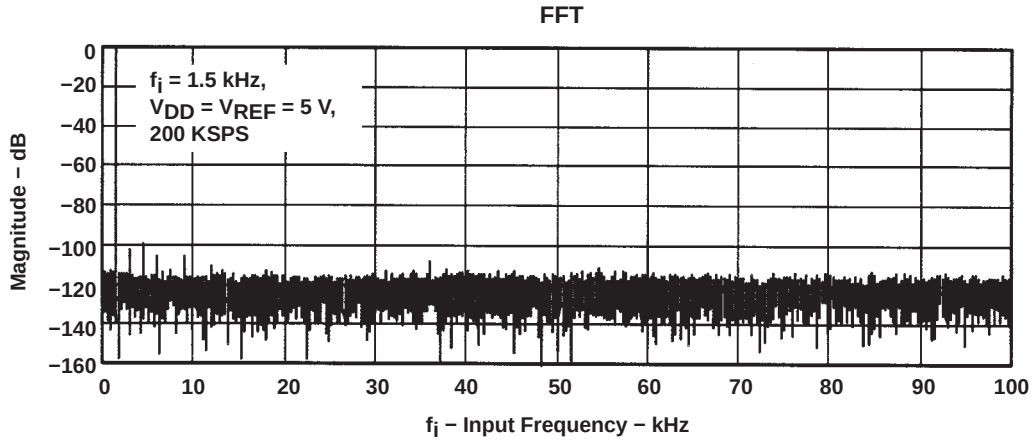

Figure 2

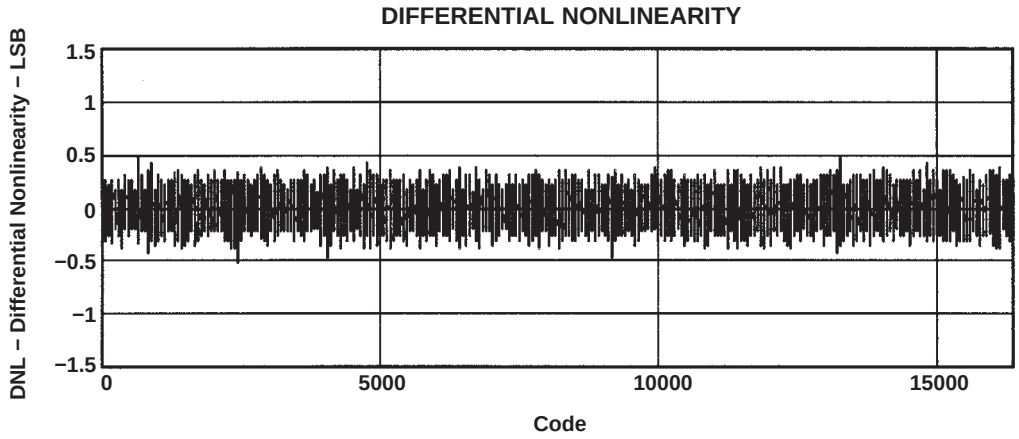

Figure 3

TYPICAL CHARACTERISTICS

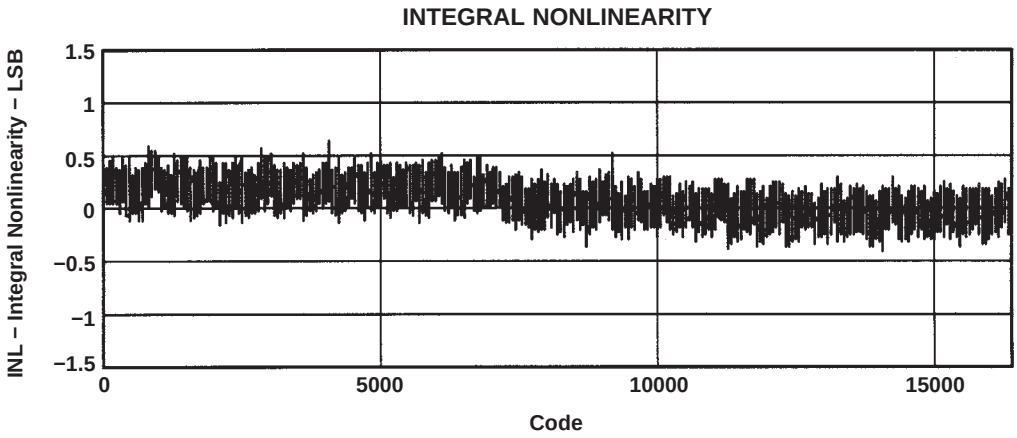

Figure 4

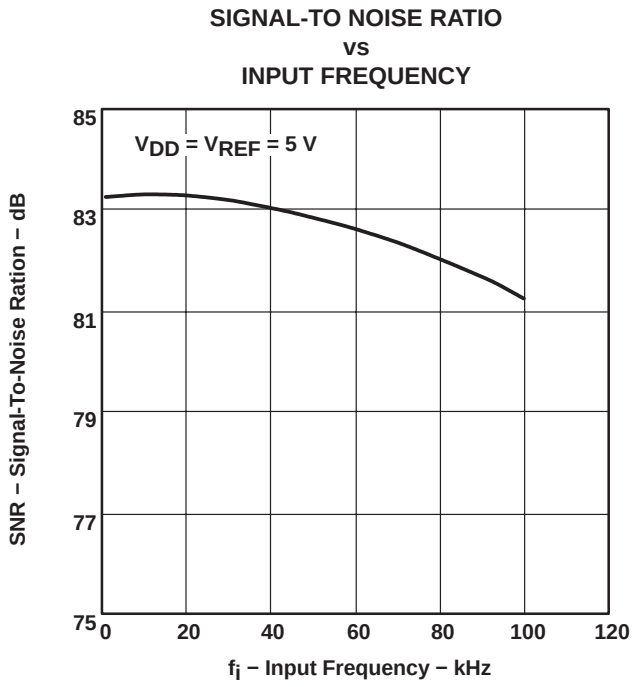

Figure 5

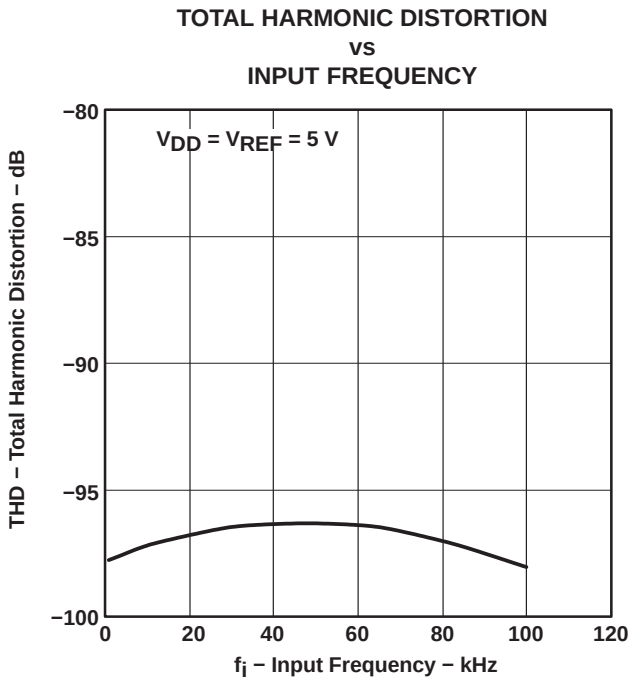

Figure 6

TYPICAL CHARACTERISTICS

TOTAL HARMONIC DISTORTION
vs
FREE-AIR TEMPERATURE

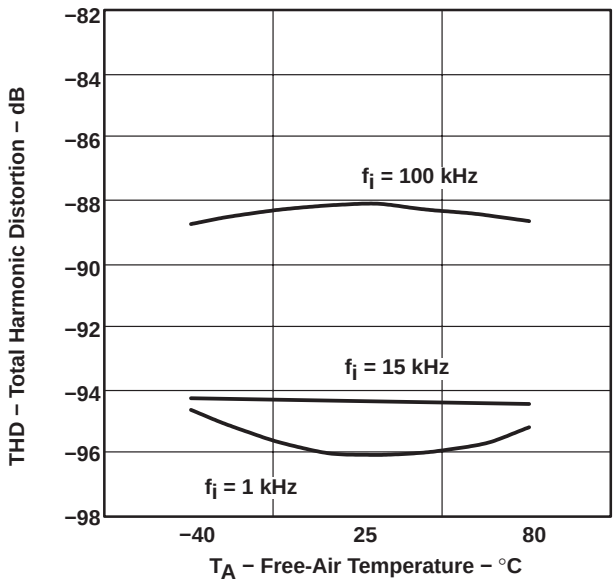

Figure 7

SIGNAL-TO-NOISE RATIO
vs
FREE-AIR TEMPERATURE

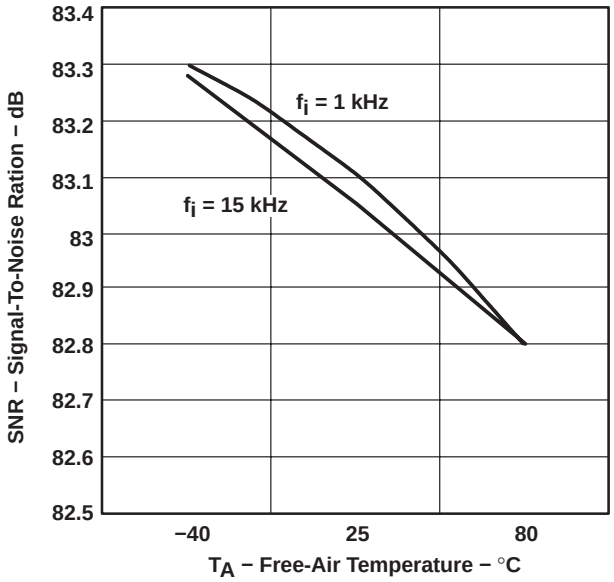

Figure 8

TOTAL HARMONIC DISTORTION
vs
REFERENCE VOLTAGE

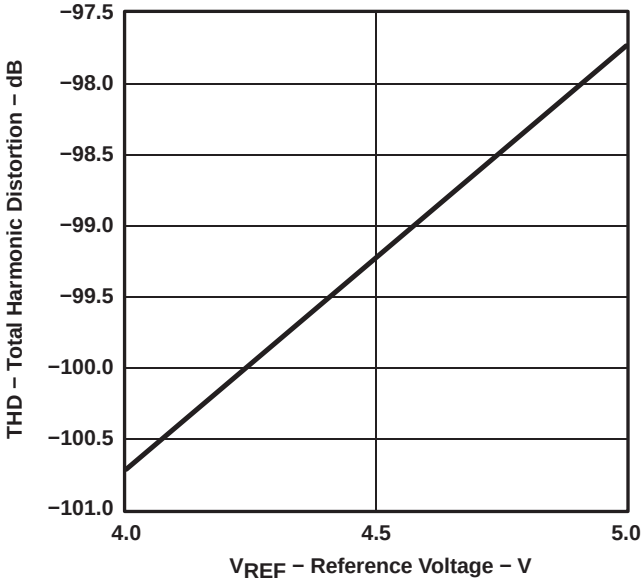

Figure 9

SIGNAL-TO-NOISE RATIO
vs
REFERENCE VOLTAGE

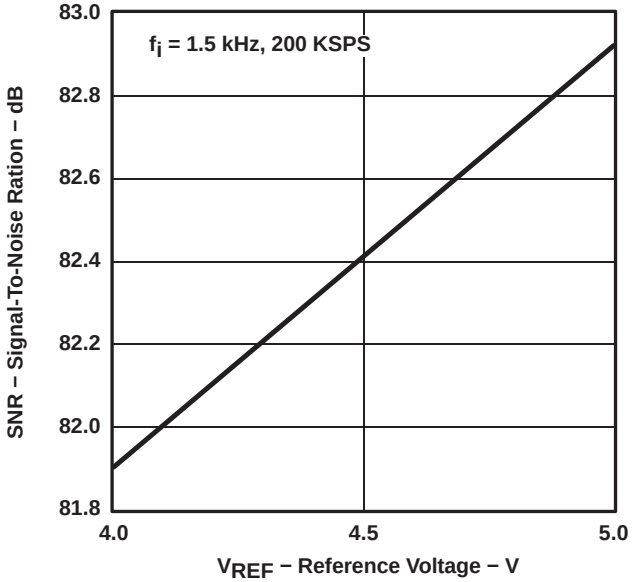

Figure 10

TYPICAL CHARACTERISTICS

MAXIMUM DIFFERENTIAL NONLINEARITY
vs
REFERENCE VOLTAGE

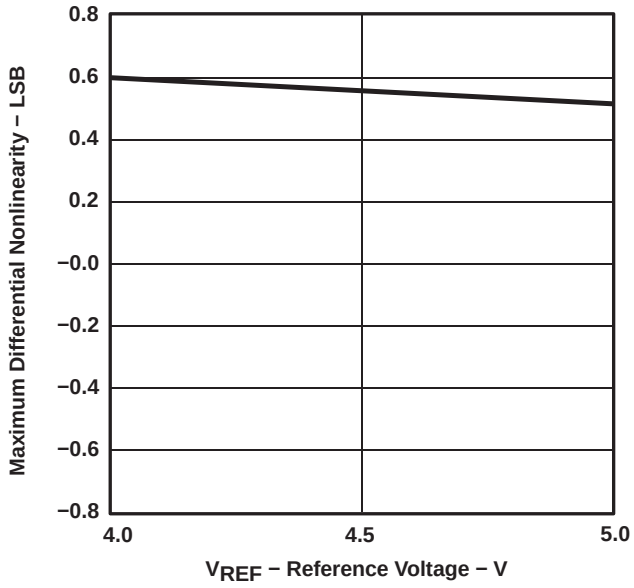

Figure 11

MINIMUM DIFFERENTIAL NONLINEARITY
vs
REFERENCE VOLTAGE

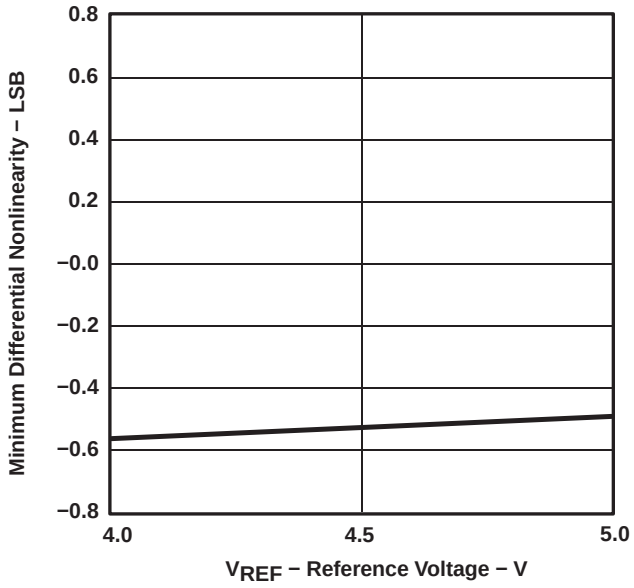

Figure 12

INTEGRAL NONLINEARITY
vs
REFERENCE VOLTAGE

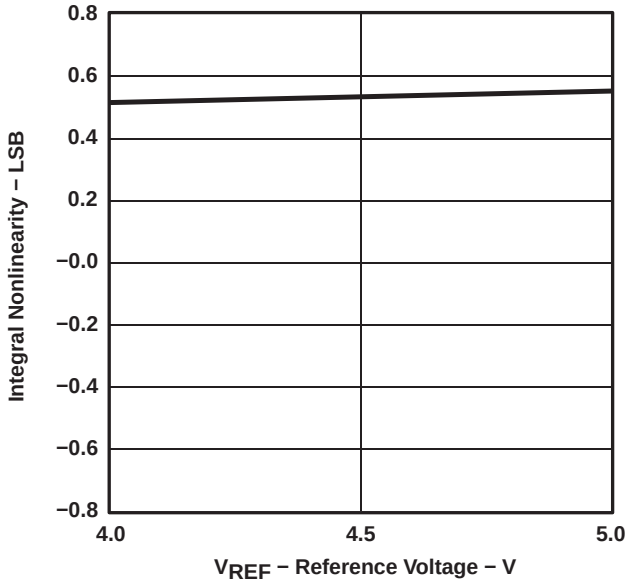

Figure 13

PRINCIPLES OF OPERATION

control and timing

device initialization/RESET cycle

The TLC3541/45 each require one RESET cycle after power-on for initialization in order to operate properly. The RESET cycle is initiated by asserting the $\overline{CS}$ pin (pin 1) low for a minimum duration of at least one SCLK falling edge but no more than 8 SCLK falling edges in length. The RESET cycle is terminated by asserting $\overline{CS}$ high. If a valid RESET cycle is issued, the data presented on the SDO output during the following cycle is 3FC0h. This output code is useful in determining when a valid reset/initialization has occurred.

The TLC3541 has separate $\overline{CS}$ and FS pins. In this case, it is also possible to initiate the RESET cycle by asserting FS low if $\overline{CS}$ is already asserted low. The RESET cycle can be terminated by either asserting $\overline{CS}$ high (as shown in the first RESET cycle in Figure 14), or by asserting FS high (as shown in the second RESET cycle in Figure 14), whichever happens first.

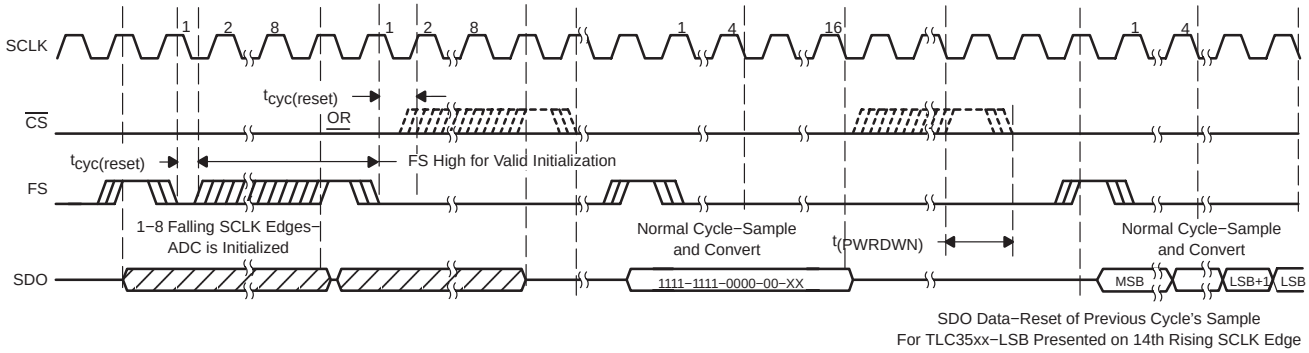

Figure 14. TLC3541/45 Initialization Timing

sampling

The converter sample time is 20 SCLKs in duration, beginning on the 5th SCLK received during an active signal on the $\overline{CS}$ input (or FS input for the TLC3541.)

conversion

Each device completes a conversion in the following manner. The conversion is started after the 24th falling SCLK edge. The $\overline{CS}$ input can be released at this point or at any time during the remainder of the conversion cycle. The conversion takes a maximum of 2.67 µs to complete. Enough time (for conversion) should be allowed before the next falling edge on the $\overline{CS}$ input (or rising edge on the FS input for the TLC3541) so that no conversion is terminated prematurely. If the conversion cycle is terminated early, the data presented on SDO during the following cycle is 3FC0h. This predefined output code is helpful in determining if the cycle time is not long enough to complete the conversion. The same code is also used to determine if a reset cycle is valid.

For all devices, the SDO data presented during a cycle is the result of the conversion of the sample taken during the previous cycle. The output data format is shown in the following table.

SERIAL OUTPUT DATA FORMAT		
	MSB [D15:D2]	**LSB [D1:D0]**
TLC3541/45	Conversion result (OD13−OD0)	Don't care

PRINCIPLES OF OPERATION

control and timing (continued)

sampling and conversion cycle

TLC3541:

Control via pin 1, $\overline{CS}$ (FS = 1 at the falling edge of $\overline{CS}$) − The falling edge of $\overline{CS}$ is the start of the cycle. Transitions on $\overline{CS}$ can occur when SCLK is high or low. The MSB may be read on the first falling SCLK edge after $\overline{CS}$ is low. Output data changes on the rising edge of SCLK. This control method is typically used for a microcontroller with an SPI interface, although it can also be used for a DSP. The microcontroller SPI interface should be programmed for CPOL = 0 (serial clock inactive low) and CPHA = 1 (data valid on the falling edge of serial clock).

Control via pin 7, FS ($\overline{CS}$ is tied/held low) − The rising edge of FS is the start of the cycle. Transitions on FS can occur when SCLK is high or low. The MSB is presented on SDO after the rising edge of FS. The MSB may be read on the first falling edge of SCLK after the FS falling edge. Output data changes on the rising edge of SCLK. This is the typical configuration when the ADC is the only device on the TMS320 DSP serial port.

Control via pin 1 and pin 7, $\overline{CS}$ and FS − Transitions on $\overline{CS}$ and FS can occur when SCLK is high or low. The MSB is presented after the rising edge of FS. The falling edge of FS is the start of the sampling cycle. The MSB may be read on the first falling edge of SCLK after the FS falling edge. Output data changes on the rising edge of SCLK. This is typically used for multiple devices connected to a single TMS320 DSP serial port.

TLC3545:

All control is provided using the $\overline{CS}$ input (pin 1) on the TLC3545. Transitions on $\overline{CS}$ can occur when SCLK is high or low. The cycle is started on the falling edge transition on the $\overline{CS}$ input. This signal can be provided by either a $\overline{CS}$ signal (when interfacing with an SPI microcontroller) or FS signal (when interfacing with a TMS320 DSP). The MSB is presented to SDO on the falling edge of the signal applied to pin 1 and may be read on the first falling SCLK edge after this input is low. Output data changes on the rising edge of SCLK.

control modes

control via pin 1 ($\overline{CS}$, SPI interface)

All devices are compatible with this mode of operation. A falling edge on the $\overline{CS}$ input initiates the cycle. (For the TLC3541, the FS input is tied to V_{DD}). The $\overline{CS}$ input remains low for the entire sampling time plus 4 SCLK decoding time (24 falling SCLK edges) and can then be released at any point during the remainder of the conversion. Enough time should be allowed before the next falling $\overline{CS}$ edge so that the conversion cycle is not terminated prematurely. The microcontroller SPI interface should be programmed for CPOL = 0 (serial clock inactive low) and CPHA = 1 (data is valid on the falling edge of serial clock).

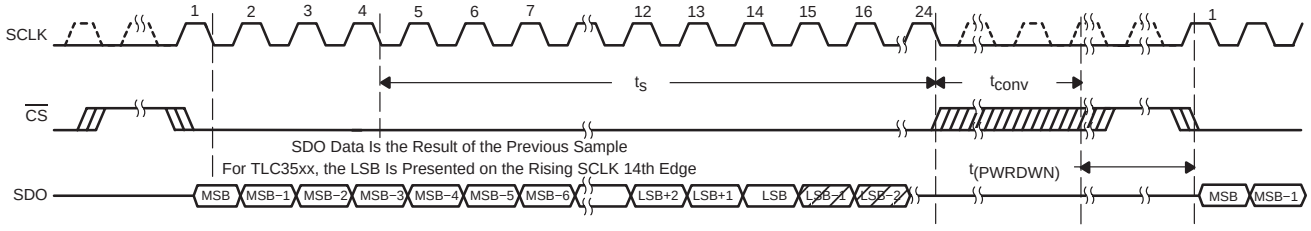

Figure 15. SPI Cycle TIming Using the CS Input (FS = 1 for TLC3541)

PRINCIPLES OF OPERATION

control via pin 1 (CS, DSP interface)

All devices are compatible with this mode of operation. The FS signal from a DSP is connected directly to the CS input of the ADC. A falling edge on the CS input while SCLK is high or low initiates the cycle. (For TLC3541 in this configuration, the FS input is tied to V_{DD}.) Enough time should be allowed before the next rising CS edge so that the conversion cycle is not terminated prematurely.

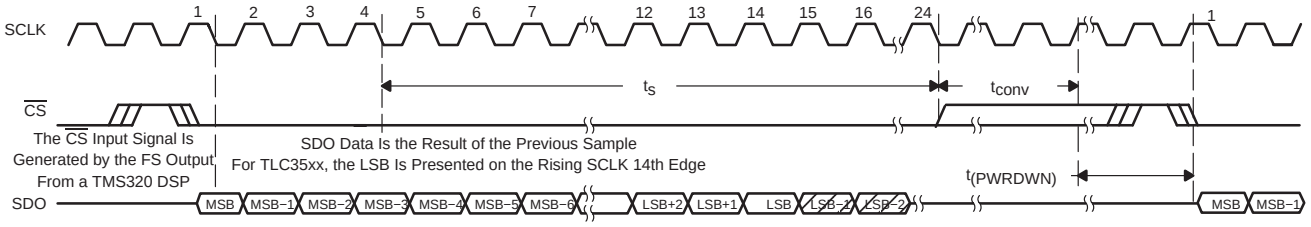

Figure 16. DSP Cycle Timing Using the CS Input (FS = 1 for TLC3541 only)

control via pin 1 and pin 7 (CS and FS or FS only, DSP interface)

Only TLC3541 is compatible with this mode of operation. The CS input to the ADC can be controlled via a general-purpose I/O pin from the DSP or tied to ground. The FS signal from the DSP is connected directly to the FS input of the ADC. A rising FS edge releases the MSB to the SDO output. The falling edge on the FS input while SCLK is high or low initiates the cycle. The CS input should remain low for the entire sampling time plus 4 SCLK decoding time after falling FS (24 falling SCLK edges) and can then be released at any time during the remainder of the conversion cycle. The optimum DSP interface is achieved when tying CS to ground and using only the FS input to control the ADC.

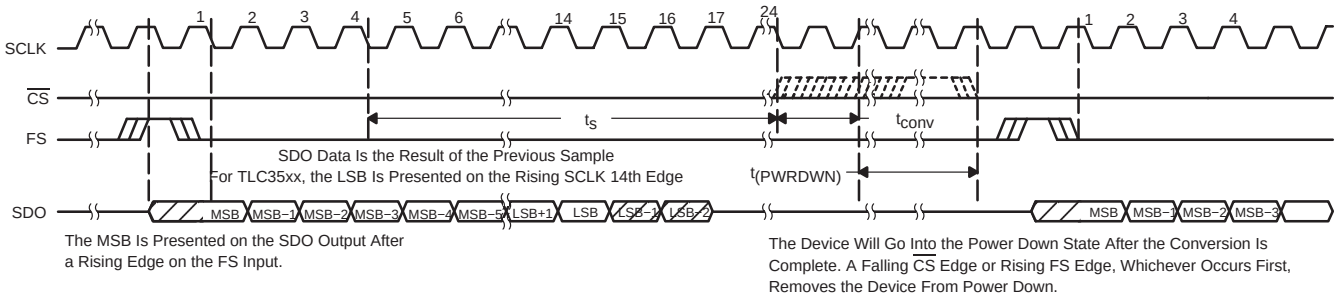

Figure 17. DSP Cycle Timing Using FS Only (or Using Both CS and FS for TLC3541)

PRINCIPLES OF OPERATION

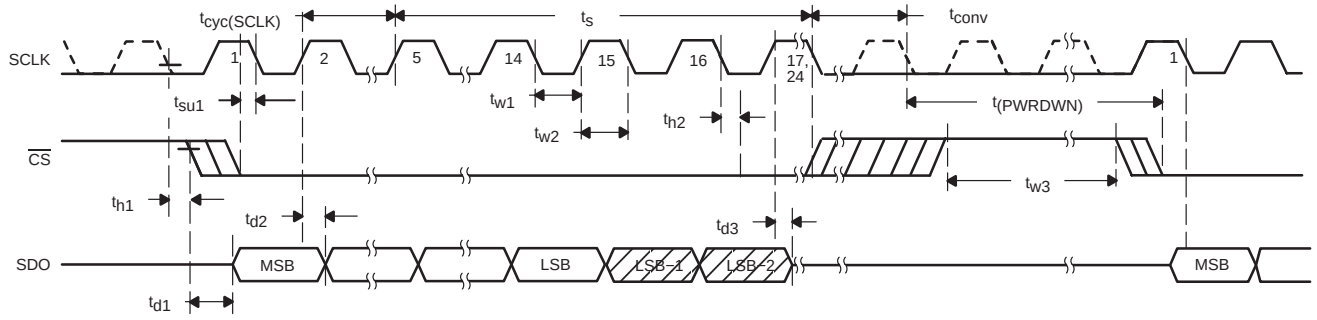

Figure 18. Critical Timing: Control Via CS Input (FS = 1 for TLC3541)

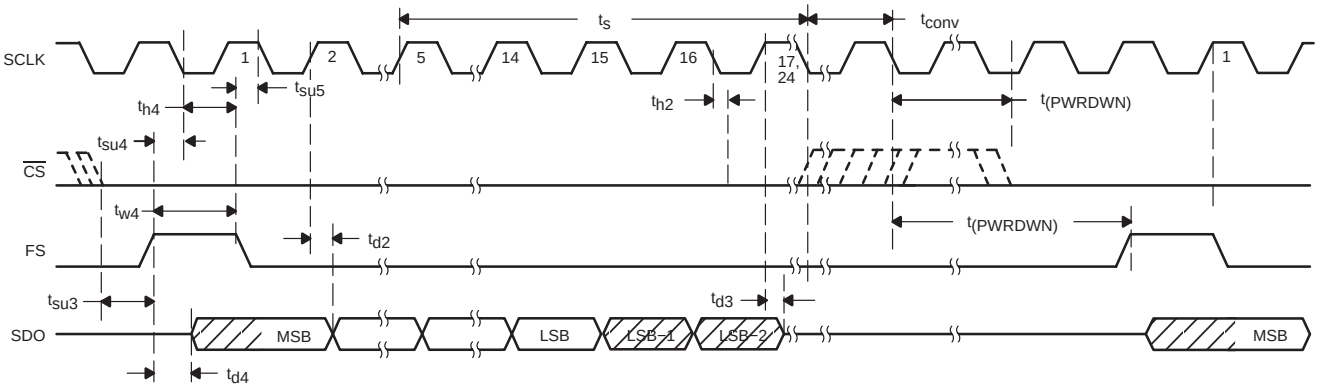

Figure 19. Critical Timing: Control Via CS and FS Inputs (TLC3541 Only)

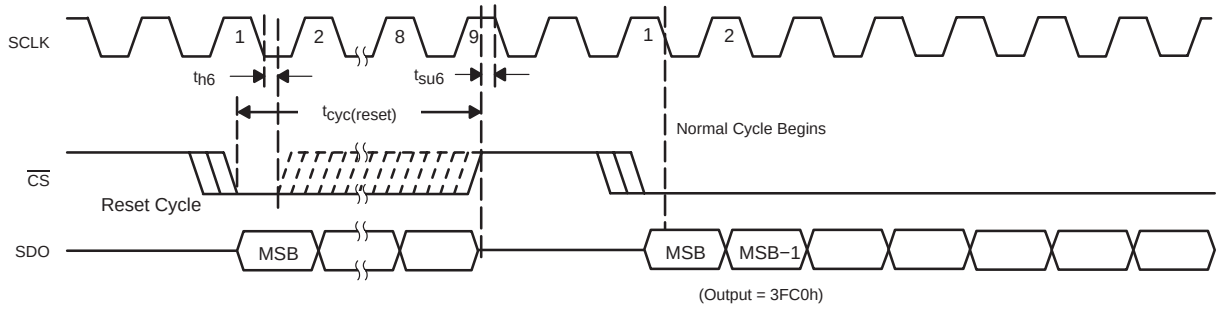

Figure 20. Critical Timing: Reset/Initialization Cycle (FS =1 for TLC3541)

PRINCIPLES OF OPERATION

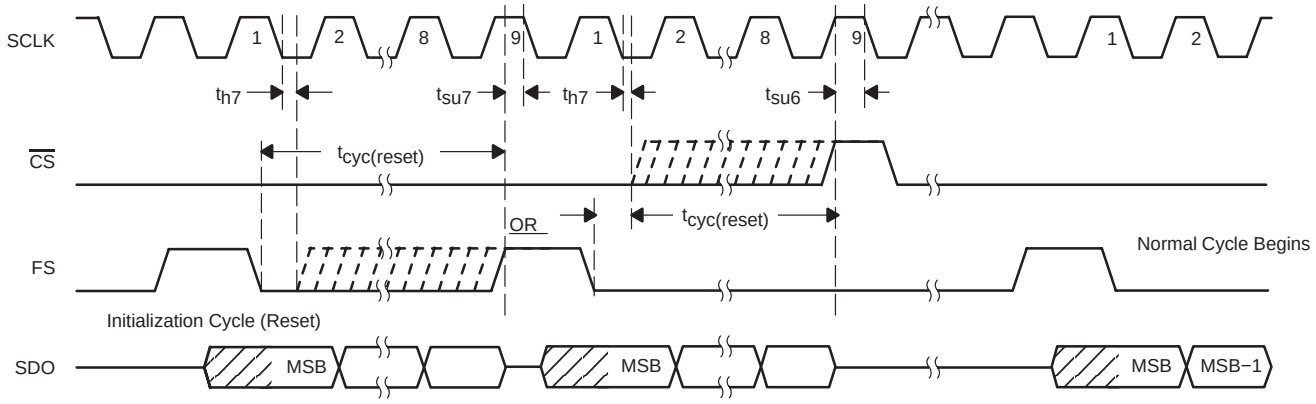

Figure 21. Critical Timing: Initialization Cycle (TLC3541 Only)

detailed description

The TLC3541/5 are successive approximation (SAR) ADCs utilizing a charge-redistribution DAC. Figure 22 shows a simplified version of the ADC. The sampling capacitor acquires the signal on AIN (or the AIN(+) pin for TLC3545) during the sampling period. When the conversion process starts, the SAR control logic and charge redistribution DAC are used to add and subtract fixed amounts of charge from the sampling capacitor to bring the comparator into a balanced condition. When the comparator is balanced, the conversion is complete and the ADC output code is generated.

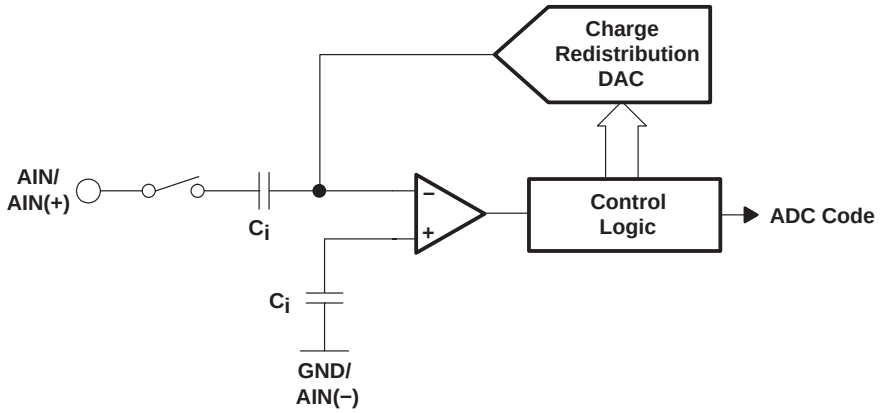

Figure 22. Simplified SAR Circuit

PRINCIPLES OF OPERATION

pseudo-differential inputs

The TLC3545 operates in pseudo-differential mode. The inverted input is available on pin 5. The inverted input can tolerate a maximum input ripple of ±0.2 V. It is normally used for zero-scale offset cancellation or ground noise rejection.

serial interface

Output data format is binary (unipolar straight binary).

binary

- Zero-Scale Code = 0000h, V_{AIN} = GND
- Full-Scale Code = 3FFFh, $V_{AIN} = V_{REF} – 1$ LSB

reference voltage

An external reference must be applied via pin 2, V_{REF}. The voltage level applied to this pin establishes the upper limit of the analog inputs to produce a full-scale reading. The value of V_{REF}, and the analog input should not exceed the positive supply or be less than GND, consistent with the specified absolute maximum ratings. The digital output is at full scale when the input signal is equal to or higher than V_{REF} and at zero when the input signal is equal to or less than GND.

auto-power down and power up

Auto-power down is built into the devices in order to reduce power consumption. The wake-up time is fast enough to provide power down between each conversion cycle. The power-down state is initiated at the end of conversion and wakes up on a falling $\overline{CS}$ edge (or rising FS edge, whichever occurs first, for TLC3541 only).

APPLICATION INFORMATION

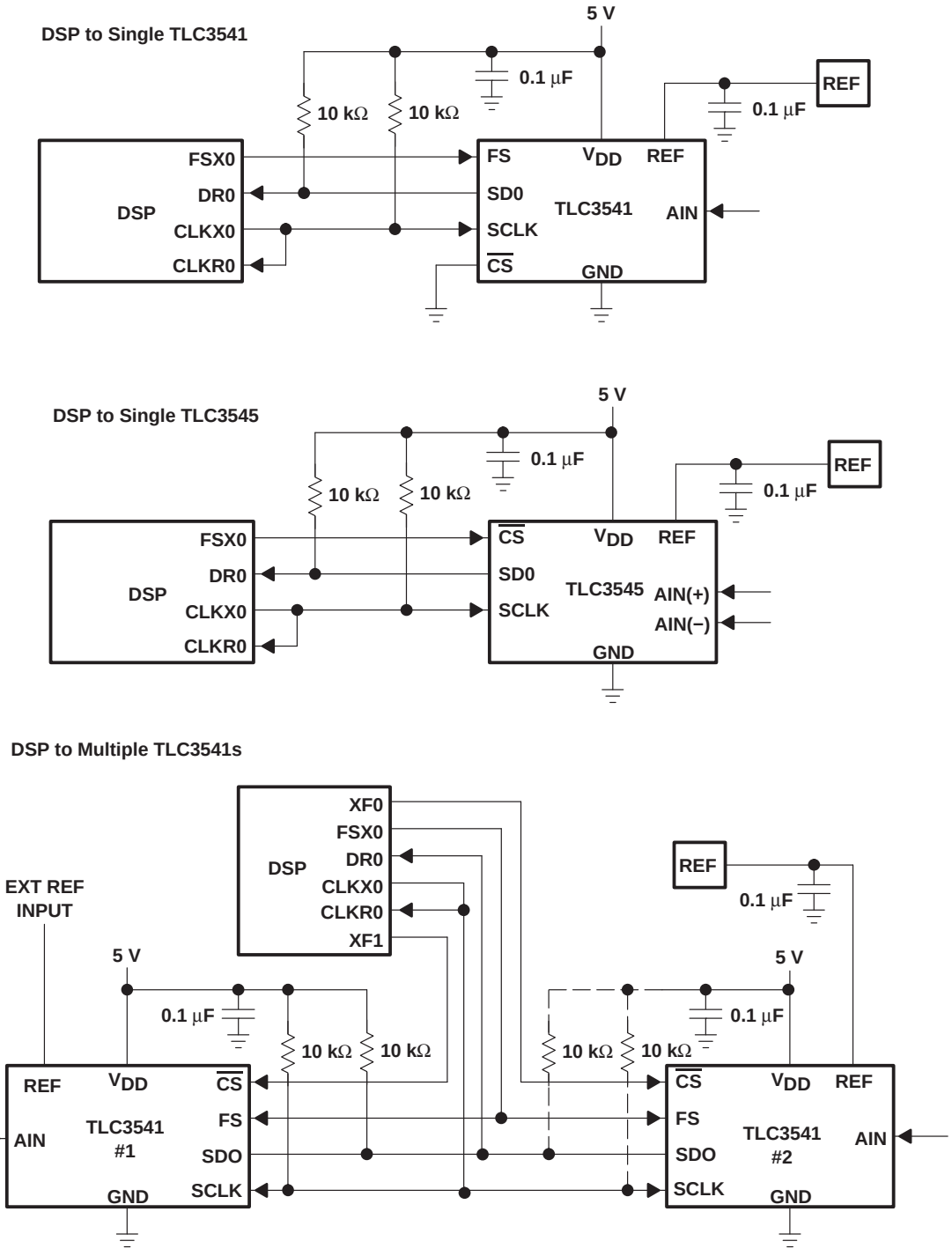

Figure 23. Typical ADC Interface to a TMS320 DSP

PACKAGING INFORMATION

Orderable Device	Status (1)	Package Type	Package Drawing	Pins	Package Qty	Eco Plan (2)	Lead/ Ball Finish	MSL Peak Temp (3)	Samples (Requires Login)
TLC3541ID	ACTIVE	SOIC	D	8	75	Green (RoHS & no Sb/Br)	CU NIPDAU	Level-1-260C-UNLIM	Request Free Samples
TLC3541IDG4	ACTIVE	SOIC	D	8	75	Green (RoHS & no Sb/Br)	CU NIPDAU	Level-1-260C-UNLIM	Request Free Samples
TLC3541IDGK	ACTIVE	MSOP	DGK	8	80	Green (RoHS & no Sb/Br)	CU NIPDAUAG	Level-1-260C-UNLIM	Request Free Samples
TLC3541IDGKG4	ACTIVE	MSOP	DGK	8	80	Green (RoHS & no Sb/Br)	CU NIPDAUAG	Level-1-260C-UNLIM	Request Free Samples
TLC3541IDGKR	ACTIVE	MSOP	DGK	8	2500	Green (RoHS & no Sb/Br)	CU NIPDAUAG	Level-1-260C-UNLIM	Purchase Samples
TLC3541IDGKRG4	ACTIVE	MSOP	DGK	8	2500	Green (RoHS & no Sb/Br)	CU NIPDAUAG	Level-1-260C-UNLIM	Purchase Samples
TLC3541IDR	ACTIVE	SOIC	D	8	2500	Green (RoHS & no Sb/Br)	CU NIPDAU	Level-1-260C-UNLIM	Purchase Samples
TLC3541IDRG4	ACTIVE	SOIC	D	8	2500	Green (RoHS & no Sb/Br)	CU NIPDAU	Level-1-260C-UNLIM	Purchase Samples
TLC3545ID	ACTIVE	SOIC	D	8	75	Green (RoHS & no Sb/Br)	CU NIPDAU	Level-1-260C-UNLIM	Request Free Samples
TLC3545IDG4	ACTIVE	SOIC	D	8	75	Green (RoHS & no Sb/Br)	CU NIPDAU	Level-1-260C-UNLIM	Request Free Samples
TLC3545IDGK	ACTIVE	MSOP	DGK	8	80	Green (RoHS & no Sb/Br)	CU NIPDAUAG	Level-1-260C-UNLIM	Request Free Samples
TLC3545IDGKG4	ACTIVE	MSOP	DGK	8	80	Green (RoHS & no Sb/Br)	CU NIPDAUAG	Level-1-260C-UNLIM	Request Free Samples
TLC3545IDR	ACTIVE	SOIC	D	8	2500	Green (RoHS & no Sb/Br)	CU NIPDAU	Level-1-260C-UNLIM	Purchase Samples
TLC3545IDRG4	ACTIVE	SOIC	D	8	2500	Green (RoHS & no Sb/Br)	CU NIPDAU	Level-1-260C-UNLIM	Purchase Samples

(1) The marketing status values are defined as follows:
ACTIVE: Product device recommended for new designs.
LIFEBUY: TI has announced that the device will be discontinued, and a lifetime-buy period is in effect.
NRND: Not recommended for new designs. Device is in production to support existing customers, but TI does not recommend using this part in a new design.
PREVIEW: Device has been announced but is not in production. Samples may or may not be available.
OBSOLETE: TI has discontinued the production of the device.

(2) Eco Plan - The planned eco-friendly classification: Pb-Free (RoHS), Pb-Free (RoHS Exempt), or Green (RoHS & no Sb/Br) - please check http://www.ti.com/productcontent for the latest availability information and additional product content details.
TBD: The Pb-Free/Green conversion plan has not been defined.
Pb-Free (RoHS): TI's terms "Lead-Free" or "Pb-Free" mean semiconductor products that are compatible with the current RoHS requirements for all 6 substances, including the requirement that lead not exceed 0.1% by weight in homogeneous materials. Where designed to be soldered at high temperatures, TI Pb-Free products are suitable for use in specified lead-free processes.
Pb-Free (RoHS Exempt): This component has a RoHS exemption for either 1) lead-based flip-chip solder bumps used between the die and package, or 2) lead-based die adhesive used between the die and leadframe. The component is otherwise considered Pb-Free (RoHS compatible) as defined above.
Green (RoHS & no Sb/Br): TI defines "Green" to mean Pb-Free (RoHS compatible), and free of Bromine (Br) and Antimony (Sb) based flame retardants (Br or Sb do not exceed 0.1% by weight in homogeneous material)

(3) MSL, Peak Temp. -- The Moisture Sensitivity Level rating according to the JEDEC industry standard classifications, and peak solder temperature.

Important Information and Disclaimer: The information provided on this page represents TI's knowledge and belief as of the date that it is provided. TI bases its knowledge and belief on information provided by third parties, and makes no representation or warranty as to the accuracy of such information. Efforts are underway to better integrate information from third parties. TI has taken and continues to take reasonable steps to provide representative and accurate information but may not have conducted destructive testing or chemical analysis on incoming materials and chemicals. TI and TI suppliers consider certain information to be proprietary, and thus CAS numbers and other limited information may not be available for release.

In no event shall TI's liability arising out of such information exceed the total purchase price of the TI part(s) at issue in this document sold by TI to Customer on an annual basis.

TAPE AND REEL INFORMATION

REEL DIMENSIONS

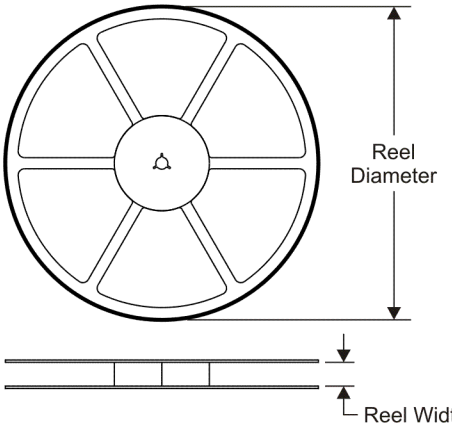

TAPE DIMENSIONS

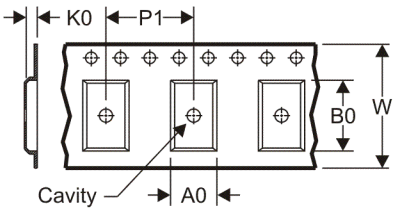

A0	Dimension designed to accommodate the component width
B0	Dimension designed to accommodate the component length
K0	Dimension designed to accommodate the component thickness
W	Overall width of the carrier tape
P1	Pitch between successive cavity centers

QUADRANT ASSIGNMENTS FOR PIN 1 ORIENTATION IN TAPE

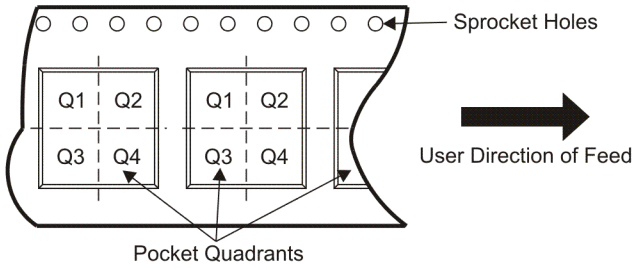

*All dimensions are nominal

Device	Package Type	Package Drawing	Pins	SPQ	Reel Diameter (mm)	Reel Width W1 (mm)	A0 (mm)	B0 (mm)	K0 (mm)	P1 (mm)	W (mm)	Pin1 Quadrant
TLC3541IDGKR	MSOP	DGK	8	2500	330.0	12.4	5.3	3.4	1.4	8.0	12.0	Q1
TLC3541IDR	SOIC	D	8	2500	330.0	12.4	6.4	5.2	2.1	8.0	12.0	Q1
TLC3545IDR	SOIC	D	8	2500	330.0	12.4	6.4	5.2	2.1	8.0	12.0	Q1

TAPE AND REEL BOX DIMENSIONS

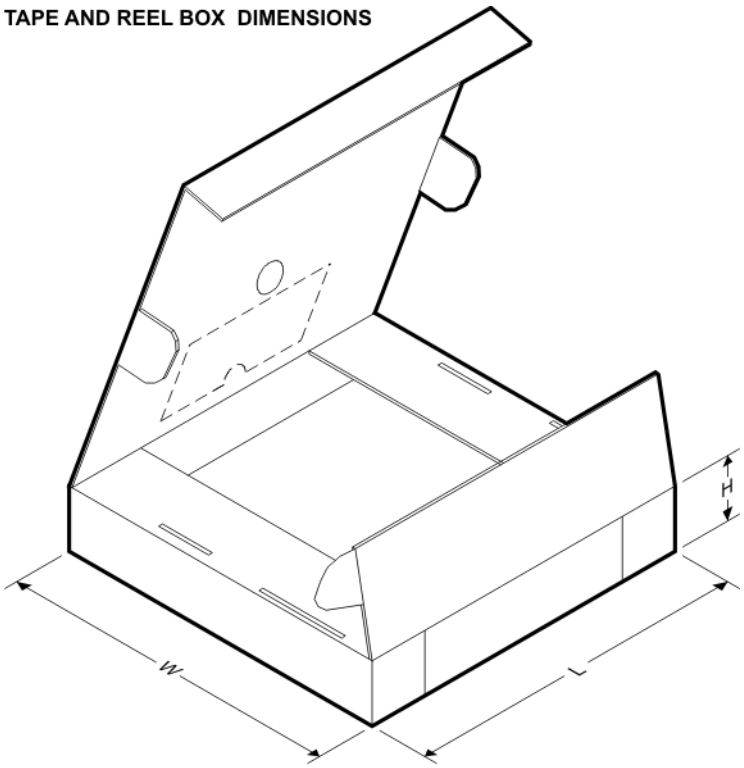

*All dimensions are nominal

Device	Package Type	Package Drawing	Pins	SPQ	Length (mm)	Width (mm)	Height (mm)
TLC3541IDGKR	MSOP	DGK	8	2500	346.0	346.0	29.0
TLC3541IDR	SOIC	D	8	2500	346.0	346.0	29.0
TLC3545IDR	SOIC	D	8	2500	346.0	346.0	29.0

DGK (S–PDSO–G8) PLASTIC SMALL–OUTLINE PACKAGE

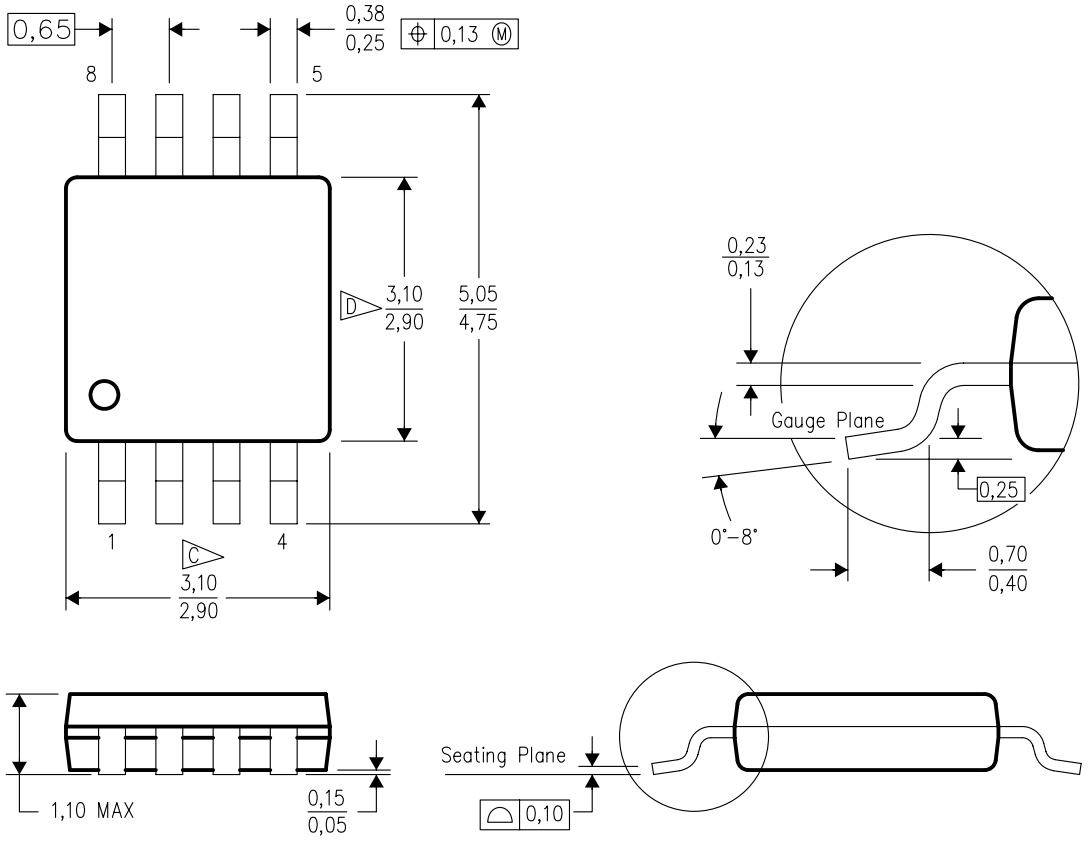

4073329/E 05/06

NOTES:
A. All linear dimensions are in millimeters.
B. This drawing is subject to change without notice.
C. Body length does not include mold flash, protrusions, or gate burrs. Mold flash, protrusions, or gate burrs shall not exceed 0.15 per end.
D. Body width does not include interlead flash. Interlead flash shall not exceed 0.50 per side.
E. Falls within JEDEC MO–187 variation AA, except interlead flash.

D (R–PDSO–G8) PLASTIC SMALL OUTLINE

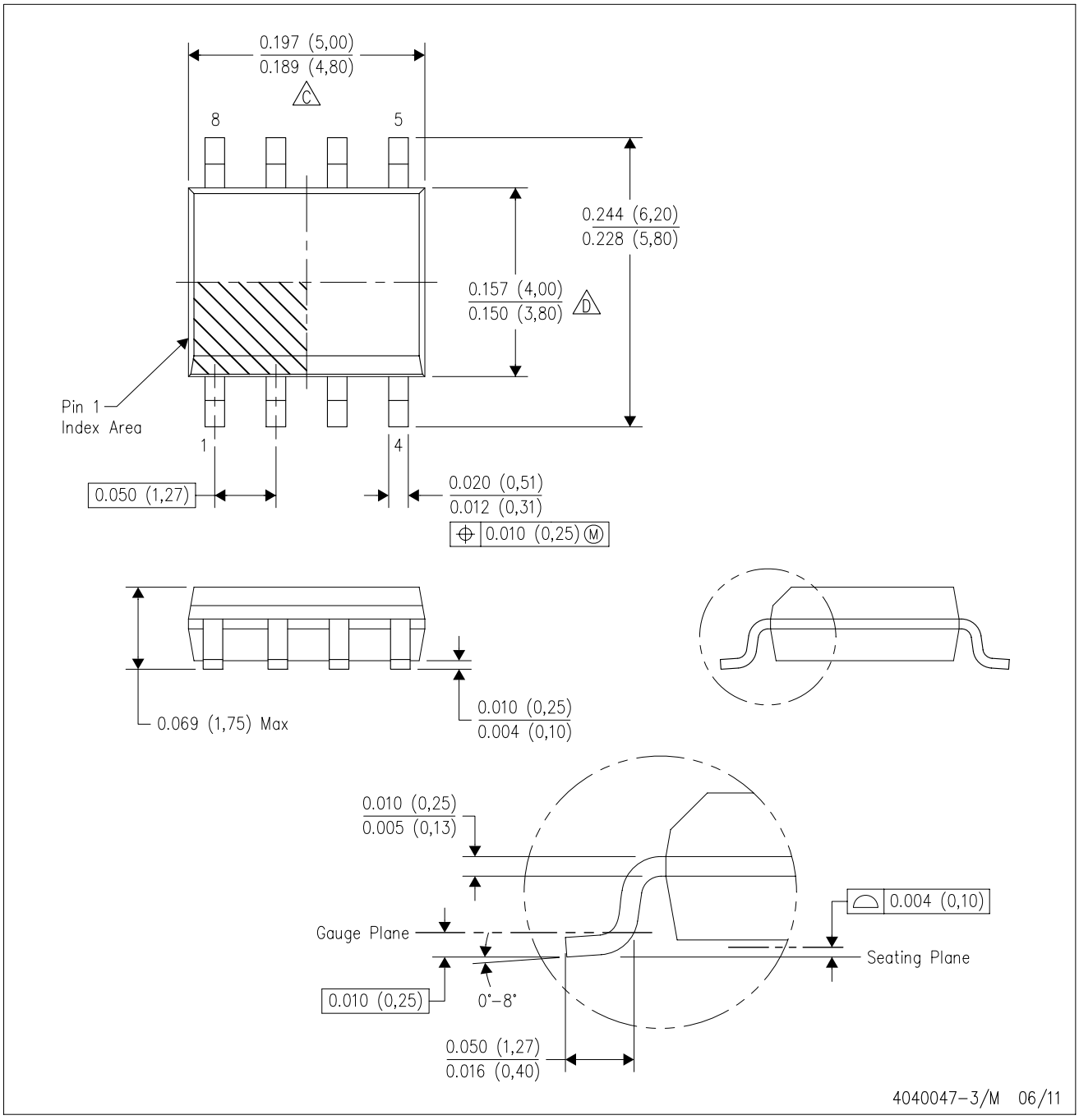

NOTES:
A. All linear dimensions are in inches (millimeters).
B. This drawing is subject to change without notice.
C. Body length does not include mold flash, protrusions, or gate burrs. Mold flash, protrusions, or gate burrs shall not exceed 0.006 (0,15) each side.
D. Body width does not include interlead flash. Interlead flash shall not exceed 0.017 (0,43) each side.
E. Reference JEDEC MS–012 variation AA.

IMPORTANT NOTICE

Texas Instruments Incorporated and its subsidiaries (TI) reserve the right to make corrections, modifications, enhancements, improvements, and other changes to its products and services at any time and to discontinue any product or service without notice. Customers should obtain the latest relevant information before placing orders and should verify that such information is current and complete. All products are sold subject to TI's terms and conditions of sale supplied at the time of order acknowledgment.

TI warrants performance of its hardware products to the specifications applicable at the time of sale in accordance with TI's standard warranty. Testing and other quality control techniques are used to the extent TI deems necessary to support this warranty. Except where mandated by government requirements, testing of all parameters of each product is not necessarily performed.

TI assumes no liability for applications assistance or customer product design. Customers are responsible for their products and applications using TI components. To minimize the risks associated with customer products and applications, customers should provide adequate design and operating safeguards.

TI does not warrant or represent that any license, either express or implied, is granted under any TI patent right, copyright, mask work right, or other TI intellectual property right relating to any combination, machine, or process in which TI products or services are used. Information published by TI regarding third-party products or services does not constitute a license from TI to use such products or services or a warranty or endorsement thereof. Use of such information may require a license from a third party under the patents or other intellectual property of the third party, or a license from TI under the patents or other intellectual property of TI.

Reproduction of TI information in TI data books or data sheets is permissible only if reproduction is without alteration and is accompanied by all associated warranties, conditions, limitations, and notices. Reproduction of this information with alteration is an unfair and deceptive business practice. TI is not responsible or liable for such altered documentation. Information of third parties may be subject to additional restrictions.

Resale of TI products or services with statements different from or beyond the parameters stated by TI for that product or service voids all express and any implied warranties for the associated TI product or service and is an unfair and deceptive business practice. TI is not responsible or liable for any such statements.

TI products are not authorized for use in safety-critical applications (such as life support) where a failure of the TI product would reasonably be expected to cause severe personal injury or death, unless officers of the parties have executed an agreement specifically governing such use. Buyers represent that they have all necessary expertise in the safety and regulatory ramifications of their applications, and acknowledge and agree that they are solely responsible for all legal, regulatory and safety-related requirements concerning their products and any use of TI products in such safety-critical applications, notwithstanding any applications-related information or support that may be provided by TI. Further, Buyers must fully indemnify TI and its representatives against any damages arising out of the use of TI products in such safety-critical applications.

TI products are neither designed nor intended for use in military/aerospace applications or environments unless the TI products are specifically designated by TI as military-grade or "enhanced plastic." Only products designated by TI as military-grade meet military specifications. Buyers acknowledge and agree that any such use of TI products which TI has not designated as military-grade is solely at the Buyer's risk, and that they are solely responsible for compliance with all legal and regulatory requirements in connection with such use.

TI products are neither designed nor intended for use in automotive applications or environments unless the specific TI products are designated by TI as compliant with ISO/TS 16949 requirements. Buyers acknowledge and agree that, if they use any non-designated products in automotive applications, TI will not be responsible for any failure to meet such requirements.

Following are URLs where you can obtain information on other Texas Instruments products and application solutions:

Products		**Applications**	
Audio	www.ti.com/audio	Communications and Telecom	www.ti.com/communications
Amplifiers	amplifier.ti.com	Computers and Peripherals	www.ti.com/computers
Data Converters	dataconverter.ti.com	Consumer Electronics	www.ti.com/consumer-apps
DLP® Products	www.dlp.com	Energy and Lighting	www.ti.com/energy
DSP	dsp.ti.com	Industrial	www.ti.com/industrial
Clocks and Timers	www.ti.com/clocks	Medical	www.ti.com/medical
Interface	interface.ti.com	Security	www.ti.com/security
Logic	logic.ti.com	Space, Avionics and Defense	www.ti.com/space-avionics-defense
Power Mgmt	power.ti.com	Transportation and Automotive	www.ti.com/automotive
Microcontrollers	microcontroller.ti.com	Video and Imaging	www.ti.com/video
RFID	www.ti-rfid.com	Wireless	www.ti.com/wireless-apps
RF/IF and ZigBee® Solutions	www.ti.com/lprf		
	TI E2E Community Home Page		e2e.ti.com

Mailing Address: Texas Instruments, Post Office Box 655303, Dallas, Texas 75265
Copyright © 2011, Texas Instruments Incorporated