TAI-SAW TECHNOLOGY CO., LTD.

No. 3, Industrial 2nd Rd., Ping-Chen Industrial District,
Taoyuan, 324, Taiwan, R.O.C.
TEL: 886-3-4690038 FAX: 886-3-4697532
E-mail: tstsales@mail.taisaw.com Web: www.taisaw.com

Product Specifications Approval Sheet

Product Name: SAW Filter 455MHz SMD 3.0X3.0 mm (BW=5 MHz)

TST Parts No.: TA2738AA3110

Customer Parts No.:_____

Customer signature required

Company:_____

Division:_____

Approved by :_____

Date:_____

Checked by:_____ Anne Chen _____ Anne Chen

Approved by:_____ Andy Yu _____ Andy Yu

Date:_____ 02 / 22 / 2021 _____

1. Customer signed back is required before TST can proceed with sample build and receive orders.
2. Orders received without customer signed back will be regarded as agreement on the specifications.
3. Any specifications changes must be approved upon by both parties and a new revision of specifications shall be released to reflect the changes.

TAI-SAW TECHNOLOGY CO., LTD.

No. 3, Industrial 2nd Rd., Ping-Chen Industrial District,
Taoyuan, 324, Taiwan, R.O.C.
TEL: 886-3-4690038 FAX: 886-3-4697532
E-mail: tstsales@mail.taisaw.com Web: www.taisaw.com

SAW Filter 455 MHz

MODEL NO.: TA2738AA3110 REV. No.: 1.0

A. MAXIMUM RATING:

1.Input Power Level: 26dB$_m$

2.DC voltage: 3 V

3.Operating Temperature: : -40℃ to +85℃

4.Storage Temperature: -40℃ to +85℃

5. Moisture Sensitivity Level: Level 1 (MSL 1)

RoHS Compliant

Lead-free soldering

Electrostatic **S**ensitive **D**evice

B. ELECTRICAL CHARACTERISTICS:

Item	Unit	Min.	Typ.	Max.
Center frequency **Fc**	MHz	-	455	-
Insertion loss (452.5 ~457.5 MHz) **IL**	dB	-	2.7	3.2
Amplitude Variation(452.5 ~457.5 MHz)	dB	-	1.1	2.0
Attenuation (Reference level from 0 dB)				
430 MHz	dB	50	65	-
470 MHz	dB	30	40	-
Temperature Coefficient of Frequency	ppm/℃	-	-36 typ.	-

C. MEASUREMENT CIRCUIT:

HP Network analyzer

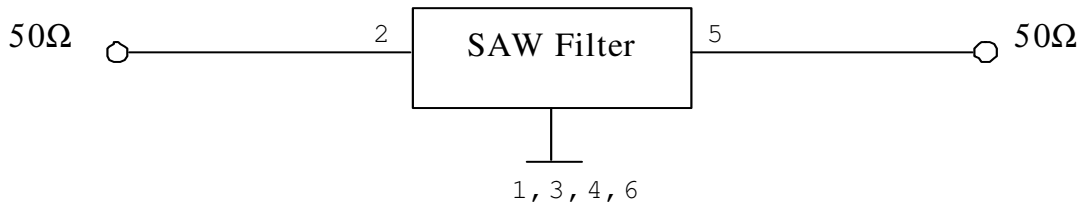

D.OUTLINE DRAWING:

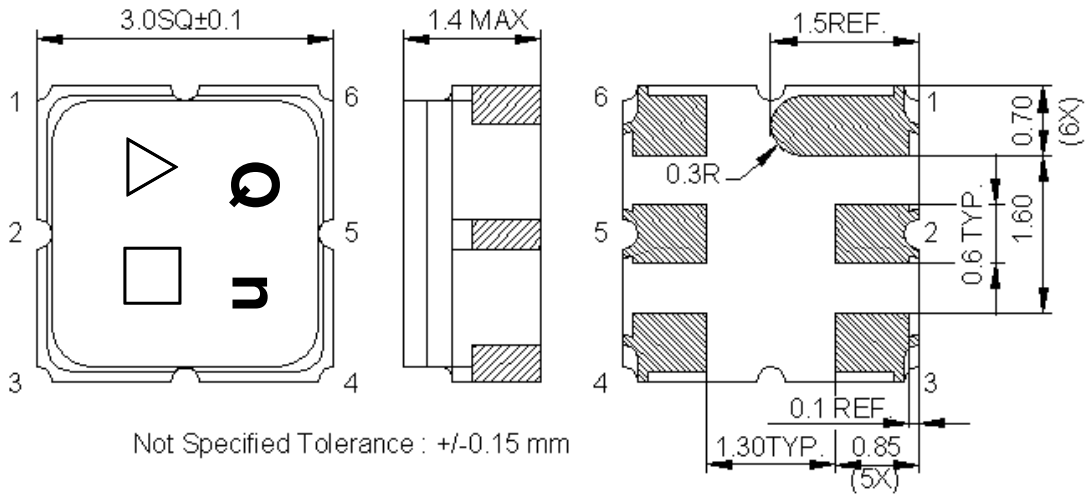

2 : Input
5 : Output
1,3,4,6 : Ground
Unit : mm

△ : Year Code(2020➔0,…2023➔3,…,2029➔9)
□: Date Code(Follow the table from planner each year)

WK01	WK02	WK03	WK04	WK05	WK06	WK07	WK08	WK09	WK10	WK11	WK12	WK13
A	B	C	D	E	F	G	H	I	J	K	L	M
WK14	WK15	WK16	WK17	WK18	WK19	WK20	WK21	WK22	WK23	WK24	WK25	WK26
N	O	P	Q	R	S	T	U	V	W	X	Y	Z
WK27	WK28	WK29	WK30	WK31	WK32	WK33	WK34	WK35	WK36	WK37	WK38	WK39
a	b	c	d	e	f	g	h	i	j	k	l	m
WK40	WK41	WK42	WK43	WK44	WK45	WK46	WK47	WK48	WK49	WK50	WK51	WK52
n	o	p	q	r	s	t	u	v	w	x	y	z

E. PCB Footprint：

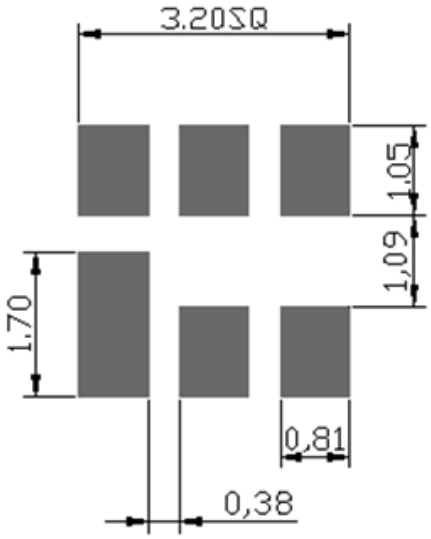

F. Frequency Characteristics:

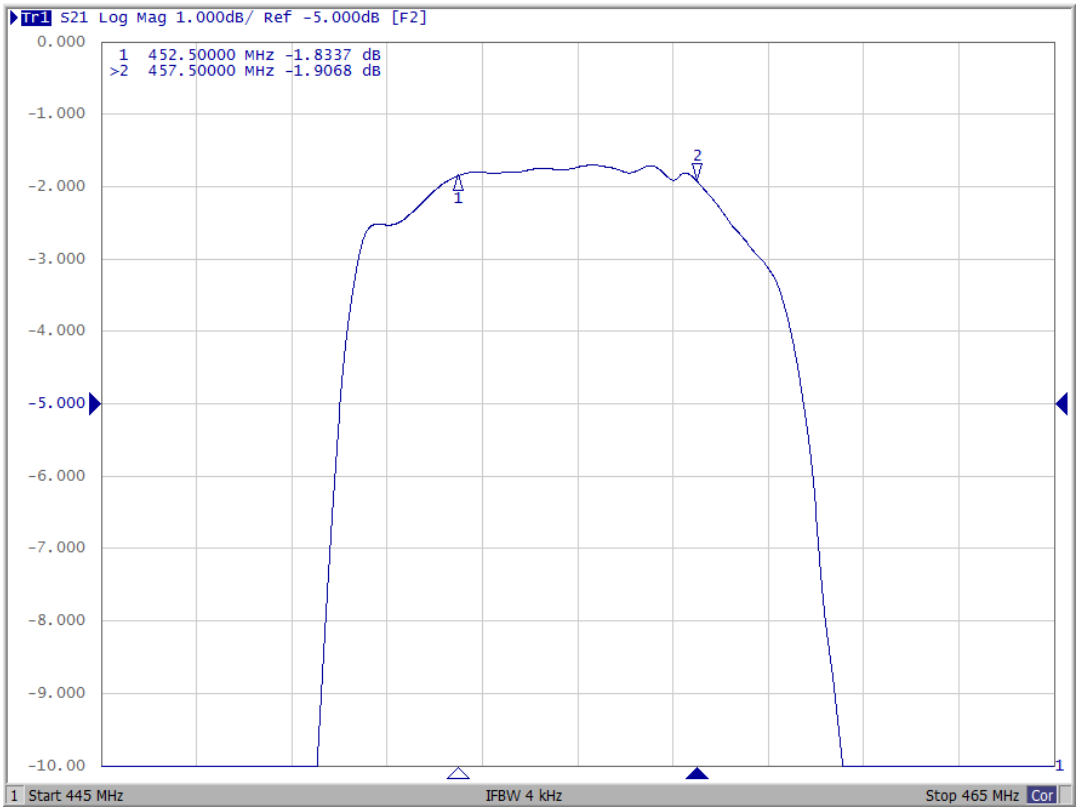

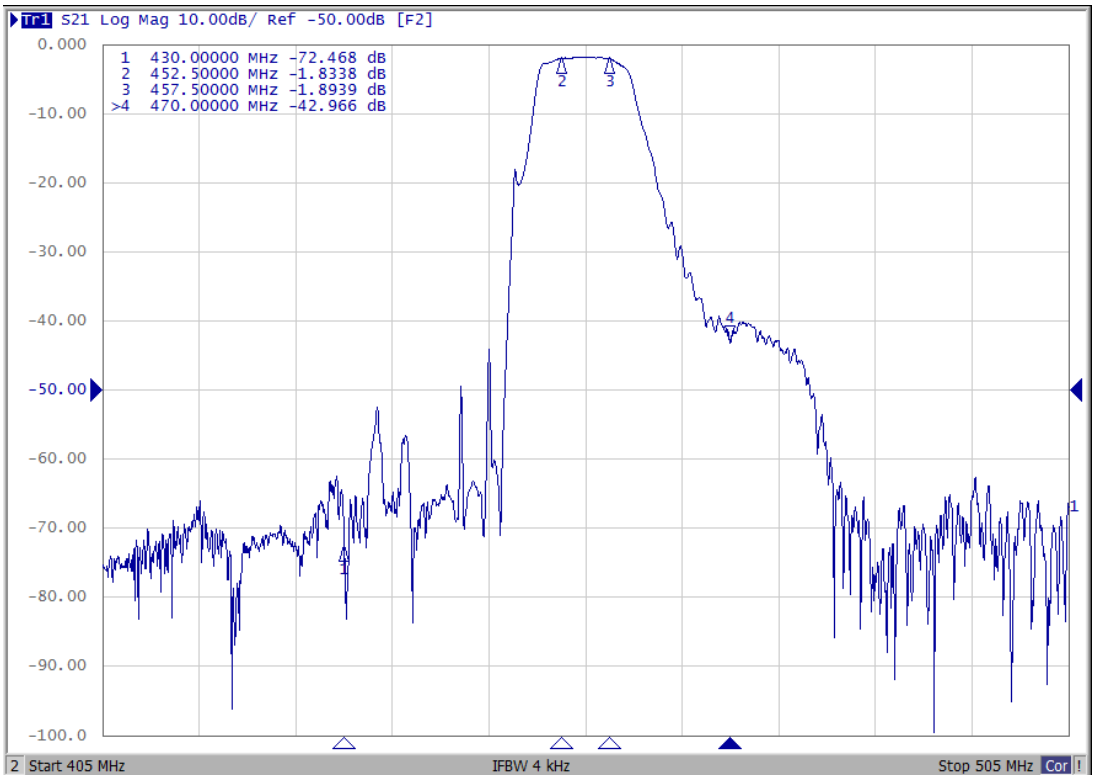

G. PACKING:

1. REEL DIMENSION

(Please refer to FR-75D10 for packing quantity)

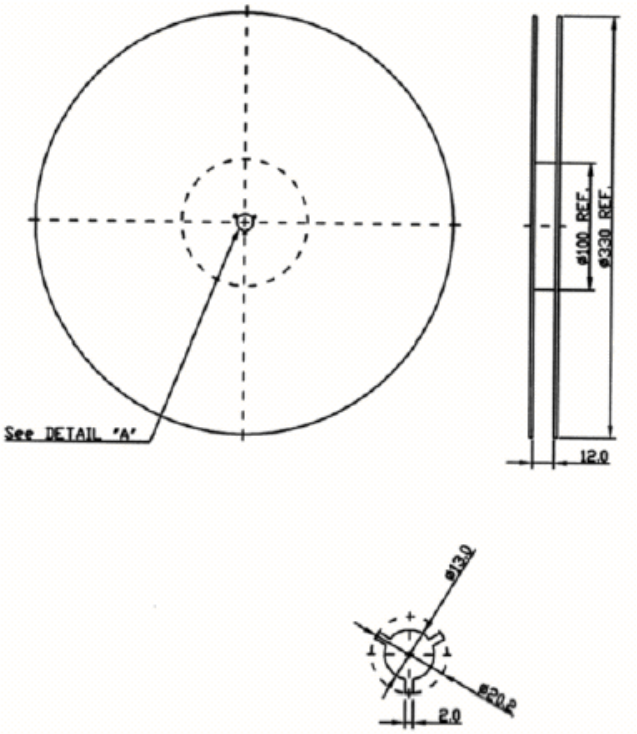

2. TAPE DIMENSION

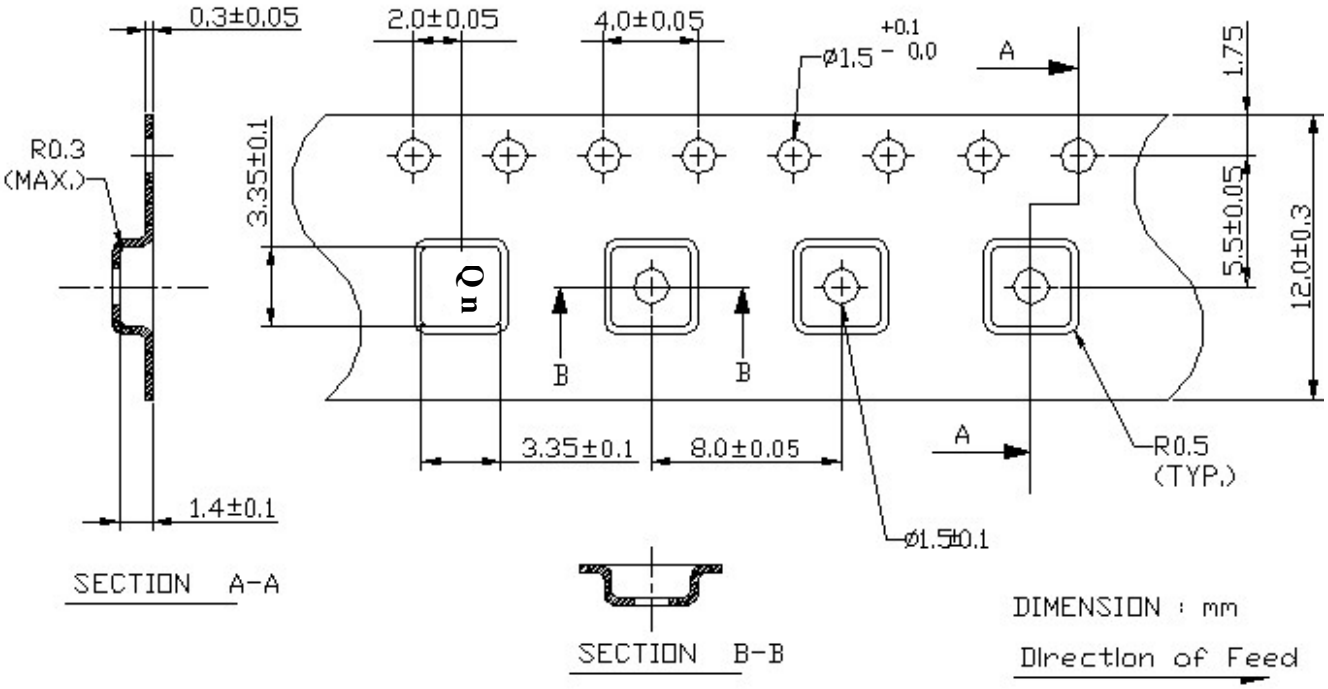

H. RECOMMENDED REFLOW PROFILE:
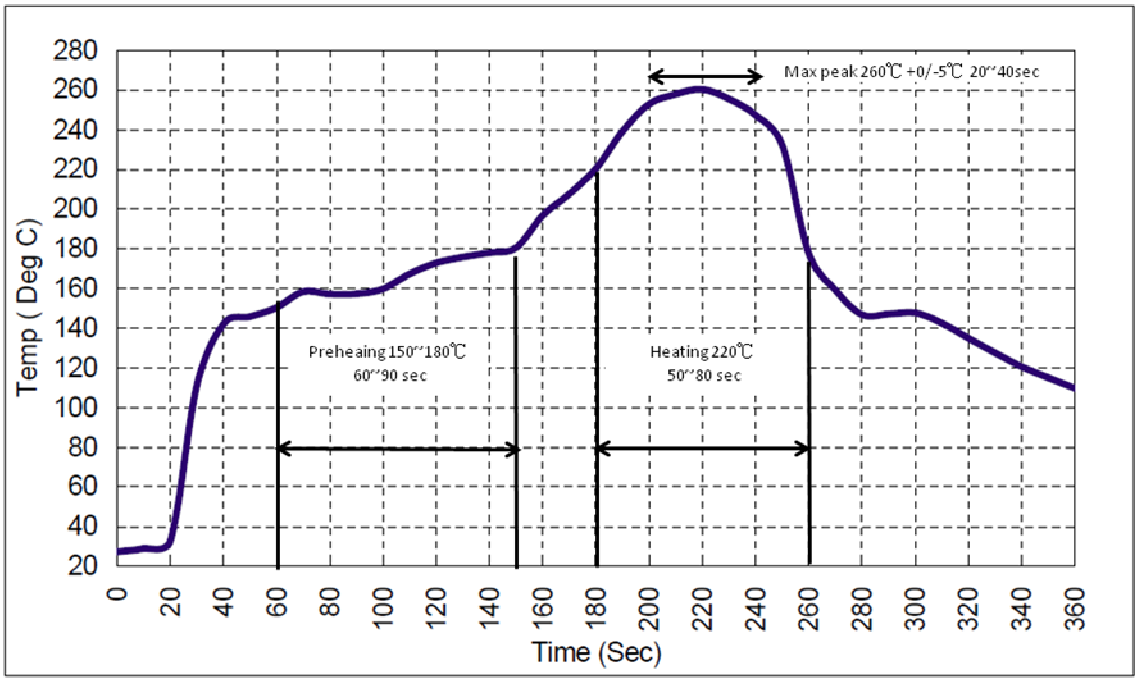
1. Preheating shall be fixed at 150~180℃ for 60~90 seconds.
2. Ascending time to preheating temperature 150℃ shall be 30 seconds min.
3. Heating shall be fixed at 220℃ for 50~80 seconds and at 245~260℃ peak (min. 10sec).
4. Time: 2 times.