T3212 T3224 PRINTER ILLUSTRATED PARTS LIST

THIS IS A CLASS 1 DOCUMENT WHICH IS NONCONFIDENTIAL.

The information contained within this document is the property of TE Connectivity. It is supplied in confidence and the commercial security of the contents must be maintained. It must not be used for any purpose other than that for which it is supplied nor may any information contained in it be disclosed to unauthorised persons. It must not be reproduced in whole or in part without obtaining written permission from TE Connectivity (TE).

While TE has made every reasonable effort to ensure the accuracy of the information in this document, TE does not guarantee that it is error-free, nor does TE make any other representation, warranty or guarantee that the information is accurate, correct, reliable or current. TE reserves the right to make any adjustments to the information contained herein at any time without notice. TE expressly disclaims all implied warranties regarding the information contained herein, including, but not limited to, any implied warranties of merchantability or fitness for a particular purpose. The dimensions in this document are for reference purposes only and are subject to change without notice. Specifications are subject to change without notice. Consult TE for the latest dimensions and design specifications.

*Trademark. TE Connectivity, TE connectivity (logo), and TE (logo) are trademarks. Other logos, product and/or company names may be trademarks of their respective owners.

© 2018 TE Connectivity Ltd. family of companies.
All Rights Reserved.
| Indicates Change

Table of Contents

1. INTRODUCTION 3
1.1. Safety 3
1.2. How to use this document 3
2. T3212-PRINTER & T3224-PRINTER 4
2.1. Associated documents 4

© 2018 TE Connectivity Ltd. family of companies.
All Rights Reserved.
| Indicates Change

1. INTRODUCTION

After extensive testing and research TE Connectivity (TE) have identified from its range of current printers, parts that may be subject to wear[1] or are related to parts that may be subject to wear.

This document is not intended as complete guide to all printer parts.

Knowledge pertaining to current product range is assumed.

1.1. Safety

- Whenever working on (repair or maintenance) always ensure that the printer is switched off and disconnected from its power source.
- Allow a minimum of two minutes to elapse for any stored capacitive energy to discharge.
- When changing any electrostatic devices ensure electrostatic precautions are taken.
- Always follow local safety rules.
- Always use the correct tool for each job

1.2. How to use this document

- Select the correct printer type.
- Identify the part using the Figures associated with your printer.
- Make a note of the location number
- Use corresponding part number and description to order from TE

[1] All wear parts and related to parts are identified in Table 2 to 6

© 2018 TE Connectivity Ltd. family of companies.
All Rights Reserved.
| Indicates Change

2. T3212-PRINTER & T3224-PRINTER

2.1. Associated documents

TE document number	TE document title
TTDS-272	T3212-PRINTER
TTDS-274	T3224-PRINTER
411-121005	IDENTIFICATION PRINTER PRODUCT RIBBON MATRIX
411-121037	THERMAL TRANSFER PRINTHEAD CLEANING INSTRUCTIONS
TTDS-260	TT PRINTER ACCESSORIES
412-121035	T3212/T3224 Operator's Manual

Table 1 - Associated Documents

Figure 1 – T3212-PRINTER (1-2186500-1)

Figure 2 – T3224-PRINTER (1-2186502-1)

© 2018 TE Connectivity Ltd. family of companies.
All Rights Reserved.
| Indicates Change

T3212/T3224 PRINTER PARTS LIST

Part Number	Description	Location number
1-2186511-1	T3212- PRINTER-COVER	**15**
1-2186512-1	T3224- PRINTER-COVER	**15**

Table 2 – T3212/T3224-PRINTER Part Number

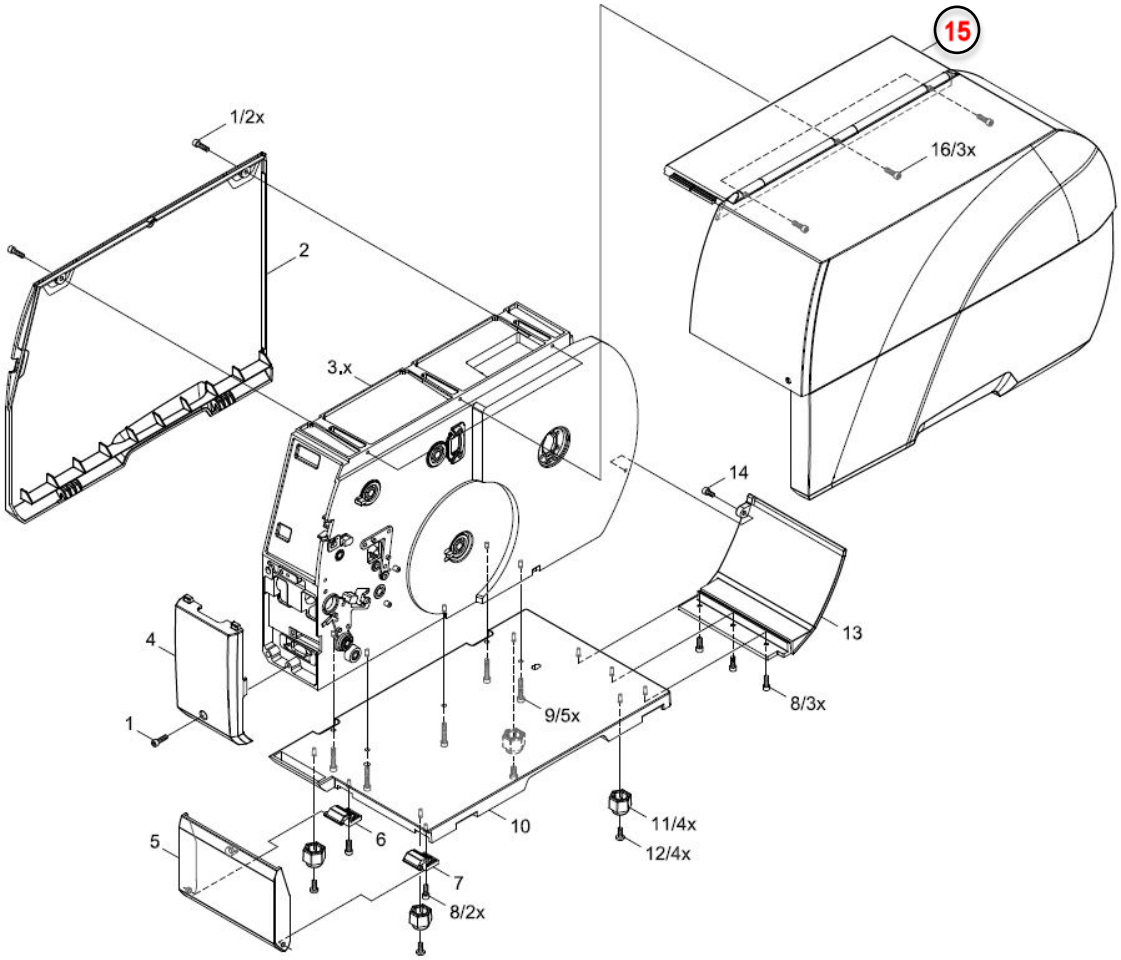

Figure 3 – T3212/T3224-PRINTER (cover)

© 2018 TE Connectivity Ltd. family of companies.
All Rights Reserved.
| Indicates Change

REV 2

Part Number	Description	Location number
1-2186507-1	T3200-PRINTER-LOGICBOARD	**21**
1-2186508-1	T3200-PRINTER-PSU	**22**
1-2186513-1	T3200-PRINTER-CONTROL-PANEL	**26.x**

Table 3 – T3212/T3224-PRINTER Part Number

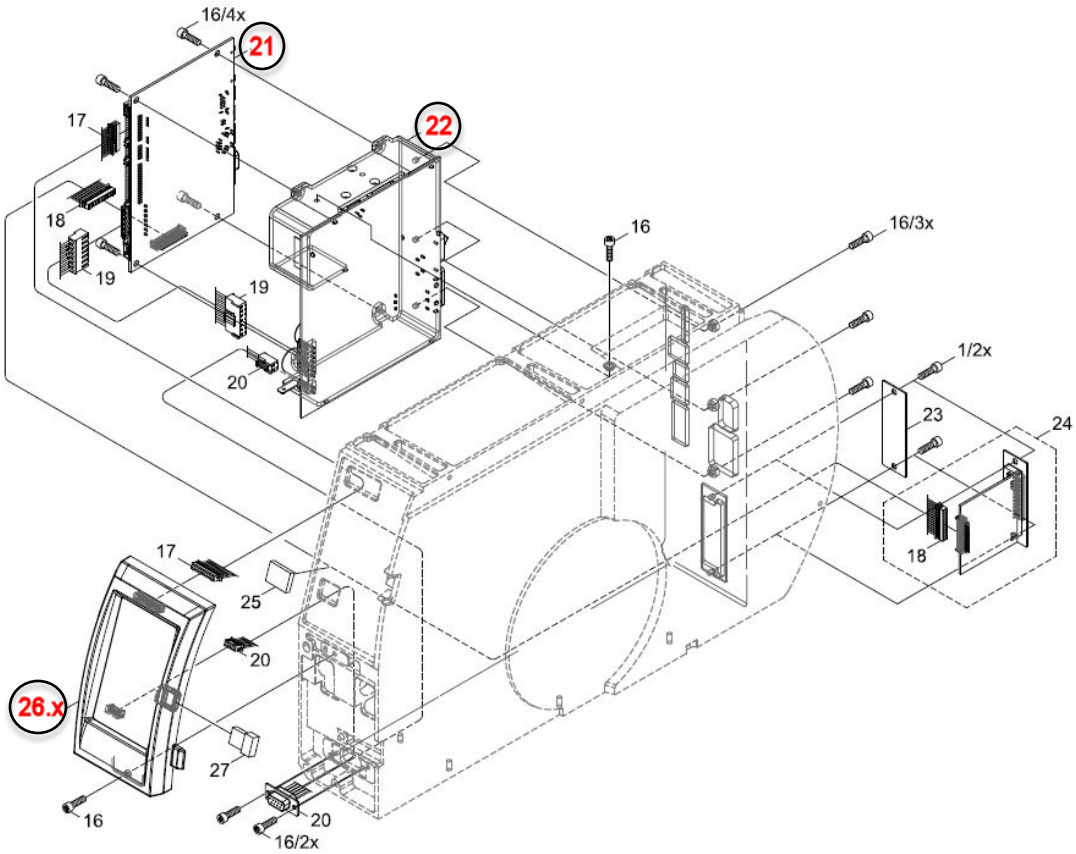

Figure 4 – T3212/T3224-PRINTER (electronics)

© 2018 TE Connectivity Ltd. family of companies.
All Rights Reserved.
| Indicates Change

REV 2

Part Number	Description	Location number
1-2186518-1	T3200-PRINTER-PRINTHEAD-LEVER	**48**
1-2186504-1	T3212-PRINTER-PRINTHEAD-300DPI	**40.x**
1-2186506-1	T3224-PRINTER-PRINTHEAD-600DPI	**40.x**

Table 4 – T3212/T3224-PRINTER Part Number

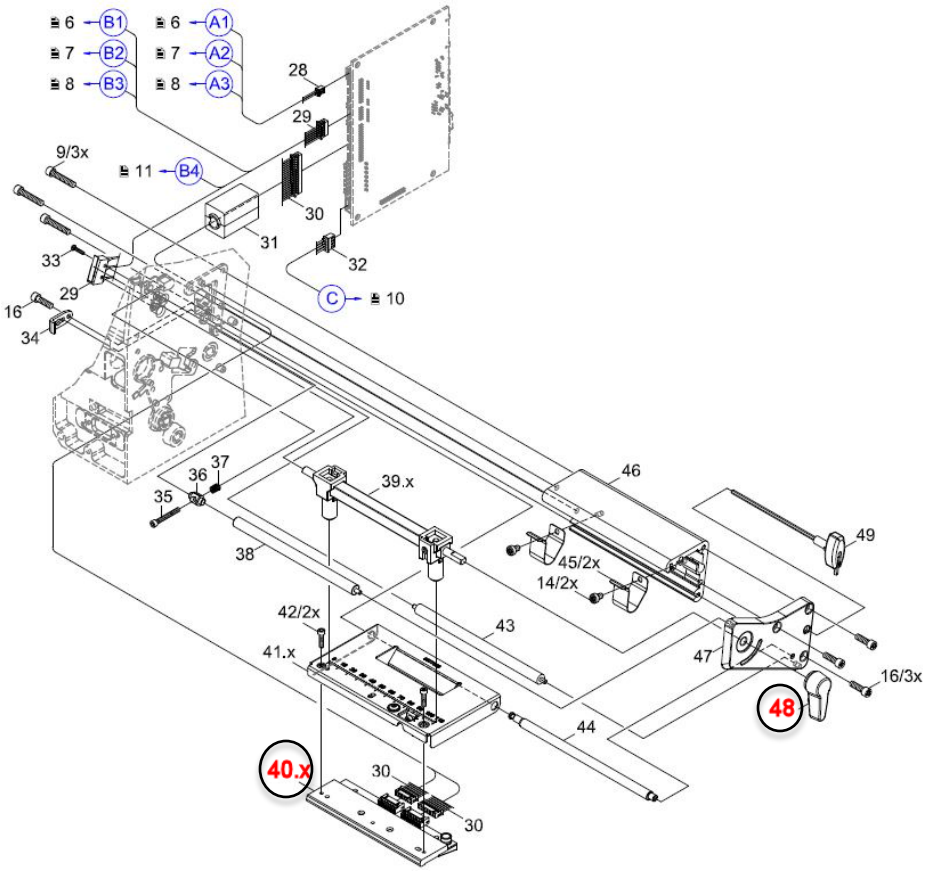

Figure 5 – T3212/T3224-PRINTER (print head/mechanical)

© 2018 TE Connectivity Ltd. family of companies.
All Rights Reserved.
| Indicates Change

REV 2

Part Number	Description	Location number
1-2186505-1	T3200-PRINTER-DRIVE-ROLLER	**52**
1-2186515-1	T3200-PRINTER-LABEL-SENSOR	**63**

Table 5 – T3212/T3224-PRINTER Part Number

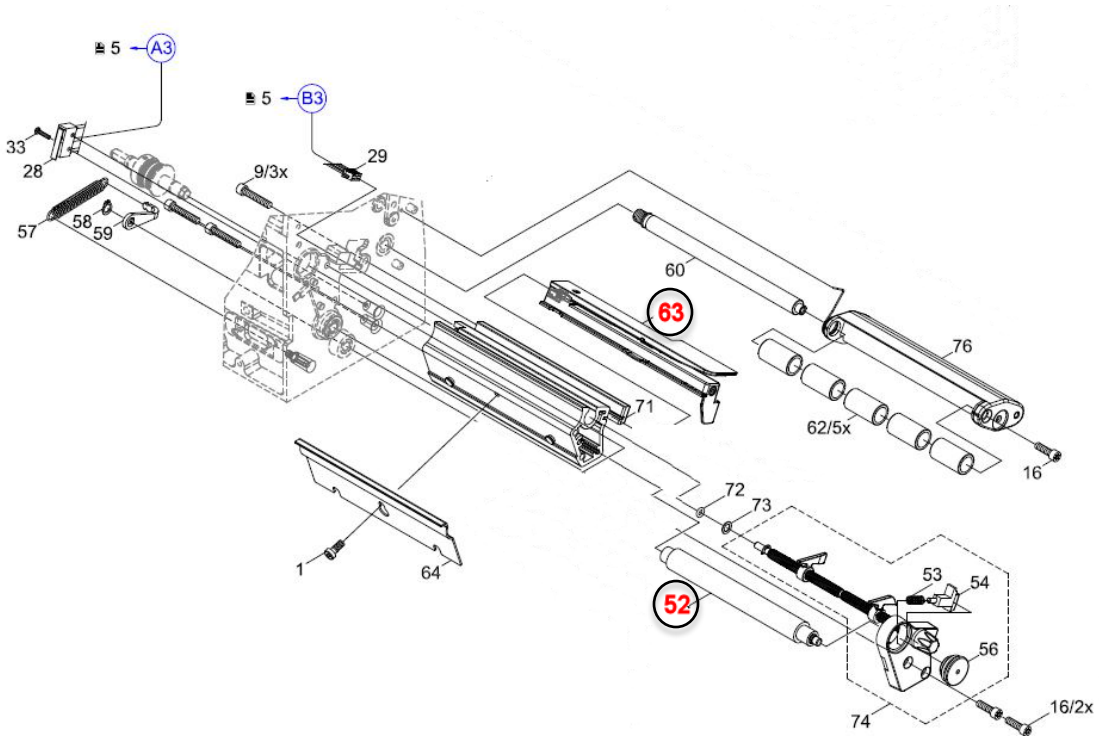

Figure 6 – T3212/T3224-PRINTER (drive rollers/Sensor)

© 2018 TE Connectivity Ltd. family of companies.
All Rights Reserved.
| Indicates Change

Part Number	Description	Location number
1-2186519-1	T3200-PRINTER-MEDIA-OUTER-FLANGE	**101**

Table 6 – T3212/T3224-PRINTER Part Number

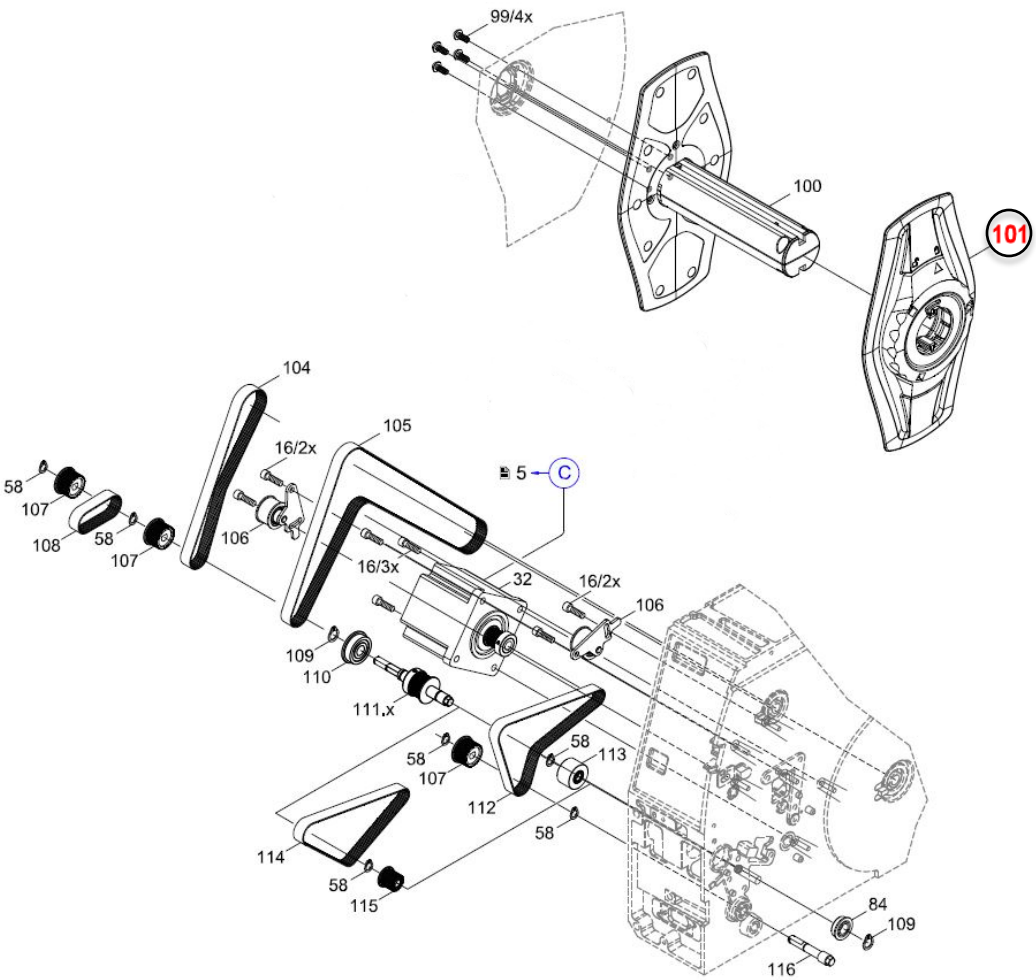

Figure 7 – T3212/T3224-PRINTER

© 2018 TE Connectivity Ltd. family of companies.
All Rights Reserved.
| Indicates Change

REV 2

T3300 Perforator/Cutter

Part Number	Description	Location number
1-2186514-1	T3200-PRINTER-CUTTER-COVER	**2**

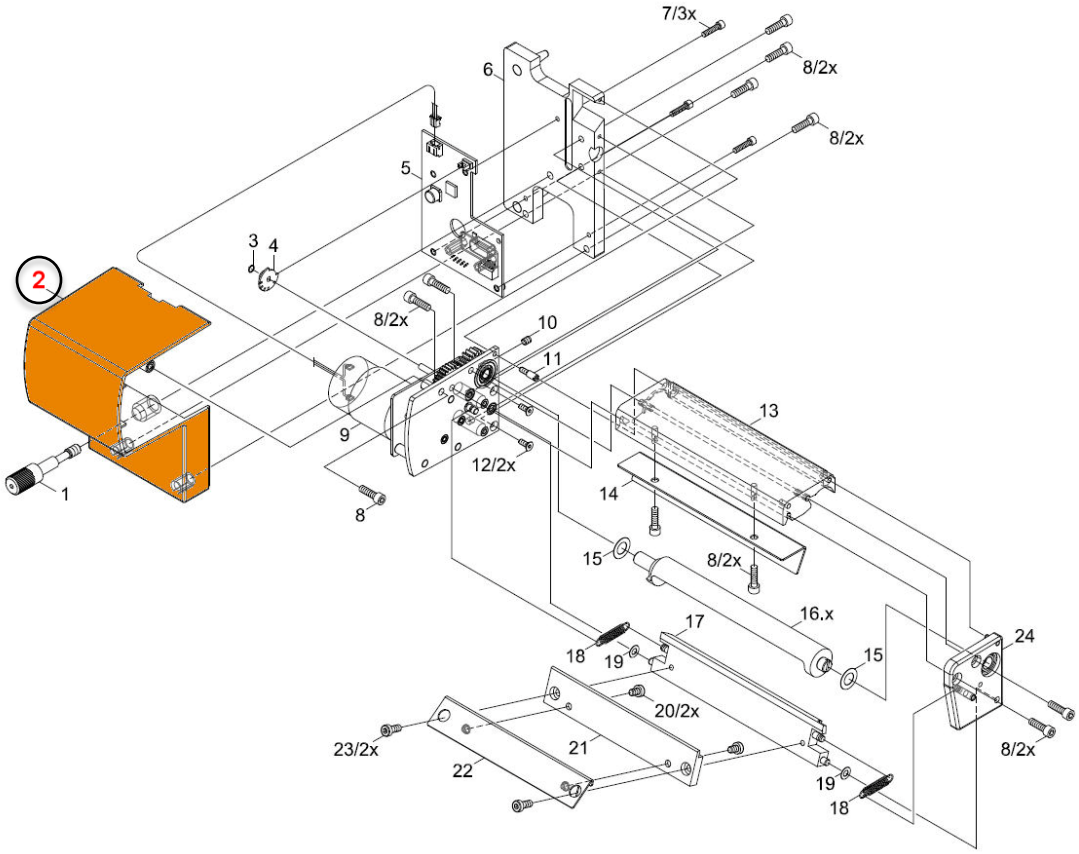

Figure 8 – T3212/T3224-PRINTER-CUTTER/PERFORTOR

© 2018 TE Connectivity Ltd. family of companies.
All Rights Reserved.
| Indicates Change

REV 2