# 7-1768041-8 ✔ ACTIVE

Agastat 7000

TE Internal #: 7-1768041-8

Snap-On, STD 02 Marker Size, Yellow, Straight Cut, E Marking Details, Black, Polyoxymethylene, Agastat 7000, Pre-Printed Markers

View on TE.com >

Identification & Labeling > Pre-Printed Markers > STD Snap-On Markers



Marker Style: **Snap-On**

Marker Size: **STD 02**

Compatible Cable Diameter Range: **1.4 – 1.8 mm [ .055 – .071 in ]**

Primary Product Color: **Yellow**

Marker Cut: **Straight**

All STD Snap-On Markers (958)

## Features

### Body Features

| | |
|---|---|
| Marker Style | Snap-On |
| Marker Size | STD 02 |
| Primary Product Color | Yellow |
| Primary Product Material | Polyoxymethylene |

### Dimensions

| | |
|---|---|
| Compatible Cable Diameter Range | 1.4 – 1.8 mm[.055 – .071 in] |

### Printer/Label Features

| | |
|---|---|
| Marker Cut | Straight |
| Marking Details | E |

### Packaging Features

| | |
|---|---|
| Packaging Quantity | 300 |
| Packaging Method | Strip |

### Other

| | |
|---|---|
| Printed Marking Color | Black |

## Product Compliance

For compliance documentation, visit the product page on TE.com>

| | |
|---|---|
| EU RoHS Directive 2011/65/EU | Compliant |
| EU ELV Directive 2000/53/EC | Compliant |
| China RoHS 2 Directive MIIT Order No 32, 2016 | No Restricted Materials Above Threshold |
| EU REACH Regulation (EC) No. 1907/2006 | Current ECHA Candidate List: JUNE 2024 (241)<br>Candidate List Declared Against: JUNE 2024 (241)<br>Does not contain REACH SVHC |
| Halogen Content | Low Halogen - Br, Cl, F, I < 900 ppm per homogenous material. Also BFR/CFR/PVC Free |
| Solder Process Capability | Not applicable for solder process capability |

Product Compliance Disclaimer

This information is provided based on reasonable inquiry of our suppliers and represents our current actual knowledge based on the information they provided. This information is subject to change. The part numbers that TE has identified as EU RoHS compliant have a maximum concentration of 0.1% by weight in homogenous materials for lead, hexavalent chromium, mercury, PBB, PBDE, DBP, BBP, DEHP, DIBP, and 0.01% for cadmium, or qualify for an exemption to these limits as defined in the Annexes of Directive 2011/65/EU (RoHS2). Finished electrical and electronic equipment products will be CE marked as required by Directive 2011/65/EU. Components may not be CE marked. Additionally, the part numbers that TE has identified as EU ELV compliant have a maximum concentration of 0.1% by weight in homogenous materials for lead, hexavalent chromium, and mercury, and 0.01% for cadmium, or qualify for an exemption to these limits as defined in the Annexes of Directive 2000/53/EC (ELV). Regarding the REACH Regulation, the information TE provides on SVHC in articles for this part number is based on the latest European Chemicals Agency (ECHA) 'Guidance on requirements for substances in articles' posted at this URL: https://echa.europa.eu/guidance-documents/guidance-on-reach

## Compatible Parts



TE Part # 003324-000
STD02W-B

## Also in the Series | Agastat 7000



Electromechanical Relays(73)



Pre-Printed Markers(957)

## Customers Also Bought



TE Part #6609047-4
15VT6=F7336 S0

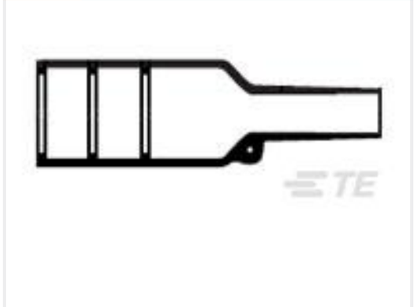

TE Part #979127-000
202K163-100-01/86-0

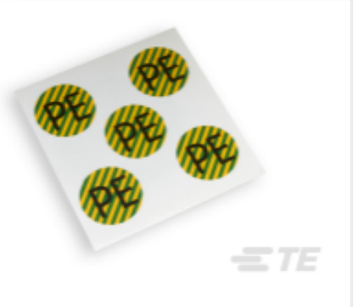

TE Part #8-1768034-1
LKZ Vinyl Electric Symbol Labels



TE Part #1-1768048-3
STD Snap-On Markers



TE Part #1393824-4
V23154Z1005

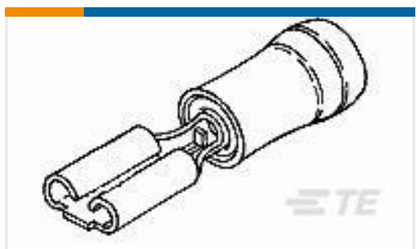

TE Part #165616-5
110 PIDG FASTON REC

## Documents

### Product Drawings

STD02Y-E

English

### Datasheets & Catalog Pages

STD/STB-type Snap-on Pre-printed Wire & Cable Markers

English

IDENTIFICATION SELECTION GUIDE

English

STD and STB Technical Datasheet

English

### Product Specifications

RW-2538 STD and STB work instruction

English