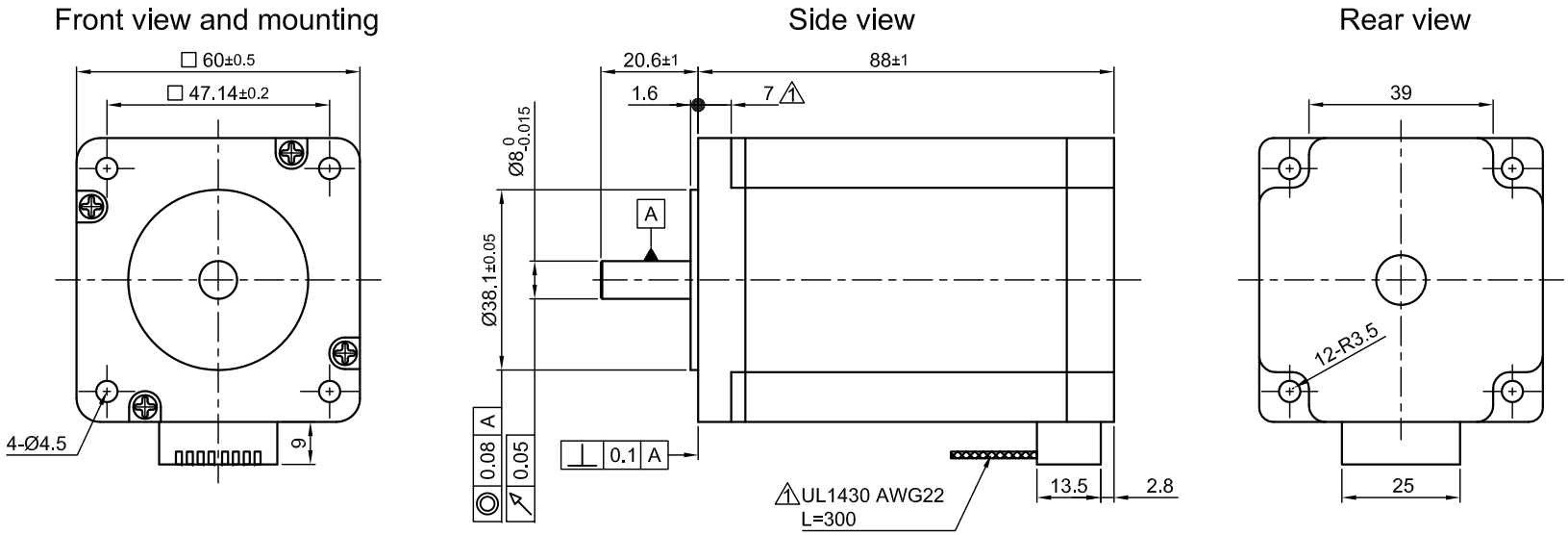

SPECIFICATION \ CONNECTION	UNIPOLAR OR BIPOLAR-1 WINDING	BIPOLAR SERIAL	BIPOLAR PARALLEL
VOLTAGE (VDC)	3.9		
AMPS/PHASE	3.0	2.12	4.24
RESISTANCE/PHASE (Ohms)@25°C	1.3±15%	2.6±15%	0.65±15%
INDUCTANCE/PHASE (mH) @1KHz	3.2±20%	12.8±20%	3.2±20%
HOLDING TORQUE (Nm) [lb-in]	2.5 [22.13]	3.54 [31.29]	3.54 [31.29]
DETENT TORQUE (Nm) [lb-in]	0.075 [0.664]		
STEP ANGLE (°) ± ACCURACY	1.8±5% (NON-ACCUM)		
BACK-EMF (V) (300 U/min)	35.5		
ROTOR INERTIA (Kg-m^2) [lb-in^2]	8.4x10^{-5} [0.287]		
WEIGHT (Kg) [lb]	1.45 [3.197] ⚠2		

TEMPERATURE RISE: MAX.80°C (MOTOR STANDSTILL; FOR 2 PHASE ENERGIZED)

AMBIENT TEMPERATURE -10°~ 50°C [14°F ~ 122°F]

INSULATION RESISTANCE 100 MOhm (UNDER NORMAL TEMPERATURE AND HUMIDITY)

INSULATION CLASS B 130° [266°F]

DIELECTRIC STRENGTH 500VAC FOR 1 MIN. (BETWEEN THE MOTOR COILS AND THE MOTOR CASE)

AMBIENT HUMIDITY MAX. 85% (NO CONDENSATION)

PERMISSIBLE RADIAL+AXIAL FORCE

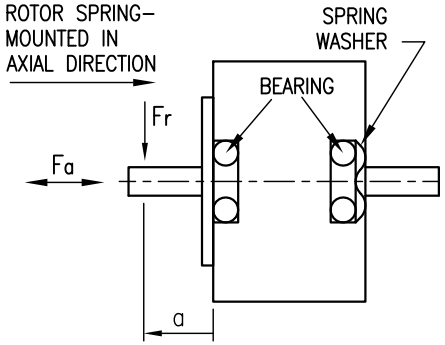

AXIAL-FORCE Fa (N)	Fa=14			
DISTANCE a (mm)	5	10	15	20
RADIAL-FORCE Fr (N)	163	112	85	63

	AXIAL	RADIAL
SHAFT PLAY (mm)	0.075	0.025
AT LOAD MAX: (N)	10	5.0

TYPE OF CONNECTION (EXTERN)				MOTOR	
UNIPOLAR	BIPOLAR 1WINDING	BIPOLAR SERIAL	BIPOLAR PARALLEL	LEADS	WINDING
A	A	A	A	BLU/WHT	A
COM				BLU	
A\		A\	A\	RED/WHT	A\
B	B	B	B	RED	
COM				GRN/WHT	B
B\		B\	B\	GRN	
				BLK/WHT	B\
				BLK	

FULL STEP 2 PHASE-Ex.,
WHEN FACING MOUNTING END (X)

STEP	A	B	A\	B\		CCW
1	+	+	−	−	↓	↑
2	−	+	+	−		
3	−	−	+	+		
4	+	−	−	+	CW	

WIRING DIAGRAM

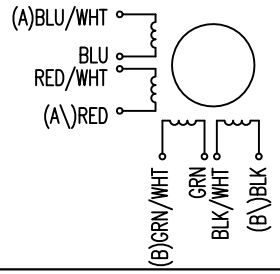

REV	DESCRIPTION	DATE	APVD
2	CHANGE WEIGHT	02.06.14	J.D.
1	LENGTH+UL NO.	04.08.09	J.W.

Nanotec® PLUG & DRIVE

ST6018L3008-A

SCALE FREE	
X	±0.5
1PL	±0.2
2PL	±0.1
ANGLE	±30'

	SIGNATURE	DATE
APVD	S.Ha.	16.01.07
CHKD		
DRN	J.W.	13.07.06

STEPPING MOTOR

DWG.NO ST6018L3008-A