SPC TECHNOLOGY

ALL RIGHTS RESERVED. NO PORTION OF THIS PUBLICATION, WHETHER IN WHOLE OR IN PART CAN BE REPRODUCED WITHOUT THE EXPRESS WRITTEN CONSENT OF SPC TECHNOLOGY.

SPC-F005.DWG

REVISIONS

DOC. NO. SPC-F005 * Effective: 7/8/02 * DCP No: 1398

DCP #	REV	DESCRIPTION	DRAWN	DATE	CHECKD	DATE	APPRVD	DATE
1876	A	RELEASED	EO	07/25/06	SA	07/25/06	HO	07/25/06

RoHS Compliant

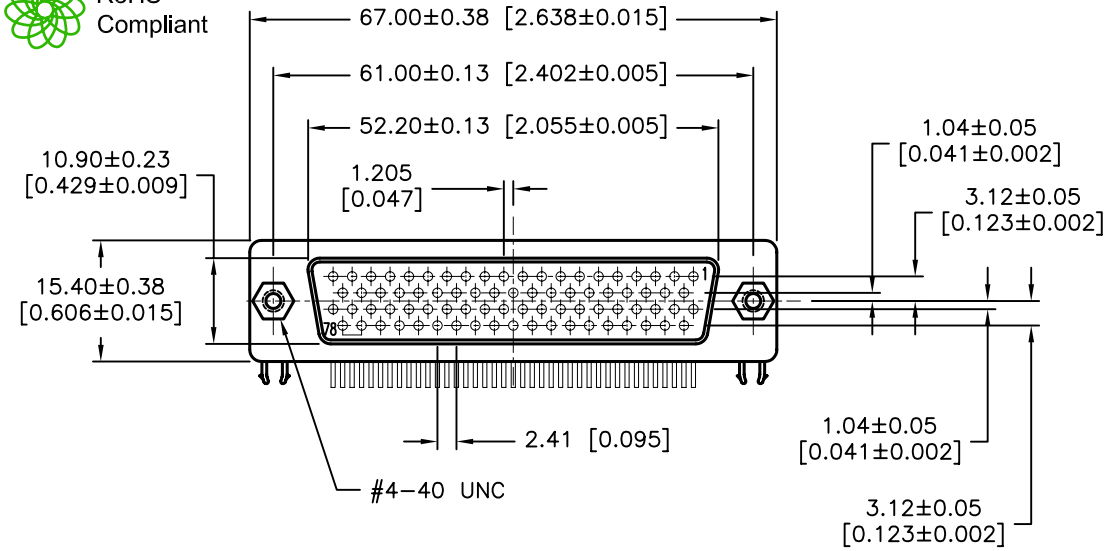

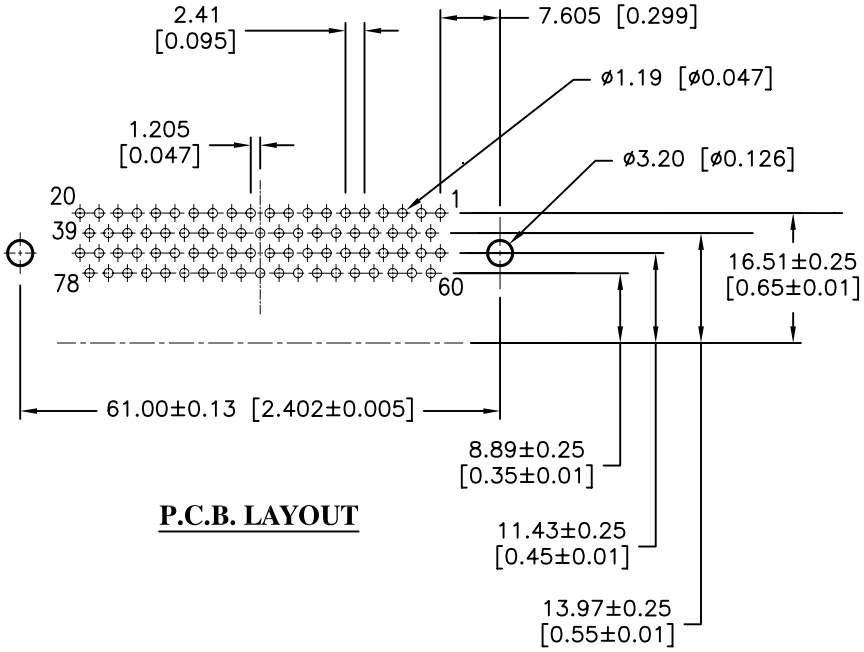

P.C.B. LAYOUT

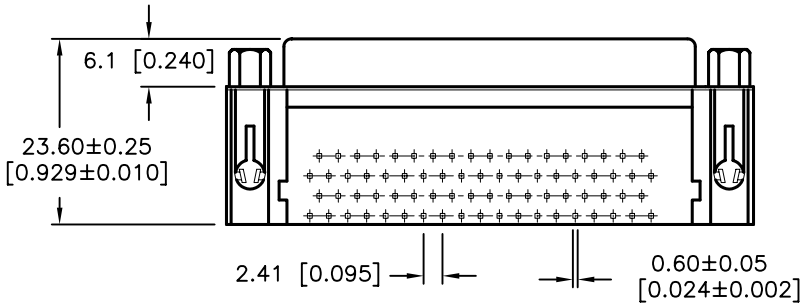

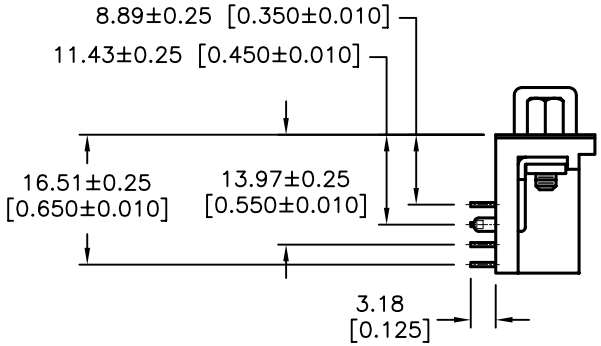

SPECIFICATIONS:

1. Shell: Steel, Nickel-Plated over Copper
2. Insulator: PBT+30% Fiber-Glass, Black Color
3. Contact: Copper Alloy, Gold-Plated on Contact Area Tin-Plated on Dip Solder Tail
4. Rivet: Metal, Nickel-Plated
5. Board-Lock: Brass, Tin-Plated
6. Jack-Screw: Brass, Nickel-Plated
7. Current Rating: 2 Amps
8. Insulator Resistance: 5000 Megohms min. at 500 VDC
9. Dielectric Withstanding Voltage: 1000 VAC Min. for One Minute
10. Contact Resistance: 20 miliohms Max.
11. Working Temperature: -55°C to +105°C

DISCLAIMER:
ALL STATEMENTS AND TECHNICAL INFORMATION CONTAINED HEREIN ARE BASED UPON INFORMATION AND/OR TESTS WE BELIEVE TO BE ACCURATE AND RELIABLE. SINCE CONDITIONS OF USE ARE BEYOND OUR CONTROL, THE USER SHALL DETERMINE THE SUITABILITY OF THE PRODUCT FOR THE INTENDED USE AND ASSUME ALL RISK AND LIABILITY WHATSOEVER IN CONNECTION THEREWITH.

TOLERANCES:
Unless Otherwise Specified
.X ±0.35 [0.014]
.XX ±0.15 [0.006]
.XX ±0.10 [0.004]

DRAWN BY:	DATE:
EKLAS ODISH	07/25/06
CHECKED BY:	DATE:
SAMI ALNADI	07/25/06
APPROVED BY:	DATE:
HISHAM ODISH	07/25/06

DRAWING TITLE: 78 Pin High-Density D-Sub R/A PCB Socket

SIZE	DWG. NO.	ELECTRONIC FILE	REV
A	SPC15436	79K5016.DWG	A

SCALE: NTS | U.O.M.: mm [INCHES] | SHEET: 1 OF 1