REV.	ECN NO.	DATE	SIGN	DESCRIPTION
A		2022-03-18	Allen Pan	Rev.02 To Rev.A
B	C220586	2022-04-11	Allen Pan	B x2

B SLKC-XXEEFP-GCP-001

XX:No. Of Pin

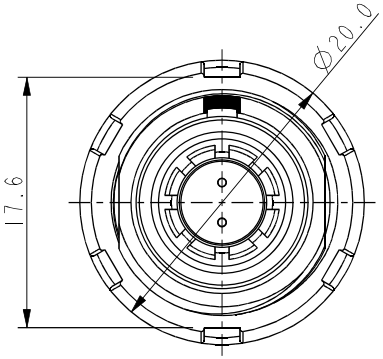

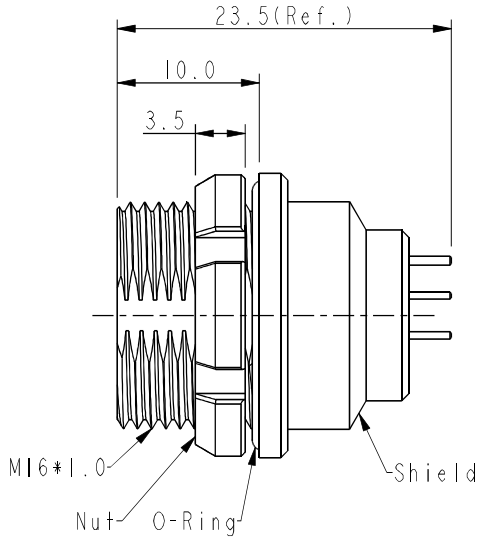

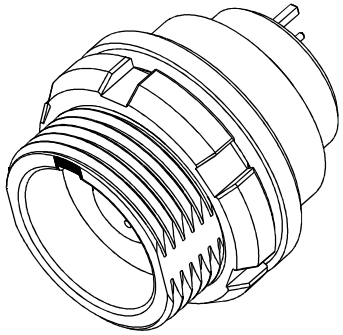

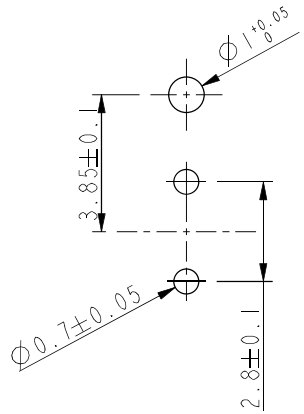

PCB Layout

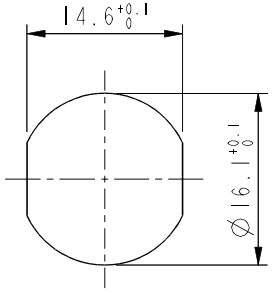

Recommended Panel Cut-out

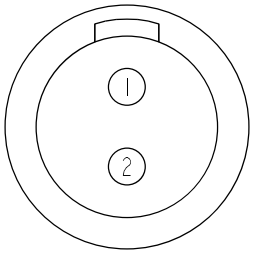

Pin Assignment Front View

Note:
* RoHS Compliant
* QC Important Dimension
* Waterproof Rate: IPX8, Unmated 1m/24h
* Connector
  Housing: Thermoplastic, Black
  Pin: Copper Alloy, Gold Plated
  O-Ring: Rubber, Dark Gray
* Shield: Metal
* Nut: Metal
* O-Ring: Rubber, Red
* For Panel Thickness Max 5.0mm
* O-Ring and nut are assembled on connectors

UNIT:mm

TOLERANCE
.X ±0.25
.XX ±0.1
.XXX ±0.05
ANGLES ±1°

TITLE: FLOS PLUS C SIZE SPE PANEL 2PIN			
SCALE 2:1	SIZE A4	SHEET 1 OF 1	
REV. B	WC-REV. A.1	QC: Inspection item	

Amphenol LTW B
安費諾亮泰企業股份有限公司

ITEM NO	DRAWN BY Allen Pan	DATE 2022-03-18
DWG NO SLKC-XXEEFP-GCP-001	CHECKED BY Sam Ho	DATE 2022-03-18
CUSTOMER ALTW	APPROVED BY Fred Lee	DATE 2022-03-18

W10814-03-[illegible]01A2

THIS DOCUMENT IS SUBJECT TO CHANGE WITHOUT NOTICE. IT IS CONFIDENTIAL AND A PROPERTY OF Amphenol LTW. DISCLOSURE TO THIRD PARTY HAS TO BE AUTHORIZED BY Amphenol LTW.