

Features

- Available in E12 series
- Low profile of only 3.2 mm
- Low inductance values
- RoHS compliant*

Applications

- Input/output of DC/DC converters
- Power supplies for:
  - Portable communications equipment
  - Camcorders
  - LCD TVs

SDR0403 Series - SMD Power Inductors

Electrical Specifications

Bourns Part No.	Inductance 1kHz		Q Ref.	Test Frequency (MHz)	SRF Min. (MHz)	RDC Max. (Ω)	I rms Max. (A)	I sat Typ. (A)
	(µH)	Tol. %						
SDR0403-1R0ML	1.0	± 20	28	7.96	150	0.033	3.80	5.50
SDR0403-1R4ML	1.4	± 20	28	7.96	110	0.038	3.30	5.10
SDR0403-1R8ML	1.8	± 20	28	7.96	90	0.042	2.91	4.40
SDR0403-2R2ML	2.2	± 20	28	7.96	80	0.047	2.60	3.90
SDR0403-2R7ML	2.7	± 20	28	7.96	75	0.052	2.43	3.50
SDR0403-3R3ML	3.3	± 20	28	7.96	65	0.058	2.15	3.00
SDR0403-3R9ML	3.9	± 20	28	7.96	55	0.076	1.98	2.70
SDR0403-4R7ML	4.7	± 20	28	7.96	50	0.094	1.70	2.60
SDR0403-5R6ML	5.6	± 20	28	7.96	45	0.10	1.60	2.40
SDR0403-6R8ML	6.8	± 20	28	7.96	40	0.12	1.41	2.10
SDR0403-8R2ML	8.2	± 20	28	7.96	36	0.13	1.26	1.90
SDR0403-100ML	10	± 20	28	2.52	33	0.18	1.15	1.70
SDR0403-120ML	12	± 20	28	2.52	30	0.21	1.05	1.60
SDR0403-150ML	15	± 20	28	2.52	28	0.24	0.92	1.40
SDR0403-180ML	18	± 20	25	2.52	23	0.34	0.84	1.30
SDR0403-220ML	22	± 20	25	2.52	20	0.38	0.76	1.20
SDR0403-270KL	27	± 10	23	2.52	17	0.52	0.71	1.00
SDR0403-330KL	33	± 10	23	2.52	15	0.54	0.64	0.99
SDR0403-390KL	39	± 10	20	2.52	14	0.59	0.59	0.92
SDR0403-470KL	47	± 10	20	2.52	13	0.84	0.54	0.78
SDR0403-560KL	56	± 10	20	2.52	12	0.94	0.50	0.74
SDR0403-680KL	68	± 10	20	2.52	11	1.12	0.46	0.68
SDR0403-820KL	82	± 10	25	2.52	10	1.27	0.42	0.58
SDR0403-101KL	100	± 10	35	0.796	9	1.90	0.35	0.51
SDR0403-121KL	120	± 10	50	0.796	8	2.20	0.32	0.44
SDR0403-151KL	150	± 10	50	0.796	8	3.40	0.26	0.40
SDR0403-181KL	180	± 10	50	0.796	5	3.90	0.24	0.39
SDR0403-221KL	220	± 10	50	0.796	4	4.40	0.22	0.33
SDR0403-271KL	270	± 10	45	0.796	3	5.00	0.20	0.30
SDR0403-331KL	330	± 10	40	0.796	4	6.00	0.17	0.25
SDR0403-391KL	390	± 10	40	0.796	3.5	6.40	0.15	0.22
SDR0403-471KL	470	± 10	50	0.796	3	7.00	0.13	0.19
SDR0403-561KL	560	± 10	50	0.796	2.8	7.80	0.12	0.18
SDR0403-681KL	680	± 10	40	0.796	2.8	8.60	0.11	0.16
SDR0403-821KL	820	± 10	38	0.796	2.5	12.00	0.10	0.15
SDR0403-102KL	1000	± 10	38	0.252	2	14.00	0.09	0.13

General Specifications

Test Voltage ..... 1 V
Operating Temperature ...-40 °C to +125 °C
(Temperature rise included)
Storage Temperature... -55 °C to +125 °C
Moisture Sensitivity Level 1
ESD Classification (HBM) ..... N/A

Materials

Core ..... Ferrite DR
Wire ..... Enameled copper
Terminal ..... Ag/Ni/Sn
Rated Current .. Ind. drop 10 % typ. at Isat
Temp. Rise ..... 40 °C max. at rated Irms
Packaging ..... 2000 pcs. per reel

Product Dimensions

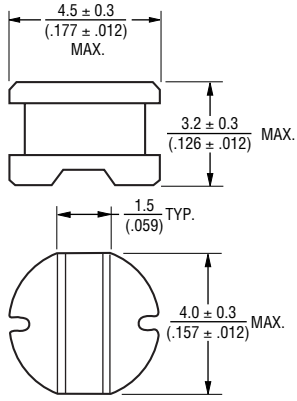

Recommended Layout

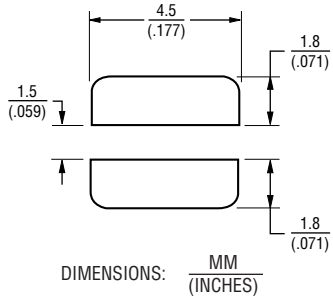

DIMENSIONS: MM (INCHES)

Typical Part Marking

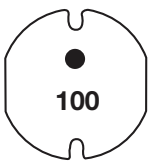

Electrical Schematic



*RoHS Directive 2002/95/EC Jan. 27, 2003 including annex and RoHS Recast 2011/65/EU June 8, 2011.

Specifications are subject to change without notice.
The device characteristics and parameters in this data sheet can and do vary in different applications and actual device performance may vary over time.
Users should verify actual device performance in their specific applications.

Packaging Specifications

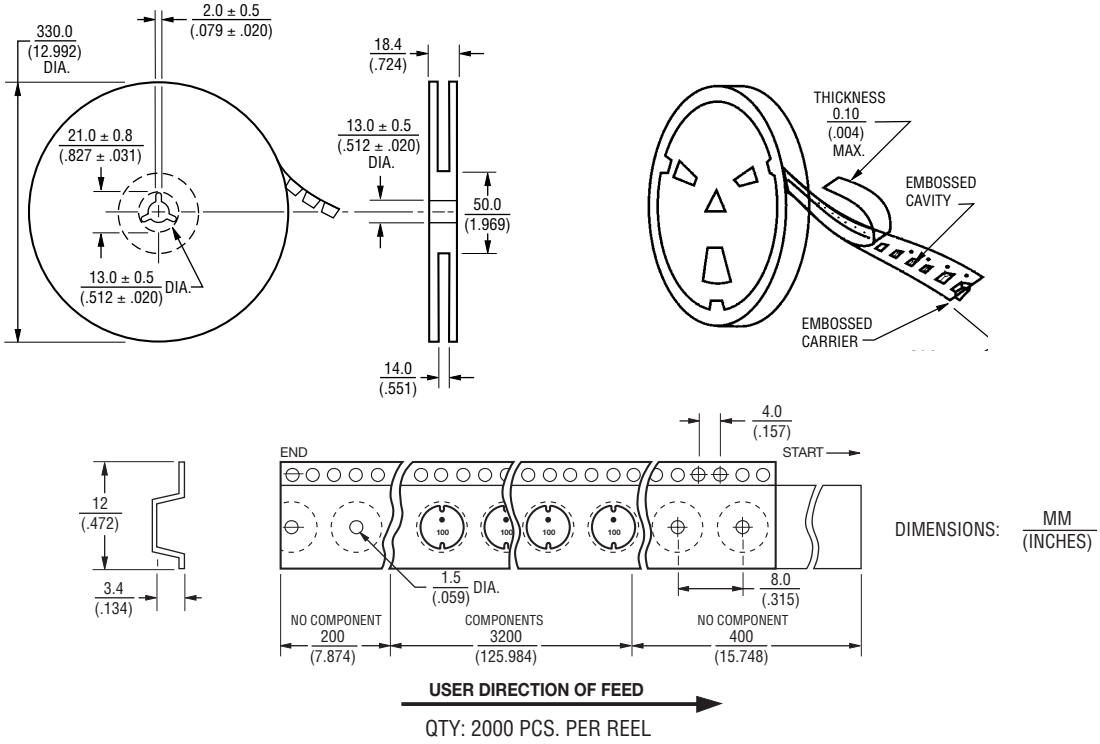

REV. 02/18

Specifications are subject to change without notice.
The device characteristics and parameters in this data sheet can and do vary in different applications and actual device performance may vary over time.
Users should verify actual device performance in their specific applications.

Mouser Electronics

Authorized Distributor

Click to View Pricing, Inventory, Delivery & Lifecycle Information:

Bourns:

SDR0403-102KL SDR0403-331KL SDR0403-391KL SDR0403-471KL SDR0403-561KL SDR0403-681KL SDR0403-821KL SDR0403-3R9ML SDR0403-680KL SDR0403-1R4ML SDR0403-221KL SDR0403-470KL SDR0403-220ML SDR0403-560KL SDR0403-101KL SDR0403-3R3ML SDR0403-100ML SDR0403-1R0ML SDR0403-181KL SDR0403-390KL SDR0403-2R2ML SDR0403-271KL SDR0403-6R8ML SDR0403-330KL SDR0403-820KL SDR0403-8R2ML SDR0403-2R7ML SDR0403-150ML SDR0403-121KL SDR0403-270KL SDR0403-180ML SDR0403-151KL SDR0403-4R7ML SDR0403-120ML SDR0403-1R8ML SDR0403-5R6ML