REVISIONS					
REV	ECO	DESCRIPTION	DATE	BY	APPR
B1	-	RELEASED DRAWING	Nov-17-2014	Ben	Tommy
B2	-	VOLTAGE UPDATE AND ADD KEY ICON	Nov-23-2020	Ronald	Tommy

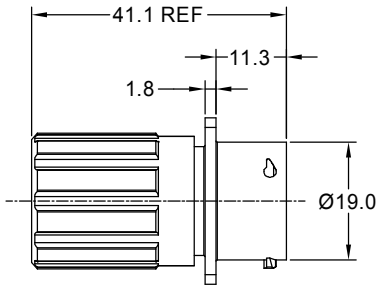

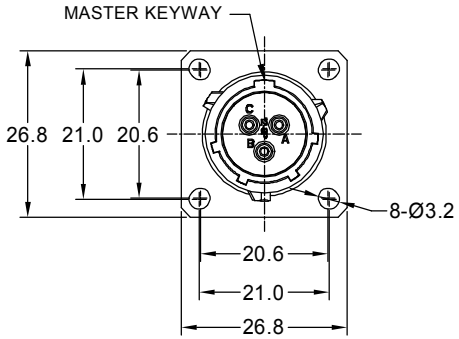

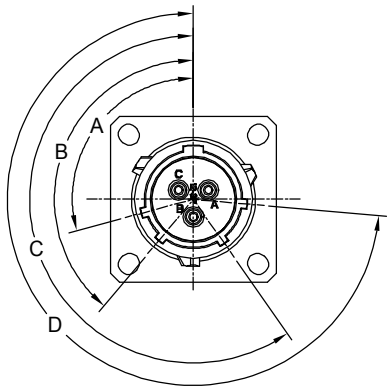

NOTES : (UNLESS OTHERWISE SPECIFIED)

1. MATERIAL :
   SHELL : ZINC ALLOY , NICKEL PLATED.
   INSERT : THERMOPLASTIC , UL94 V-0.
   END CAP : THERMOPLASTIC , UL94 V-0.
   PLASTIC BUSHING : THERMOPLASTIC , UL94 V-0.
   SEAL GASKET : NBR/SILICONE RUBBER.
   O-RING : NBR/SILICONE RUBBER.
   WIRE SEAL : SILICONE RUBBER.
2. SPECIFICATIONS :
   2.1 RATED CURRENT : 13A (MAX).
   2.2 RATED VOLTAGE : 500V (AC/DC) .
   2.3 OPERATING TEMPERATURE : SEE CHART.
   2.4 DIELECTRIC WITHSTANDING VOLTAGE : LESS THAN 2 MILLIAMPS CURRENT LEAKAGE@2000 VOLTS AC.
   2.5 INSULATION RESISTANCE : 5000 MEGOHMS MIN.
   2.6 IP--CLASS : IP67 (MATED CONDITION).
   2.7 MATING CYCLES DURABILITY : 500 CYCLES MIN.
   2.8 ROHS COMPLIANT.
3. SUITABLE CONTACTS : 16# CONTACTS.
4. ALL DIMENSIONS ARE FOR REFERENCE USE ONLY.
5. CONTACT SIZE AND REAR SEAL WIRE RANGE :

CONTACT SIZE	MIN. INSUL O.D.	MAX. INSUL O.D.	WIRE RANGE
16#	Ø2.0mm	Ø3.2mm	14 - 24AWG

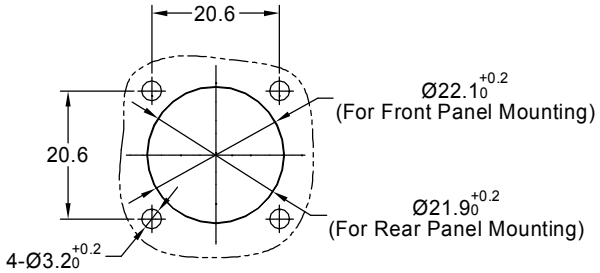

PANEL CUT OUT REFERENCE

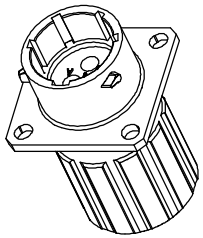

KEY POS	PART NUMBER		A	B	C	D
	-40°C ~ 105°C	-40°C ~ 125°C				
N	RT00123PNHEC	RT00123PNHEC03	105°	140°	215°	265°
W	RT00123PWHEC	RT00123PWHEC03	60°	140°	215°	265°
X	RT00123PXHEC	RT00123PXHEC03	105°	155°	215°	265°
Y	RT00123PYHEC	RT00123PYHEC03	105°	140°	225°	265°
Z	RT00123PZHEC	RT00123PZHEC03	105°	140°	215°	295°

QUANTITY	PART NUMBER	DESCRIPTION	ITEM
	SEE PART NUMBER CHART		

MATERIALS LIST

UNLESS OTHERWISE SPECIFIED
1) All dimensions are in metric(mm).
2) Tolerances are as follows:
1 PL DEC ±0.30 | Fractions ±1/64
2 PL DEC ±0.15 | Angles ±1°
3 PL DEC ±0.08
3) Note reference = X

MATERIAL SPECIFICATIONS:

PROCESS SPECIFICATIONS:

NEXT ASS'Y:

SIGNATURES		DATE
DRAWN:	Ronald	Nov-23-2020
CHECKED:	Flan	Nov-24-2020
ENGINEER:		
APPROVAL:	Tommy	Nov-25-2020
CUSTOMER:		

THIS DRAWING IS SUPPLIED FOR INFORMATION ONLY. DESIGN FEATURES, SPECIFICATIONS AND PERFORMANCE DATA SHOWN HEREON ARE THE PROPERTY OF THE AMPHENOL CORPORATION. NO RIGHTS OF REPRODUCTION ARE IMPLIED. ALL DIMENSIONS ARE SUBJECT TO NORMAL MANUFACTURING VARIATIONS.

Amphenol

Sine Systems - www.amphenol-sine.com
44724 Morley Drive
Clinton Township, MI 48036

ECOMATE RM,RECEPTACLE,
SIZE 12,3POS,PIN,END CAP.

SIZE B | TYPE C- | DWG NO: RT00123P*HECx | REVISION B2

SCALE: NONE | SHEET 1 OF 1

TITLE: ECOMATE RM,RECEPTACLE, SIZE 12,3POS,PIN,END CAP.
DWG NO: RT00123P*HECx
REV: B2
SH: 1
OF: 1