REVISIONS					
REV	ECO	DESCRIPTION	DATE	BY	APPR
B1	-	RELEASED DRAWING	JULY-02-2014	BEN	TOMMY

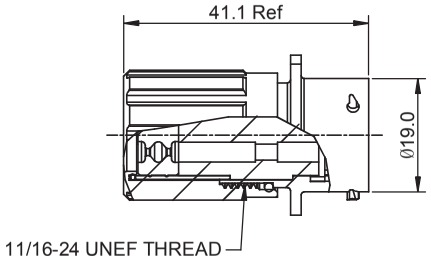

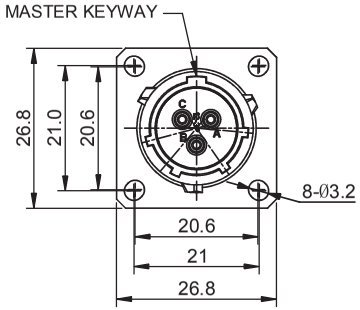

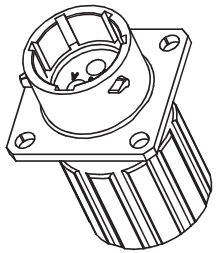

NOTES : (UNLESS OTHERWISE SPECIFIED)

1. MATERIAL :
   SHELL : ZINC ALLOY , NICKEL PLATED.
   INSERT : THERMOPLASTIC , UL94 V-0.
   END CAP : THERMOPLASTIC , UL94 V-0.
   PLASTIC BUSHING : THERMOPLASTIC , UL94 V-0.
   SEAL GASKET : NBR.
   O-RING : NBR.
   WIRE SEAL : SILICONE RUBBER.
2. SPECIFICATIONS :
   2.1 RATED CURRENT : 13A (MAX).
   2.2 RATED VOLTAGE : 300V (AC/DC) .
   2.3 OPERATING TEMPERATURE : -40°C ~ +105°C.
   2.4 DIELECTRIC WITHSTANDING VOLTAGE : LESS THAN 2 MILLIAMPS CURRENT LEAKAGE@2000 VOLTS AC.
   2.5 INSULATION RESISTANCE : 5000 MEGOHMS MIN.
   2.6 IP--CLASS : IP67.
   2.7 MATING CYCLES DURABILITY : 500 CYCLES MIN.
   2.8 ROHS COMPLIANT.
3. SUITABLE CONTACTS : 16# CONTACTS.
4. ALL DIMENSIONS ARE FOR REFERENCE USE ONLY.
5. CONTACT SIZE AND REAR SEAL WIRE RANGE :

CONTACT SIZE	MIN. INSUL O.D.	MAX. INSUL O.D.	WIRE RANGE
16#	Ø2.0mm	Ø3.2mm	14 - 24AWG

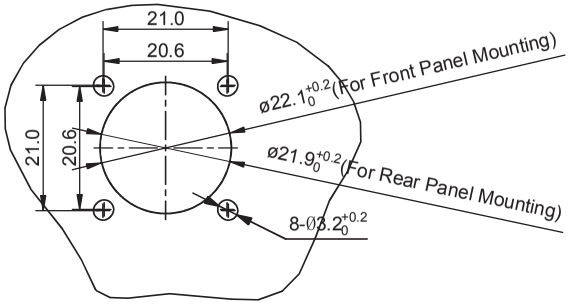

PANEL CUT OUT REFERENCE

KEY POS	PART NUMBER
N	RT00123PNHEC
W	RT00123PWHEC
X	RT00123PXHEC
Y	RT00123PYHEC
Z	RT00123PZHEC

QUANTITY	PART NUMBER	DESCRIPTION	ITEM
	SEE PART NUMBER CHART		

MATERIALS LIST

UNLESS OTHERWISE SPECIFIED
1) All dimensions are in metric(mm).
2) Tolerances are as follows:
1 PL DEC ±0.30 | Fractions ±1/64
2 PL DEC ±0.15 | Angles ±1°
3 PL DEC ±0.08
3) Note reference = X

MATERIAL SPECIFICATIONS:

PROCESS SPECIFICATIONS:

NEXT ASSY:

SIGNATURES		DATE
DRAWN:	BEN	JULY-02-2014
CHECKED:		
ENGINEER:		
APPROVAL:		
CUSTOMER:		

THIS DRAWING IS SUPPLIED FOR INFORMATION ONLY. DESIGN FEATURES, SPECIFICATIONS AND PERFORMANCE DATA SHOWN HEREON ARE THE PROPERTY OF THE AMPHENOL CORPORATION. NO RIGHTS OF REPRODUCTION ARE IMPLIED. ALL DIMENSIONS ARE SUBJECT TO NORMAL MANUFACTURING VARIATIONS.

Amphenol
Sine Systems - www.amphenol-sine.com
44724 Morley Drive
Clinton Township, MI 48036

ECO-MATE,RECEPTACLE,
SIZE 12,3POS,PIN,END CAP.

SIZE B | TYPE C- | DWG NO: RT00123P*HEC | REVISION B1
SCALE: NONE | SHEET 1 OF 1

TITLE: ECO-MATE,RECEPTACLE, SIZE 12,3POS,PIN,END CAP.
DWG NO: RT00123P*HEC
REV: B1
SH: 1
OF: 1