RF292A2PEGB Datasheet

Product Name // 2.92mm Plug Straight 2 Hole Flange RF Connector

View Product Page

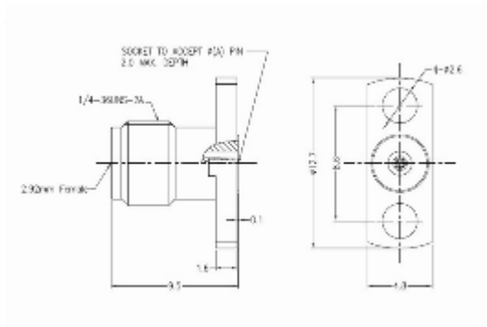

// Product Description:

- 2.92mm Plug Straight 2 Hole Flange RF Connector
- Maximum Voltage: 250V
- Temperature range: -40Â°C to +85Â°C
- Frecuency range: 0GHz - 40GHz
- VSWR:
- Dielectric withstanding Voltage: >750V
- Impedance: 50Ohm
- Body Material: Stainless Steel Passivation
- Contact Material: Beryllium Copper

// General Information:

Product Display Title:	2.92mm Series Socket 2 Hole Flange
Product Family:	Radio Frequency Connectors
Product Series:	2.92mm Series
Weight:	1
Body Length:	12.90mm
Body Material:	Stainless Steel Passivation
Centre Contact Retention Force:	>20N
Contact Pin Material:	Beryllium Copper
Min Coupling Torque:	0.80Nm
Max Coupling Torque:	1.10Nm
Dielectric Withstanding Voltage:	>750V
Durability:	>500 cycles
Flange Mount Length:	15.80mm
Function:	Male Flange Mount RF Connector
Impedance:	50Ohm
Insulation Resistance:	>5000MOhm
Insulator:	UNFILLED ULTEM 1000/PEI
Max Operating Temperature:	+85°C
Min Operating Temperature:	-40°C
Mount Hole Distance:	12.20mm
Min Operating Frequency:	0GHz
Max Operating Frequency:	40GHz
Socket Diameter:	0.30mm
Thread Size:	1/4 36UNS 2A
Voltage Max:	250V
Vswr:	<1.30

// Product PDF Links

2.92mm Series Product Datasheet

// Product 3D CAD Model Links

RF292A2PEGB3D CAD Model