Enplas

株式会社エンプラス
重要製品

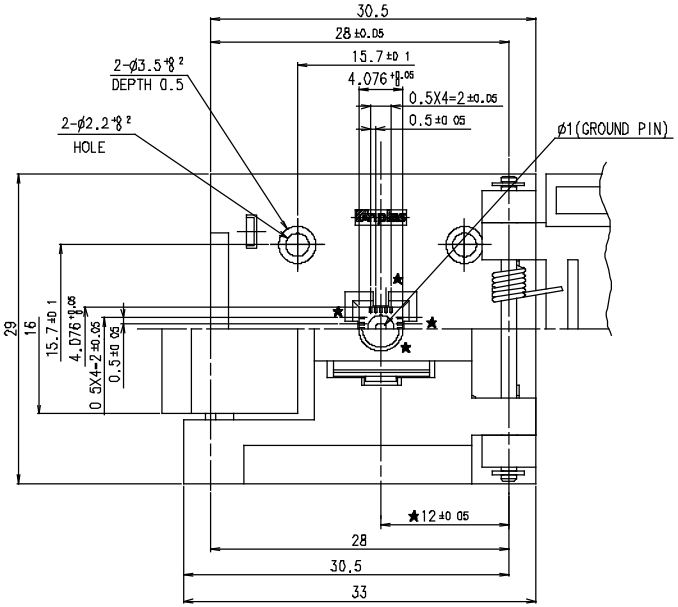

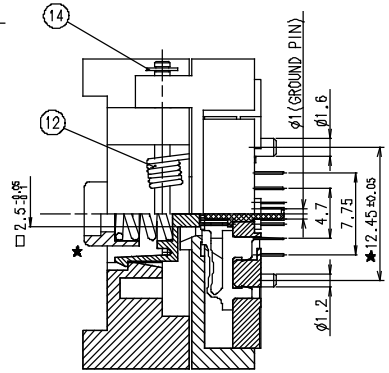

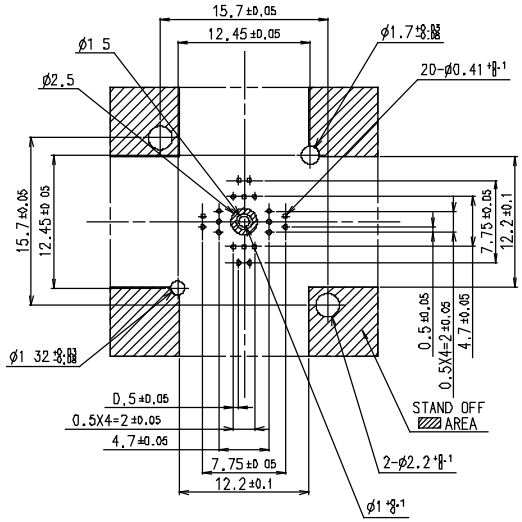

PCB PATTERN (TOP VIEW)
(S=3:1)

【改訂内容は★印】

改訂図 NO. 1

NOTES

1) MARK PIN COUNT WITH LASER MARK.

★ 2) Under the any humidity involved testing, the socket MUST be fixed on the BIB with provided screws.

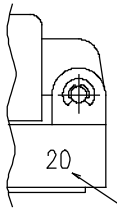

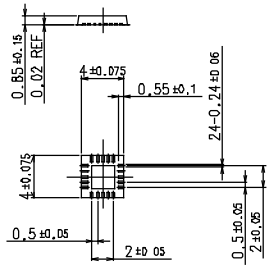

MATCHING DEVICE
(S=3:1)

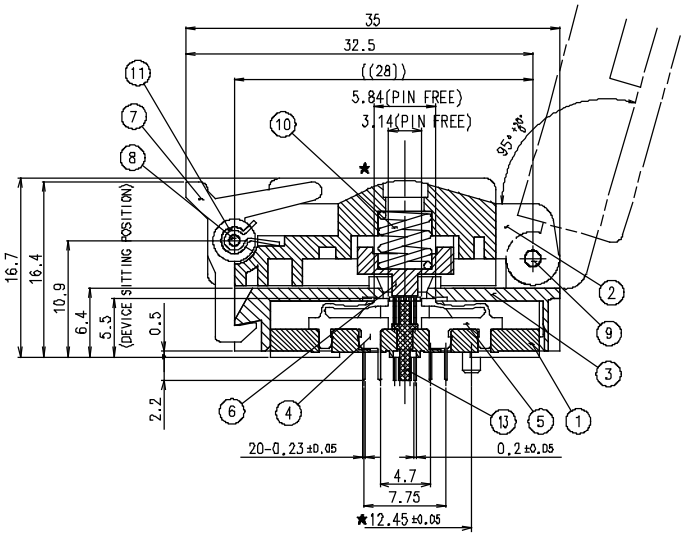

A2-PN-SP

SPECIFICATION 仕様	
CONTACT RESISTANCE 接触抵抗	50mΩ or less at 10mA (INITIAL)
DIELECTRIC WITHSTANDING VOLTAGE 耐電圧	500 V.A.C for 1 minute
INSULATION RESISTANCE 絶縁抵抗	1000 MΩ or more at 500V.D.C
OPERATING TEMPERATURE 使用温度	-65℃~150℃
RETENTION FORCE 端子抜け強度	4.9N(0.5kgf) for 1 minute
INSERTION 寿命	10000 cycle(MECHANICAL)

	SYM 符号	CUSTOMER'S PART NO. 顧客品番	DWG. NO. 図番	NAME 品名	MAT'L 材質	Q'TY 個数	REMARKS 備考
★	17	COTS	55-113-131-01	HEX. THIN NUT M2	SUS	2	SHIP WITH SOCKETS
★	16	COTS	55-113-111-01	SPRING LOCK WASHER 2.0	SUS	2	SHIP WITH SOCKETS
★	15	COTS	55-113-009-01	PAN HEAD SCREW M2XL10	SUS	2	SHIP WITH SOCKETS
	14	COTS	55-113-002-01	E-RING(φ1.2)	SUS	2	
	13	QFN-16-0.5-01-12	55-111-861-01	GROUND PIN	BRASS	1	
	12	FP-28-1.27-09-003	55-112-035-01	COIL SPRING	SUS	1	FOR COVER
	11	FPQ-64-1.0-01-004	55-112-007-01	COIL SPRING	SUS	1	FOR STOPPER
	10	QFN-36-0.5-01-11	55-112-810-01	COIL SPRING	SUS	1	FOR PUSHER
	9	QFN-68-0.5-01-10	55-111-834-01	SHAFT	SUS	1	FOR COVER
	8	QFN-68-0.5-01-09	55-111-833-01	SHAFT	SUS	1	FOR STOPPER
	7	FPQ-64-1.0-01-003	55-299-043-01	STOPPER	PPS	1	
	6	QFN-20-0.5-01-06	56-290-912-01	PUSHER	PES	1	
	5	QFN-68-0.5-01-08	56-110-743-01	FNA0 CONTACT	BeCu	8	
	4	QFN-68-0.5-01-07	56-110-742-01	FMZ0 CONTACT	BeCu	12	
★	3	QFN-28-0.5-01-04	57-290-445-01	GUIDE	PES	1	
	2	QFN-68-0.5-01-05	56-290-835-01	COVER	PES	1	
	1	QFN-20-0.5-01-01	56-290-841-01	BODY	PES	1	

ESP CONFIDENTIAL

1			
2			
3			
4			
5			
6	'05/2/1	改訂図No.1発行 (変更は★部14ヶ所)	C.I
	DATE 年月日	REVISIONS 訂正箇所	APP. 承認 / SIGN 担当

USED FOR 機種

CUSTOMER'S PART NO 顧客品番

GENERAL TOLERANCES 一般公差: ±0.3, ±10°

APPROVED BY 承認者: N.TAKAYAMA
CHECKED BY 検図者: N.TAKAYAMA
DESIGNED BY 設計者: H.KISO
DRAWN BY 製図者:
ISSUED ON 作成年月日: 2003/11/25

NAME 品名: QFN-20BT-0.5-01-00 IC SOCKET

SCALE 尺度: 3 : 1
REV.NO. b

DRAWING NO. 図番: 55-037-017-01 1/1

B-RIGHT