REV.	ECN NO.	DATE	SIGN	DESCRIPTION
A		2019/11/29	NianPing Yu	New initial

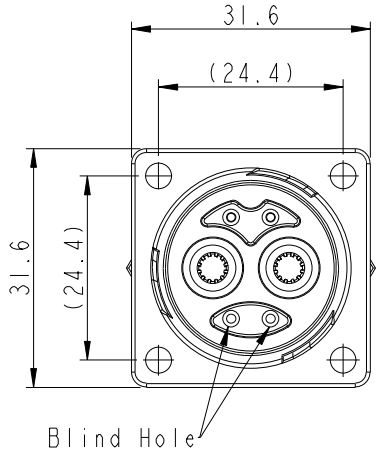

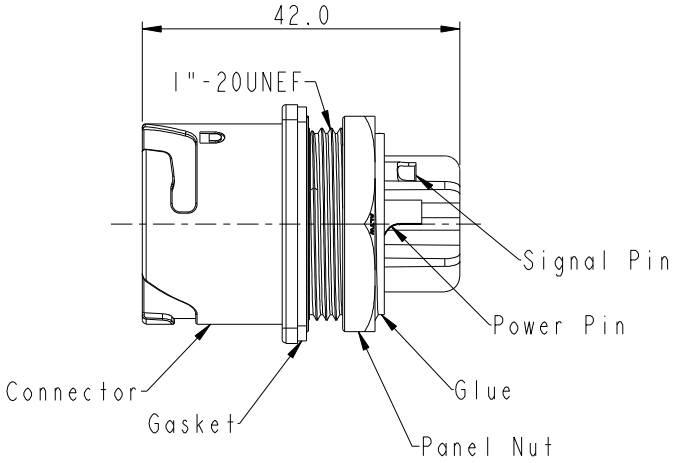

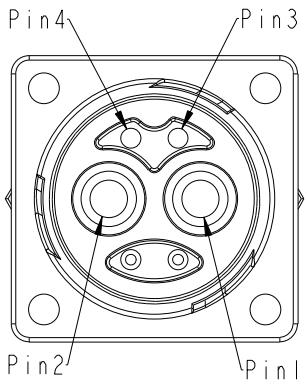

Pin Assignments
Front View

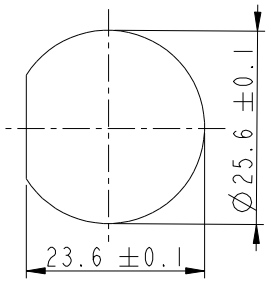

Recommended
Panel Cut-Out1
(Use Panel Nut)

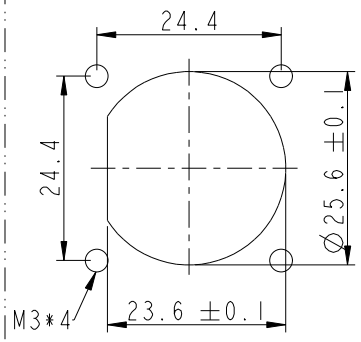

Recommended
Panel Cut-Out2
(Use Screw)

Notes:
* Waterproof Rate: IP67(Mated).
* Connector: Thermoplastic, Black.
* Power Pin: Copper Alloy, Gold Plated.
* Signal Pin: Copper Alloy, Gold Plated.
* Gasket: Rubber.
* Panel Nut: Thermoplastic, Black.
* Use Waterproof Cap or Dust Cap
  Panel Thickness Max.: 3.0mm.
* Without Waterproof Cap or Dust Cap
  Panel Thickness Max.: 4.0mm.
* Other:
  Recommended Wire Spec(Power):
    Conductor: 8 AWG~9 AWG(8.37mm^2~6.63mm^2)
  Recommended Wire Spec(Signal):
    Conductor: 20 AWG~22 AWG(0.52mm^2~0.32mm^2)
  Current Rating: 50A(Power), 1A(Signal).
  Voltage Rating: 600V(Power), 30V(Signal).
  Un-assenbly Nut Shipment.

UNIT: mm

TOLERANCE: ±0.5 mm

TITLE: POWER, PANEL, REAR MOUNT M CONN F PIN

SCALE: 1:1 | SIZE: A4 | SHEET 1 OF 1

REV. A | WC-REV. .0 | QC: Inspection item

Amphenol LTW
安費諾亮泰企業股份有限公司

ITEM NO: PWMU-04RMFS-TS7001	DRAWN BY: NianPing Yu	DATE: 2019/11/29
DWG NO: PWMU-04RMFS-TS7001	CHECKED BY: Fisher Wang	DATE: 2019/11/29
CUSTOMER: ALTW	APPROVED BY: Max Yang	DATE: 2019/11/29

W10814-03-RM01A2

THIS DOCUMENT IS SUBJECT TO CHANGE WITHOUT NOTICE. IT IS CONFIDENTIAL AND A PROPERTY OF Amphenol LTW. DISCLOSURE TO THIRD PARTY HAS TO BE AUTHORIZED BY Amphenol LTW.