A product Line of
Diodes Incorporated

PI3HDX1204B1

HDMI 2.0 6Gbps Limiting ReDriver with High EQ, Low Jitter and DP++ Level Shifter

Description

PI3HDX1204B1 is a ReDriver™ device suitable for HDMI 2.0 6.0 Gbps with programmable high equalization, output swing and de-emphasis control mode. The maximum EQ of the device is +22dB @ 6Gbps and it can deliver 2x better additive jitter performance compared to the traditional ReDriver devices.

In addition, the device can support the Dual-Mode DisplayPort Level Shifter application for HDMI 2.0 compliant output signals.

The device's EQ/SW/De-emphasis settings can be configured by the pin-strapping or the I2C programming to optimize differential signal performance over various physical media.

Features

- HDMI 2.0 compliant Limiting-type Redriver to compensate high insertion loss of the long TMDS signal transmission
- Support Dual-mode DP HBR3 to HDMI 2.0 Level Shifting
- Double the jitter performance than conventional CMOS-process redriver
- Input EQ support 16 steps up to +22.2dB @ 3GHz (6 Gbps), 4 steps De-emphasis and 4 steps output voltage swing setting
- Independent each channel configuration for Equalization, Output Swing and De-emphasis
- Built-in channel activity detector with selectable input termination between 50Ω to V_{DD} and 200kΩ to V_{DD}
- Pin Strap and I^2C selectable device programming mode support
- Supply Voltage: 3.3V
- Industrial Temperature Range: -40°C to 85°C
- Totally Lead-Free & Fully RoHS Compliant (Notes 1 & 2)
- Halogen and Antimony Free. "Green" Device (Note 3)
- For automotive applications requiring specific change control (i.e. parts qualified to AEC-Q100/101/200, PPAP capable, and manufactured in IATF 16949 certified facilities), please contact us or your local Diodes representative. https://www.diodes.com/quality/product-definitions/
- Packaging (Pb-free & Green): 42-contact TQFN (3.4x9mm)

Applications

- Notebooks, Desktops and AIO PCs
- HDMI Active cables
- Internal board connection inside Video system

ReDriver is a trademark of Diodes Incorporated.

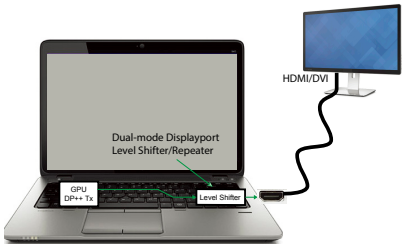

Figure 1-1 DP++ to HDMI 2.0 Level Shifter

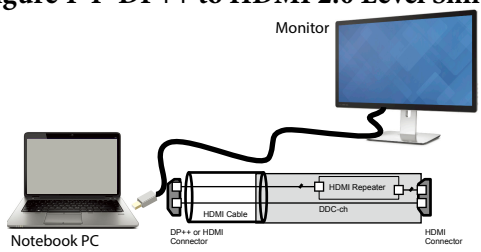

Figure 1-2 HDMI 2.0 Active cable application

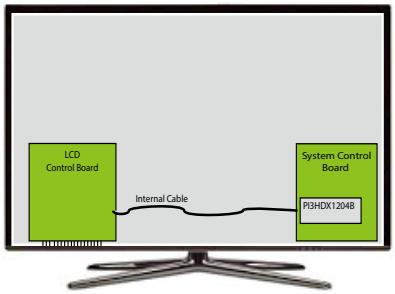

Figure 1-3 TMDS Connection inside TV

Ordering Information

Ordering Number	Package Code	Package Description
PI3HDX1204B1ZHEX	ZH	42-pin TQFN (3.5x9mm)
PI3HDX1204B1ZHIEX	ZH	Industrial-temp, 42-pin TQFN (3.5x9mm)

Notes:
1. No purposely added lead. Fully EU Directive 2002/95/EC (RoHS), 2011/65/EU (RoHS 2) & 2015/863/EU (RoHS 3) compliant.
2. See https://www.diodes.com/quality/lead-free/ for more information about Diodes Incorporated's definitions of Halogen- and Antimony-free, "Green" and Lead-free.
3. Halogen- and Antimony-free "Green" products are defined as those whichcontain <900ppm bromine, <900ppm chlorine (<1500ppm total Br + Cl) and <1000ppm antimony compounds.
4. E = Pb-free and Green, I=Industrial
5. X suffix = Tape/Reel

© Diodes Incorporated

2. General Information

2.1 Revision History

Date	Revision	Description
July 2016	–	Application chapter: Updated reference schematics in application chapter. Add load switch AP2151 requirement to protect sink to source-side devices back drive.
Sep 2016	–	Finial datasheet release with package pin-out typo fixed - pin name 30, 37 and 38
Dec 2016	–	Correct typos by removing Threshold detector VTH1/0, Output Swing Control VOD0 table in the functional description. Those pins do not bond out in PI3HDX1204B1.
Jan 2017	–	In Fig 6-6 sink application circuit, removed load switch and regulator.
Oct 2017	–	Ch2. Similar product comparison table added.
Nov 2019	1	Updated Section 1 Description Updated Section 6.2 Recommended Operation Conditions Updated Section 6.3.5 Switching Characteristics
Nov 2019	2	Updated Section 5.1 Address Assignment
Dec 2019	3	Updated Section 6.3.2 Power Dissipation

2.2 Similar Products Comparison

	PI3HDX1204B1	PI3HDX1204E
Redriver Type	Limiting type	Linear type
EQ at 6Gbps	22 dB	10 dB
TMDS Tr/Tf time	Tr adjustment for short pre-channel trace application	Followed Source Rising/Falling time
Output TMDS peak-to-peak Swing	Output Swing Amplitude / Pre-Emphasis control. Blocking type	Follow Source Swing Amplitude. Non-blocking type.
DDC Switch/Buffer	No	No
HDMI1.4/2.0 Type ID	No	No
Ioff Protection	External Power Switch	External Power Switch
Data Rate (Gbps)	6 Gbps	6 Gbps
Application	Near to Source-side device	Near to Sink-side device
Availability	Production.	Production
Recommendation	Place close to Source Transmitter, drive signals with increased TMDS swing.	Place close to Sink Receiver, let Adaptive EQ Rx-DFE to control channel signals

© Diodes Incorporated

Contents

2. General Information 2
2.1 Revision History 2
2.2 Similar Products Comparison 2
3. Pin Configuration 4
4. Functional Description 6
4.1 Functional Block Diagram 6
4.2 Function settings 6
4.3 Output Eye Diagram changes with Different EQ setting 8
5. I2C Programming 11
5.1 Address assignment 11
5.2 I^2C Data Transfer Sequence 13
6. Electrical 14
6.1 Absolute Maximum Ratings 14
6.2 Recommended Operation Conditions 14
6.3 DC/AC Characteristics 14
6.4 I2C Bus 18
7. Application/Implementation 20
7.1 Source Application 20
7.2 Sink Application 22
7.3 DC/AC-coupled Application 23
7.4 Product Layout Guideline 24
7.5 General Layout Guideline 27
7.6 CTS Test Report 33
8. Mechanical/Packaging Information 35
8.1 Mechanical 35
8.2 Part Marking Information 36
8.3 Tape & Reel Materials and Design 36
8. Important Notice 41

© Diodes Incorporated

3. Pin Configuration

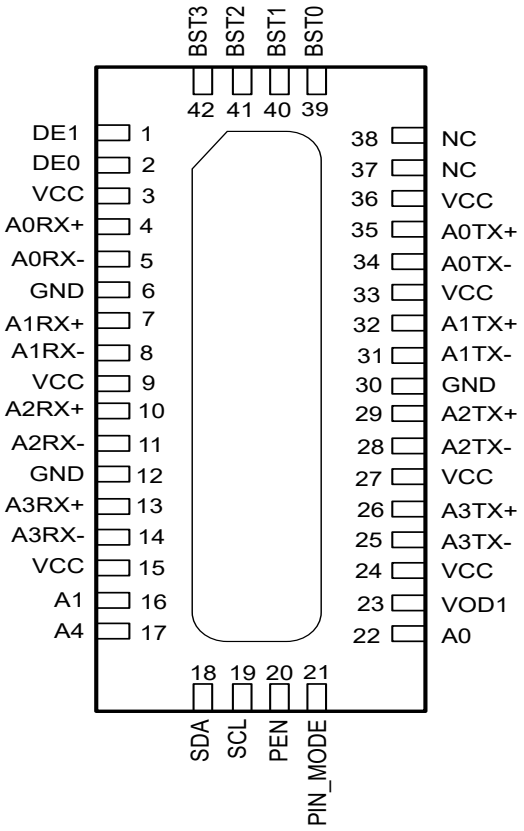

Figure 3-1 Package Pin-out (Top-Side View)

© Diodes Incorporated

Table 3-1. Pin Description

Pin #	Pin Name	Type	Description
Data Signals			
4 5	A0RX+ A0RX-	I	TMDS inputs for Channel A0, with internal 50-Ohm Pull-Up and ~200k-Ohm Pull-Up otherwise.
35 34	A0TX+, A0TX-	O	TMDS outputs for Channel A0, with internal 50-Ohm Pull-Up and ~2k-Ohm Pull-Up otherwise.
7 8	A1RX+, A1RX-	I	TMDS inputs for Channel A1, with internal 50-Ohm Pull-Up and ~200k-Ohm Pull-Up otherwise.
32 31	A1TX+, A1TX-	O	TMDS outputs for Channel A1, with internal 50-Ohm Pull-Up and ~2k-Ohm Pull-Up otherwise.
10 11	A2RX+, A2RX-	I	TMDS inputs for Channel A2, with internal 50-Ohm Pull-Up and ~200k-Ohm Pull-Up otherwise.
29 28	A2TX+, A2TX-	O	TMDS outputs for Channel A2, with internal 50-Ohm Pull-Up and ~2k-Ohm Pull-Up otherwise.
13 14	A3RX+, A3RX-	I	TMDS inputs for Channel A3, with internal 50-Ohm Pull-Up and ~200k-Ohm Pull-Up otherwise.
26 25	A3TX+, A3TX-	O	TMDS outputs for Channel A3, with internal 50-Ohm Pull-Up and ~2k-Ohm Pull-Up otherwise.
Control Signals			
19	SCL	I	I^2C Clock input.
18	SDA	I/O	I^2C Data input/output.
17, 16, 22	A4, A1, A0	I	I^2C programmable address bits, with internal 100k-Ohm Pull-Up.
20	PEN	I	Power Enable with internal 100K-Ohm Pull-Up
21	Pin_Mode	I	Input with internal 100k-Ohm Pull-Up. When HIGH, each channel is programmed by the external pin voltage. When LOW, each channel is programmed by the data stored in the I^2C bus.
42 41 40 39	BST[3:0]	I	Inputs with internal 100k-Ohm Pull-Up. This pins set the amount of Equalizer Boost in all channel when Pin mode is HIGH.
23	VOD1	I	Inputs with internal 100k-Ohm Pull-Up. This pin sets the output Voltage Level in all channel when Pin mode is HIGH.
1 2	DE[1:0]	I	Inputs with internal 100k-Ohm Pull-Up. This pins set the output De-Emphasis Level in all channel when Pin_Mode is HIGH.
38, 37	NC	NC	No Connect
Power Pins			
6, 12, 30, Center Pad	GND	GND	Ground Pins
3, 9, 15, 24, 27, 33, 36	V_{DD}	PWR	Power Supply Pins

© Diodes Incorporated

4. Functional Description

4.1 Functional Block Diagram

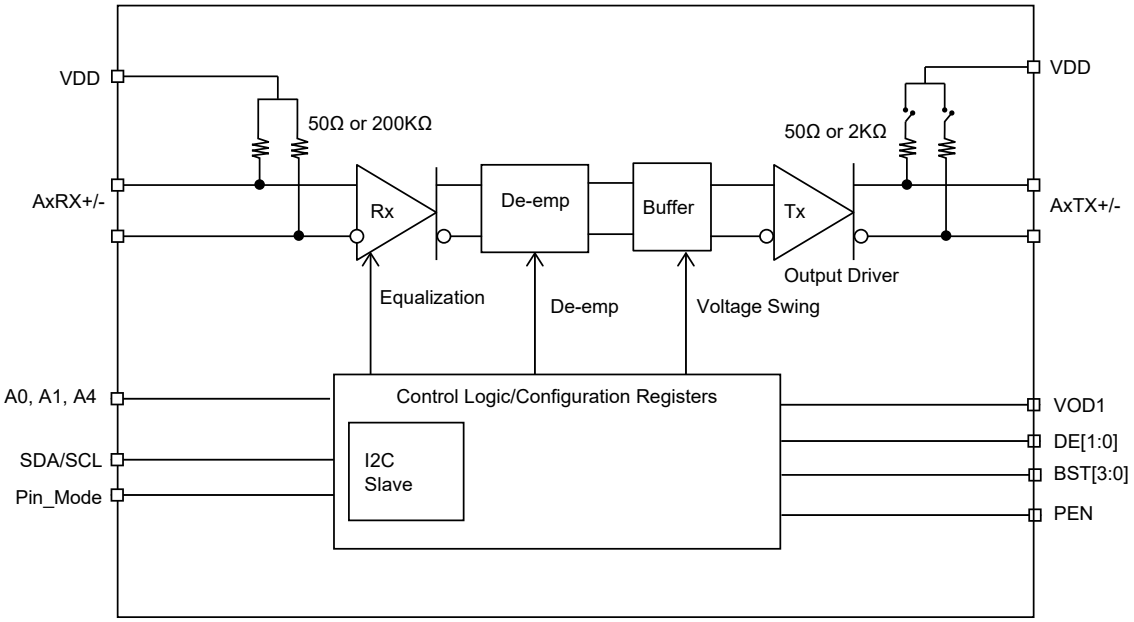

Figure 4-1 Functional block diagram

4.2 Function settings

4.2.1 Output Termination Detector

On power up or when PEN becomes true, the output resistance is set to 2K ohms, and the input resistance is set to 200K ohms. The device continually looks to detect an external 50 ohm termination resistor on a per channel basis. If no 50 ohms is detected in the first 5ms of time, the channel is continually polled with 5ms detection cycle until detection occurs.

4.2.2 Power Enable function

One pin control or I2C control, when PEN is set to low, the IC goes into power down mode, both input and output termination set to 200K and 2K respectively. Individual Channel Enabling is done through the I2C register programming.

4.2.3 Equalization Setting

BST[3:0] are the selection pins for the equalization selection for each channel.

© Diodes Incorporated

Table 4-1. Table 1. Equalization Setting

BST3	BST2	BST1	BST0	6Gbps (3GHz)	8Gbps (4GHz)
0	0	0	0	0.25 dB	0.4 dB
0	0	0	1	0.8 dB	1.1 dB
0	0	1	0	1.1 dB	1.6 dB
0	0	1	1	2.2 dB	3.1 dB
0	1	0	0	4.1 dB	5.4 dB
0	1	0	1	7.1 dB	8.9 dB
0	1	1	0	9.0 dB	10.8 dB
0	1	1	1	10.3 dB	12.2 dB
1	0	0	0	11.8 dB	13.8 dB
1	0	0	1	13.9 dB	15.8 dB
1	0	1	0	15.3 dB	17.3 dB
1	0	1	1	16.9 dB	19.0 dB
1	1	0	0	17.9 dB	20.0 dB
1	1	0	1	19.2 dB	21.3 dB
1	1	1	0	20.5 dB	22.6 dB
1	1	1	1	22.2 dB	24.3 dB

4.2.4 Output De-emphasis Setting

De-emphasis Setting: DE[1:0] are the selection bits for the de-emphasis value.

Table 4-2. Output De-emphasis Setting

DE1	DE0	De-emphasis
0	0	0 dB
0	1	-0.5 dB
1	0	-0.7 dB
1	1	-1.0 dB

4.2.5 Output Voltage Swing Setting

Swing Setting: VOD1 is the selection bit for the output swing voltage value.

Table 4-3. Output Voltage Swing Setting

VOD1	Output Voltage Swing
0	0.85 Vppd
1	1.15 Vppd

© Diodes Incorporated

4.3 Output Eye Diagram changes with Different EQ setting

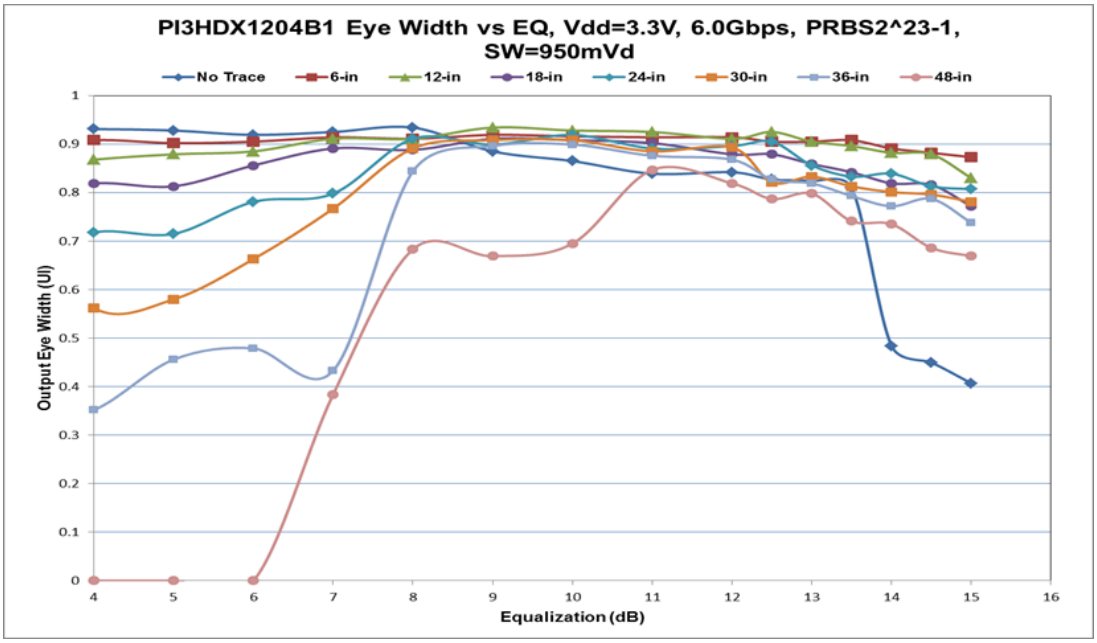

Figure 4-2 Eye Width vs. Input Equalization at Different Input trace Lengths

© Diodes Incorporated

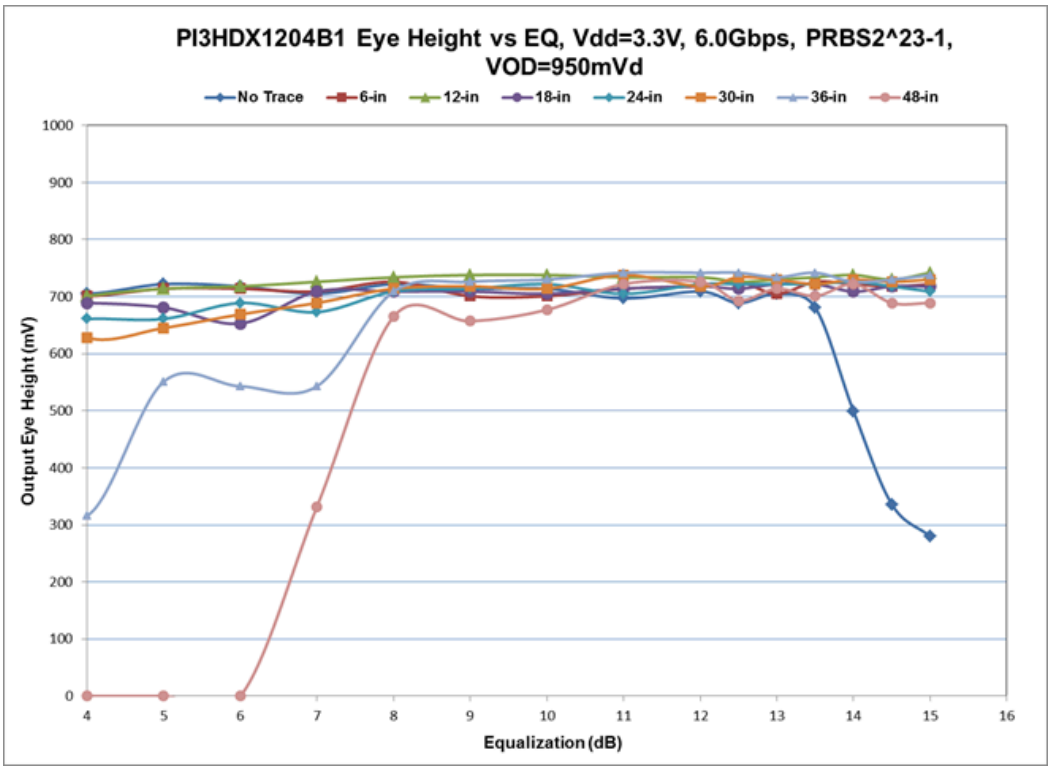

Figure 4-3 Eye Height vs. Input Equalization at Different Input trace Lengths

© Diodes Incorporated

Table 4-4. Input Eye Diagram without trace boards

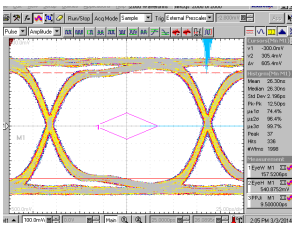

6-in trace

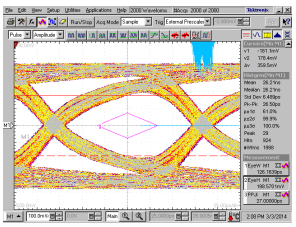

18-in trace

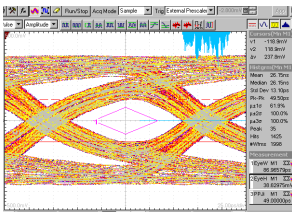

24-in trace

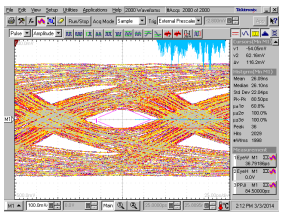

30-in trace

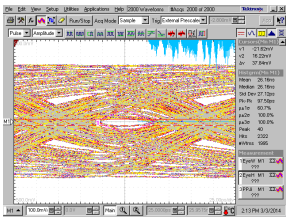

36-in trace

Table 4-5. Output Eye Opening with trace and different EQ Settings, 6.0 Gbps, Vdd=3.3V, 25C

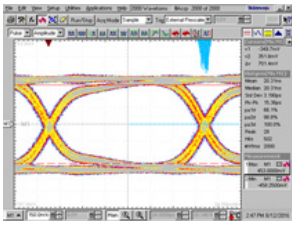

6-in trace
EQ=0001 (0.8dB)

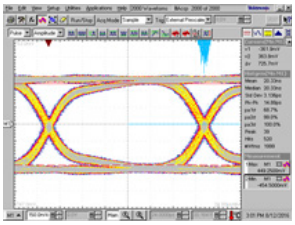

12-in trace
EQ=0100(4.1dB)

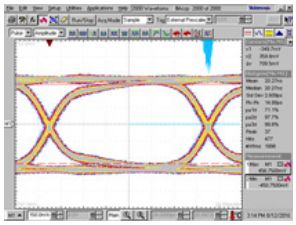

18-in trace
EQ=0110(9.0dB)

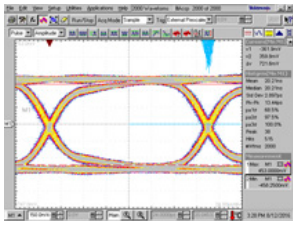

24-in trace
EQ=0111(10.3dB)

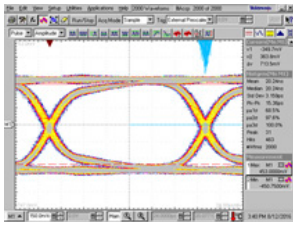

30-in trace
EQ=0111(10.3dB)

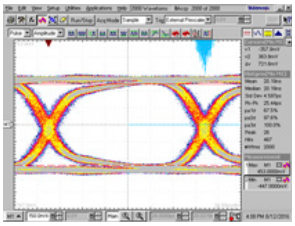

48-in trace
EQ=1000(11.8dB)

Note: Trace Card Loss Informations is shown below.

Frequency	3 GHz	6GHz	Units
6 inch Input Trace	-2.1	-4	dB
12 inch Input Trace	-4	-7.5	dB
18 inch Input Trace	-6.1	-11.3	dB
30 inch Input Trace	-10.14	-18	dB
36 inch Input Trace	-12.13	-22	dB
48 inch Input Trace	-16.42	-29	dB

© Diodes Incorporated

5. I2C Programming

5.1 Address assignment

A6	A5	A4	A3	A2	A1	A0	R/W
1	1	Controlled by Pin# A4	0	0	Program Controlled by Pin# A1	Program Controlled by Pin# A0	1=R, 0=W

BYTE 0: Reserved

BYTE 1				
Bit	**Type**	**Power up condition**	**Control affected**	**Comment**
[7:0]	R	0	Not used	

BYTE 2				
Bit	**Type**	**Power up condition**	**Control affected**	**Comment**
7	R/W	Latch from PEN input at startup	Ch3 Enable	1 = Enable
6	R/W		Ch2 Enable	
5	R/W		Ch1 Enable	
4	R/W		Ch0 Enable	
[3:0]	R/W	0	Not used	

BYTE 3				
Bit	**Type**	**Power up condition**	**Control affected**	**Comment**
7	R/W	Latch from BST[3:0] at startup	BST3 Ch1	
6	R/W		BST2 Ch1	
5	R/W		BST1 Ch1	
4	R/W		BST0 Ch1	
3	R/W		BST3 Ch0	
2	R/W		BST2 Ch0	
1	R/W		BST1 Ch0	
0	R/W		BST0 Ch0	

© Diodes Incorporated

BYTE 4				
Bit	**Type**	**Power up condition**	**Control affected**	**Comment**
7	R/W	Latch from BST[3:0] at startup	BST3 Ch3	
6	R/W		BST2 Ch3	
5	R/W		BST1 Ch3	
4	R/W		BST0 Ch3	
3	R/W		BST3 Ch2	
2	R/W		BST2 Ch2	
1	R/W		BST1 Ch2	
0	R/W		BST0 Ch2	

BYTE 5				
Bit	**Type**	**Power up condition**	**Control affected**	**Comment**
7	R/W	Latch from VOD1 at startup	VOD1 Ch3	
6	R/W	VOD0 = "1"	VOD0 Ch3	
5	R/W	Latch from VOD1 at startup	VOD1 Ch2	
4	R/W	VOD0 = "1"	VOD0 Ch2	
3	R/W	Latch from VOD1 at startup	VOD1 Ch1	
2	R/W	VOD0 = "1"	VOD0 Ch1	
1	R/W	Latch from VOD1 at startup	VOD1 Ch0	
0	R/W	VOD0 = "1"	VOD0 Ch0	

BYTE 6				
Bit	**Type**	**Power up condition**	**Control affected**	**Comment**
7	R/W	Latch from DE[1:0] at startup	DE1 Ch3	
6	R/W		DE0 Ch3	
5	R/W		DE1 Ch2	
4	R/W		DE0 Ch2	
3	R/W		DE1 Ch1	
2	R/W		DE0 Ch1	
1	R/W		DE1 Ch0	
0	R/W		DE0 Ch0	

BYTE 7-9: Reserved

BYTE A-F: Reserved

© Diodes Incorporated

5.2 I²C Data Transfer Sequence

Read sequence

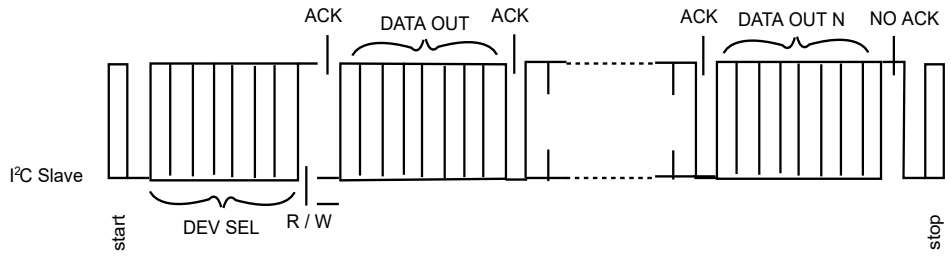

Write sequence

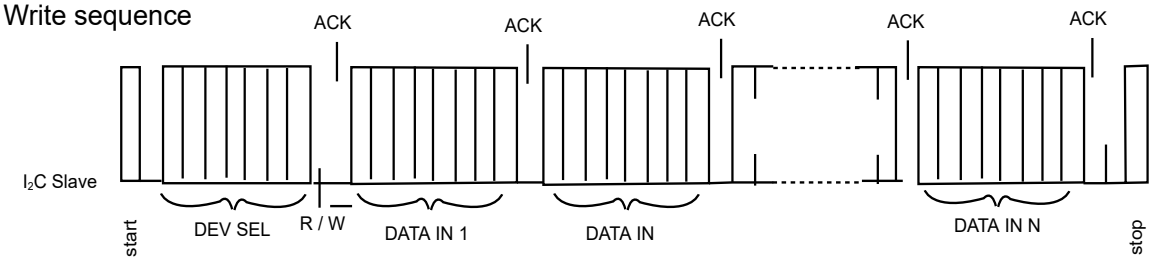

Notes:
1. only block read and block write from the lowest byte are supported for this application.
2. for some I2C application, an offset address byte will be presented at the second byte in write command, which is called dummy byte here and will be simply ignored in this application for correct interoperation.

© Diodes Incorporated

6. Electrical

6.1 Absolute Maximum Ratings

Supply Voltage to Ground Potential. . . . . –0.5V to +3.8V
DC SIG Voltage . . . . . –0.5V to + 3.8V
Output Current . . . . . –25mA to +25mA
Power Dissipation Continuous 2.1W
ESD, HBM . . . . . –2 kV to +2 kV
Storage Temperature . . . . . –65 °C to +150 °C

Note
(1) Stresses greater than those listed under MAXIMUM RATINGS may cause permanent damage to the device. This is a stress rating only and functional operation of the device at these or any other conditions above those indicated in the operational sections of this specification is not implied. Exposure to absolute maximum rating conditions for extended periods may affect reliability.

6.2 Recommended Operation Conditions

Parameter		Min.	Typ.	Max	Units
Power supply voltage (VDD to GND)(1)		3.0	3.3	3.6	V
I2C (SDA, SCL)				3.6	V
Supply Noise Tolerance up to 25 MHz(2)				100	mVp-p
Ambient Temperature	Industrial Temperature Range	-40		85	°C
	Commercial Temperature Range	0		70	

Note
(1) Typical parameters are measured at VDD = 3.3 ± 0.3V, TA = 25°C. They are for the reference purposes, and are not production-tested
(2) Allow supply noise (mVp-p sine wave) under typical condition

6.3 DC/AC Characteristics

6.3.1 LVCMOS DC specifications

Symbol	Parameter	Conditions	Min.	Typ.	Max	Unit
V_{IH}	DC input logic high		$V_{DD}/2 + 0.7$		$V_{DD} + 0.3$	V
V_{IL}	DC input logic low		-0.3		$V_{DD}/2 - 0.7$	V
V_{OH}	At I_{OH} = -200µA		$V_{DD} + 0.2$			V
V_{OL}	At I_{OL} = -200µA				0.2	V
V_{hys}	Hysteresis of Schmitt trigger input		0.8			V

6.3.2 Power Dissipation

Symbol	Parameter	Conditions	Min.	Typ.	Max.	Units
I_{max}	Supply Current	PEN = 1, EQ = 0dB, De-emphasis = 0dB, All 4 channels 0.8V Swing		265	325	mA
		PEN = 1, EQ = 0dB, De-emphasis = 0dB, All 4 channels 1.3V Swing		300	350	mA
I_{DDQ}	Quiescent Supply Current	PEN=0, high speed TMDS channels disabled		0.3		mA

© Diodes Incorporated

6.3.3 Package power ratings

Package	Theta Ja(still air) (°C/W)	Theta Jc (°C/W)	Max. Power Dissipation Rating (Ta ≤ 70°)
42-pin TQFN (ZH42)	33.69	15.17	1.63W

6.3.4 TMDS Differential Pins

Symbol	Parameter	Conditions	Min.	Typ.	Max.	Units
V_{OH}	Single-ended High Level Output Voltage	VDD = 3.3 V, Rout = 50 Ohm	V_{DD}-10		V_{DD}+10	mV
V_{OL}	Single-ended Low Level Output Voltage		V_{DD}-600		V_{DD}-400	mV
V_{swing}	Output Voltage Swing		700		1300	mVppd
R_T	Input Termination Resistance	V_{IN} = 2.9V	45	50	55	Ohm
I_{OZ}	Leakage Current with Hi-Z I/O	V_{DD} = 3.6V			10	uA

6.3.5 Switching Characteristics

Symbol	Parameter	Conditions	Min.	Typ.	Max.	Units
T_{pd}	Propagation Delay				2000	ps
T_r	Tx Signal Rise Time (20% - 80%)	VDD = 3.3V, RT = 50 Ohm, Pre-/De-emp = 0 dB		40		ps
T_f	Tx Signal Fall Time (80% - 20%)			40		ps
$T_{sk(p)}$	Pulse Skew			10	50	ps
$T_{sk(D)}$	Intra-pair Differential Skew			23	50	ps
$T_{sk(O)}$	Inter-pair Differential Skew				100	ps
$T_{Jit\text{-}Clk}$	Peak-to-peak Output Jitter for Clock channel	Pre-/De-emp = 0 dB Data Input = 6 Gbps HDMI Pattern, Clock input = 150 MHz		15	30	ps
$T_{Jit\text{-}Data}$	Peak-to-peak Output Jitter for Data channels			18	50	ps
t_{sx}	Select to switch Output				10	ns
t_{en}	Enable Time				200	ns
t_{dis}	Disable Time				10	ns

6.3.6 Signal Detector

Symbol	Parameter	Conditions	Min.	Typ.	Max.	Units
Vth+	Assert Threshold of Signal Detector	Signal swing @ 3GHz	130		210	mVppd
Vth-	De-assert Threshold of Signal Detector	Signal swing @ 100 MHz	30		110	mVppd

© Diodes Incorporated

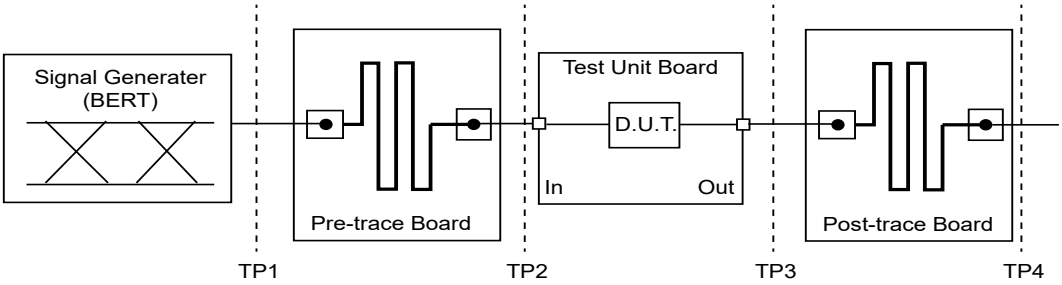

Figure 6-1 Electrical parameter test setup

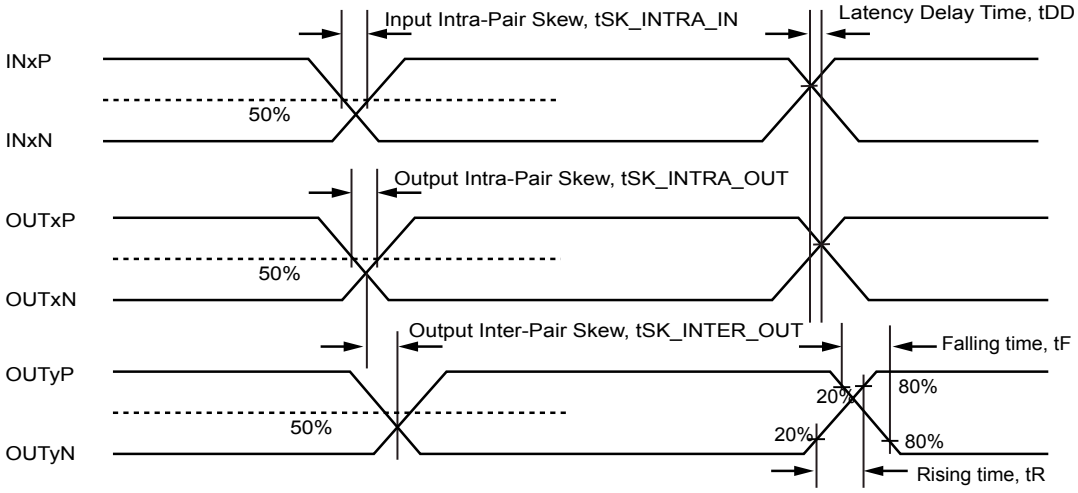

Figure 6-2 Intra and Inter-pair Differential Skew definition

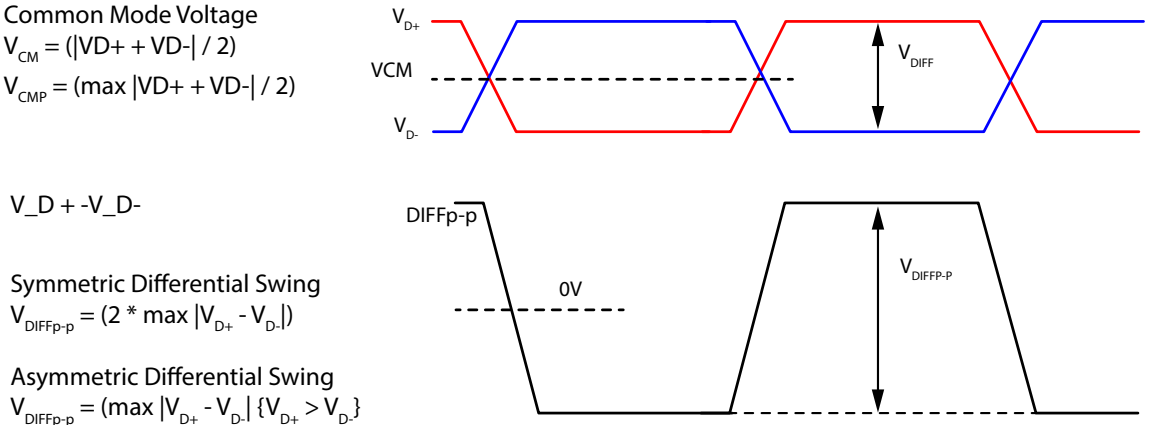

Figure 6-3 Definition of Peak-to-peak Differential voltage

© Diodes Incorporated

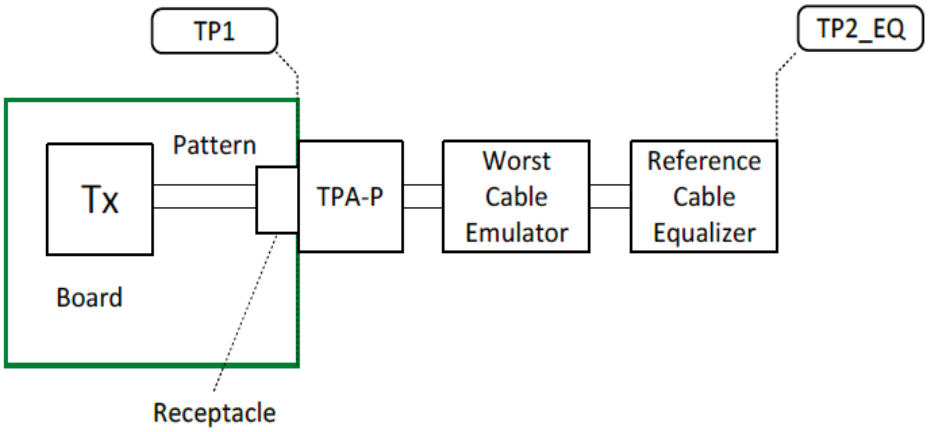

Figure 6-4 HDMI Source Test Point for Eye Diagram

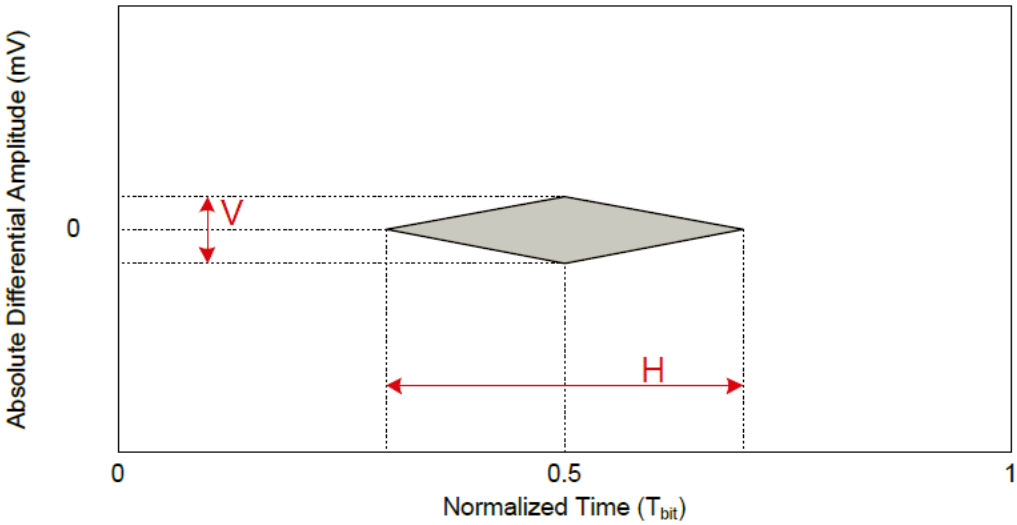

Figure 6-5 HDMI Sink Test Point for Eye Diagram

© Diodes Incorporated

6.4 I2C Bus

Symbol	Parameter	Conditions	Min.	Typ.	Max	Units
VDD	Nominal Bus Voltage		3.0		3.6	V
Freq	Bus Operation Frequency				400	kHz
V_{IH}	DC input logic high		$V_{DD}/2$ + 0.7		V_{DD} + 0.3	V
V_{IL}	DC input logic low		-0.3		$V_{DD}/2$ - 0.7	V
V_{OL}	DC output logic low	I_{OL} = 3mA			0.4	V
Ipullup	Current Through Pull-Up Resistor or Current Source	High Power specification	3.0		3.6	mA
Ileak-bus	Input leakage per bus segment		-200		200	uA
Ileak-pin	Input leakage per device pin			-15		uA
CI	Capacitance for SDA/SCL				10	pF
tBUF	Bus Free Time Between Stop and Start condition		1.3			us
tHD:STA	Hold time after (Repeated) Start condition. After this period, the first clock is generated.	At pull-up, Max	0.6			us
TSU:STA	Repeated start condition setup time		0.6			us
TSU:STO	Stop condition setup time		0.6			us
THD:DAT	Data hold time		0			ns
TSU:DAT	Data setup time		100			ns
tLOW	Clock low period		1.3			us
tHIGH	Clock high period		0.6		50	us
tF	Clock/Data fall time				300	ns
tR	Clock/Data rise time				300	ns
tPOR	Time in which a device must be operation after power-on reset				500	ms

Note:
(1) Recommended maximum capacitance load per bus segment is 400pF.
(2) Compliant to I2C physical layer specification.
(3) Ensured by Design. Parameter not tested in production.

© Diodes Incorporated

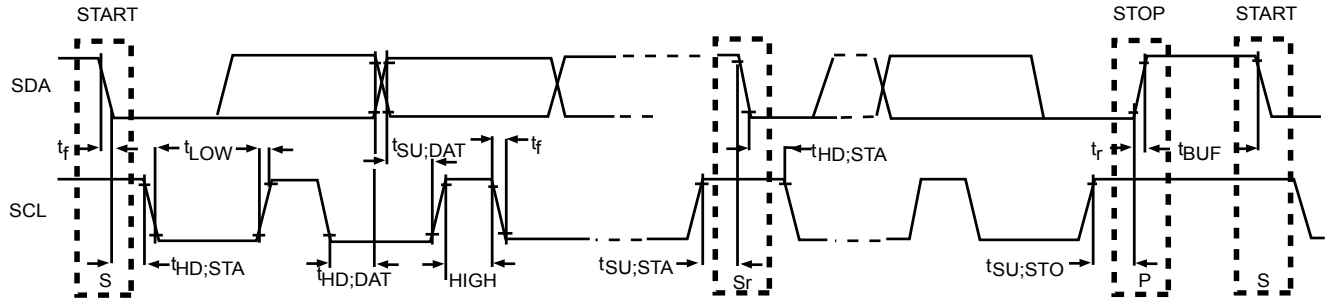

Figure 6-6 I2C Timing Diagram

© Diodes Incorporated

7. Application/Implementation

Note

Information in the following applications sections is not part of the component specification, and does not warrant its accuracy or completeness. Customers are responsible for determining suitability of components for their purposes. Customers should validate and test their design implementation to confirm system functionality.

7.1 Source Application

PI3HDX1204B1 is designed to accept AC-coupled as well as DC-coupled main link signals. When a dual-mode DP source is connected to the input of PI3HDX1204B1 in a source application, AC coupling capacitors must be placed at the input side.

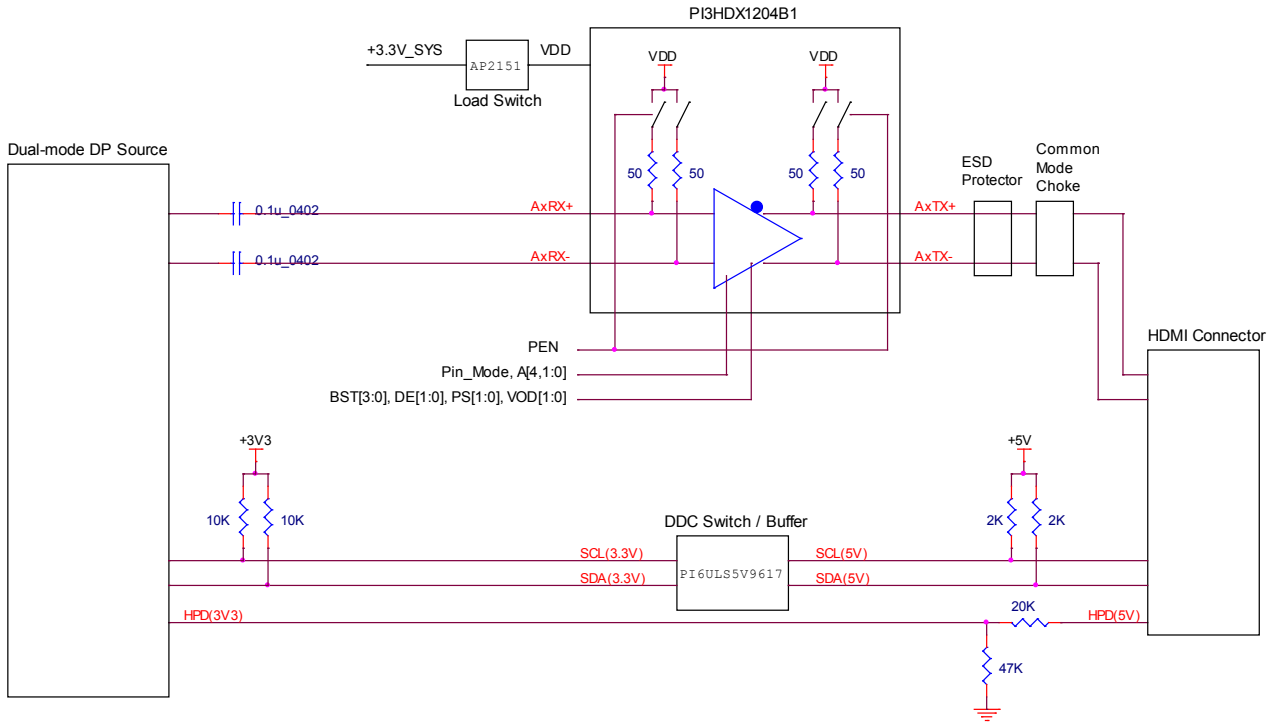

Figure 7-1 PI3HDX1204B1 Source Application Circuit

7.1.1 ESD Protectors on Output TMDS

As 8kV contact ESD is commonly required, ESD protectors are implemented at the output TMDS pins of PI3HDX1204B1 for source application. ESD8104 HDMI2.0 ESD protector can be considered to protect the 3.3V TMDS paths as its reverse working voltage is 3.3V.

7.1.2 Extra Component for Rise/fall Time Control

Per HDMI2.0 specification, rise/fall time of TMDS clock is kept at minimal 75ps while that of TMDS data is decreased to minimal 42.5ps if data rate is between 3.4Gbps and 6Gbps.

© Diodes Incorporated

Table 7-3 Source TMDS Electrical - 6G – T_{RISE}, T_{FALL} Requirements

Reference	Requirement
[HDMI 2.0: Table 6-2] AC Characteristics for 3.4 Gbps < R_{bit} ≤ 6.0 Gbps at TP1	Rise/Fall time: Data (20% to 80%): ≥42.5 ps Rise/Fall time: Clock (20% to 80%): ≥75 ps

Figure 7-2 HDMI2.0 Trise/fall Requirement

PI3HDX1204B1 is designed to meet the rise/fall time of TMDS data. If output trace length is short, maybe 1" only, common-mode choke or external inductor can be considered for slowing down the rise/fall time for TMDS clock of PI3HDX1204B1.

7.1.3 Leakage Blockage for VOFF Test

When performing VOFF test specified in HDMI 1.4a Compliance Test Specification, each output TMDS of PI3HDX1204B1 will be pulled to 3.3V via an external 50kΩ resistor. In this case, current will pass through an internal ESD protector at the output TMDS pin of PI3HDX1204B1 and leakage will be found at VCC pin of PI3HDX1204B1.

Recommended Test Method **Test ID 7-3: TMDS – VOFF**

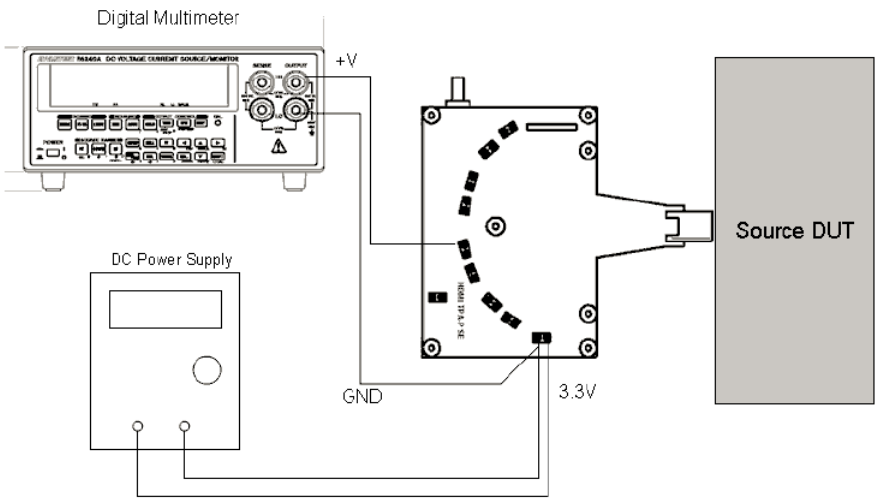

Figure 7-3 HDMI VOFF Test Setup

Test ID 7-3: TMDS – V_{OFF}	
Reference	**Requirement**
[HDMI: Table 4-23] Source DC Characteristics at TP1	TMDS single-ended standby (off) output voltage, V_{OFF} must be within AVcc ±10mVolts.

Figure 7-4 HDMI VOFF Requirement

To avoid this leakage, AP2151A power switch can be employed between the main 3.3V supply on a system and the VCC power plane of PI3HDX1204B1. Below is an example borrowed from an evaluation board schematic.

© Diodes Incorporated

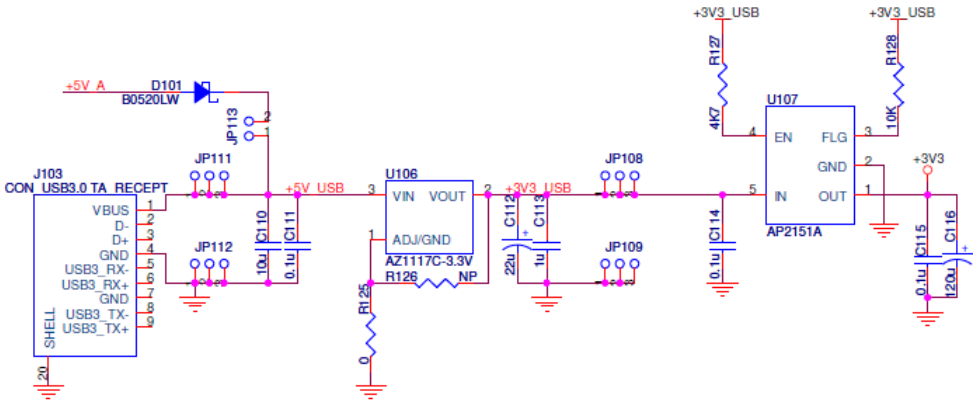

Figure 7-5 Power Distribution Switch Example

7.2 Sink Application

PI3HDX1204B1 can also be employed in a sink application as it offers a range of equalization setting.

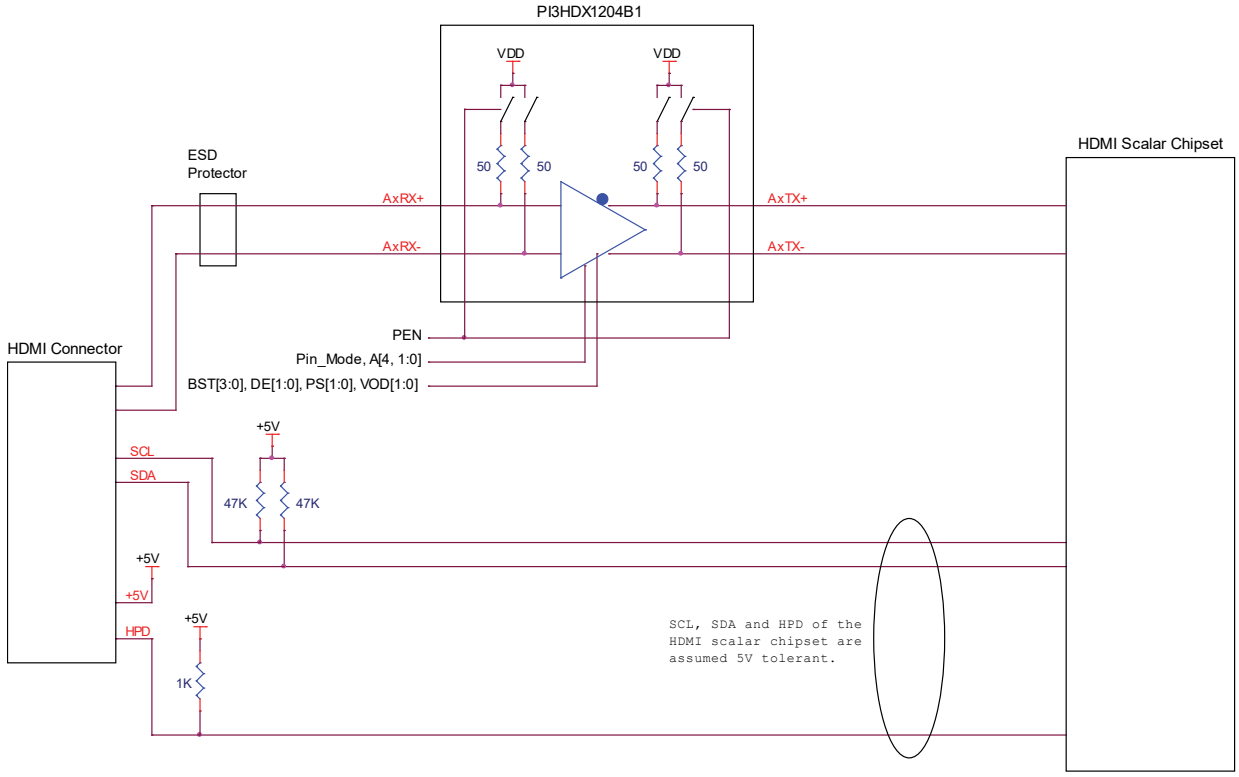

Figure 7-6 PI3HDX1204B1 Sink Application Circuit

7.2.1 ESD Protectors on Output TMDS

ESD protector selection guidance for source and sink applications is the same.

© Diodes Incorporated

7.3 DC/AC-coupled Application

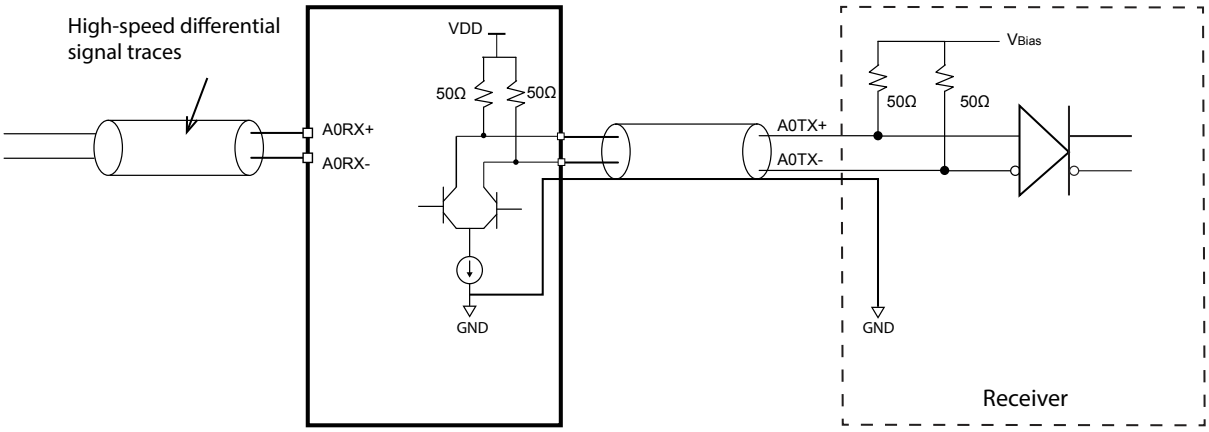

DC-Coupled Differential Signaling Application Circuits

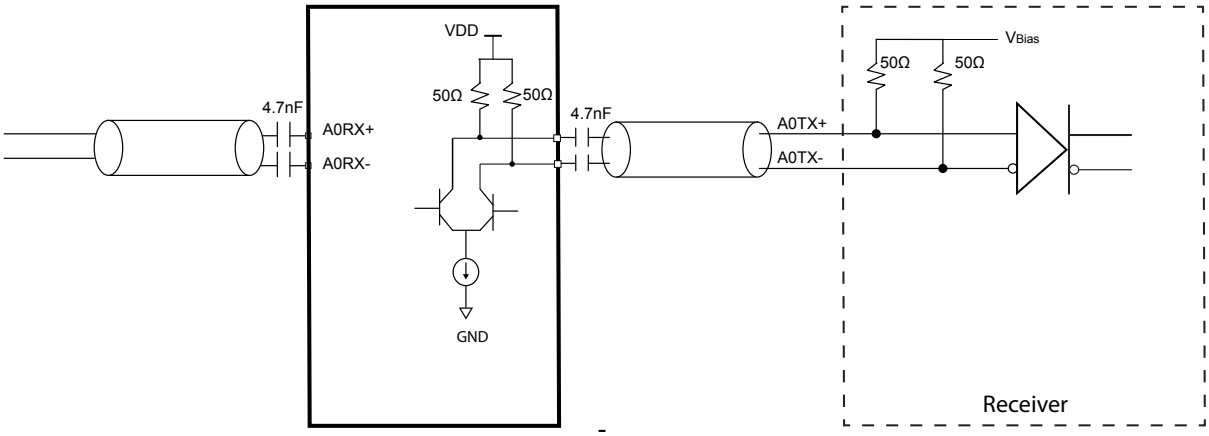

AC-Coupled Differential Signaling Application Circuits

Figure 7-7 DC/AC-coupled application diagram

© Diodes Incorporated

7.4 Product Layout Guideline

7.4.1 AC Coupling Capacitor

Below is an example of placing AC coupling capacitors on high-speed channels

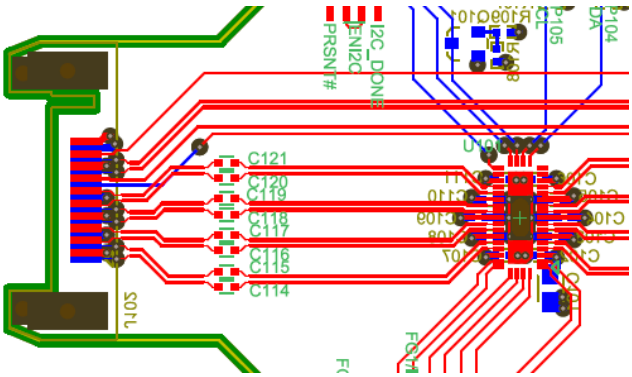

Figure 7-8 AC Coupling Capacitor Placement

7.4.2 Output Trace Length

To fulfill minimal 75ps rise/fall time requirement of TMDS clock, 1.5 – 4.5” TMDS trace length between PI3HDX1204B1 and HDMI connector for source application is recommended. This trace length varies with PCB trace width, characteristics of common-mode choke/ESD protector and connector quality. If trace width is 5 mil, 2.7 – 3.3” is recommended. Isolation space should be larger than 5 mil to minimize the crosstalk so thus jitter. Below is the PI3HDX1204B1 placement on its evaluation board.

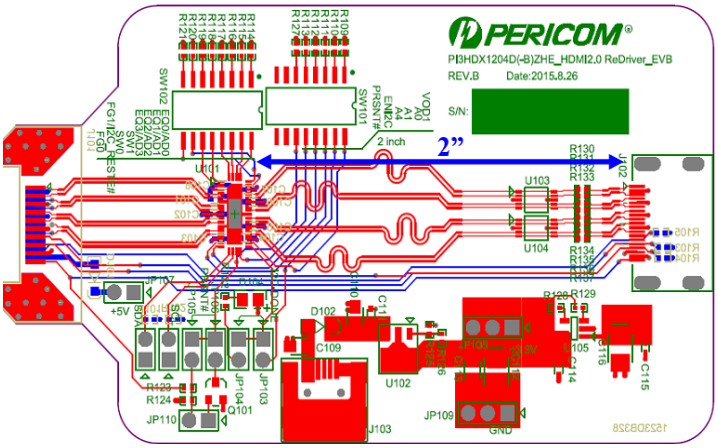

Figure 7-9 Source-side placement near to the HDMI connectors

7.4.3 Differential Impedance (TDR)

Layout guideline especially for high-speed transmission is critical. Please refer to PI3DPxxx_PI3HDxxx_Layout Guideline for detailed recommendations. Differential impedance test is required for both source and sink applications per HDMI 2.0 specification.

© Diodes Incorporated

Table 7-17 Source TMDS Electrical - 6G – Differential Impedance Requirements

Reference	Requirement
[HDMI 2.0: Table 6-3] Source Impedance Characteristics for (3.4 Gbps < R_{bit} ≤ 6.0 Gbps) at TP1	Through Connection ImpedanceΔ: 100 Ω +/- 15%◊ ◊ single excursion is permitted out to a max/min of 100 Ω +/- 25% and of a duration less than 250 ps. Δ Impedance from TP1 to Source Termination Source Termination Impedance: 75 to 150 Ω

Figure 7-10 HDMI2.0 Differential Impedance Requirement for Source Application

Table 8-7 Sink TMDS Electrical - 6G – Differential Impedance Requirements

Reference	Requirement
[HDMI 2.0: Table 6-8] Sink Impedance Characteristics for (3.4 Gbps < R_{bit} ≤ 6.0 Gbps) at TP2	Through Connection ImpedanceΔ: 100 Ω +/- 15%◊ ◊ A single excursion is permitted out to a max/min of 100 Ω ±25% and of duration less than 250 ps. Δ Impedance from TP2 to Sink Termination Sink Termination Impedance: 90 Ω to 110 Ω

Figure 7-11 HDMI2.0 Differential Impedance Requirement for Sink Application

The PCB impedance immediately before and after an ESD protector must be adjusted to compensate the capacitance loading of the ESD protector. Below is an example designing RClampe0544M in PI3HDX1204B1 evaluation board. Trace impedances before and after the ESD protector are tuned to compensate the capacitance of RClamp0544M. Semtech's layout guideline is followed.

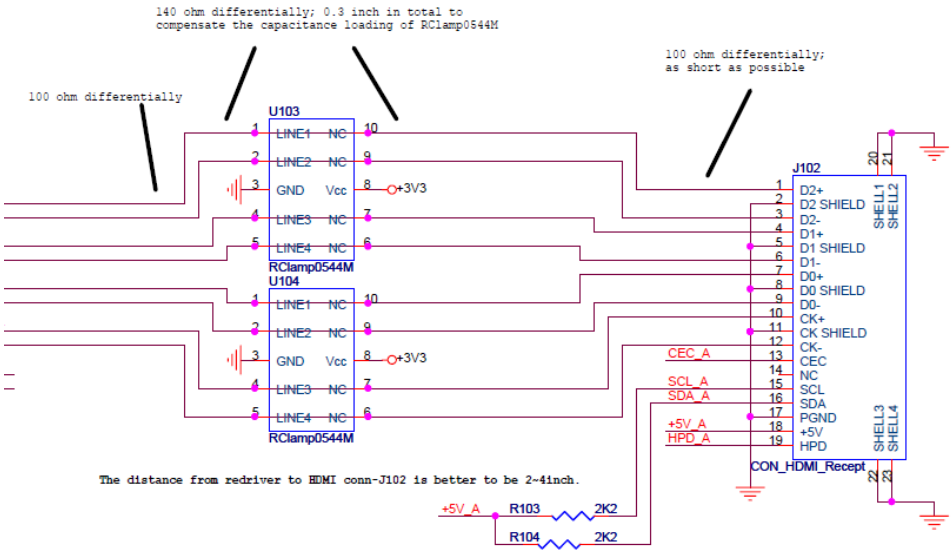

Figure 7-12 ESD Protector on PI3HDX1204B1 Source EVB

© Diodes Incorporated

7.4.4 GND via on the thermal pad area

Several GND via are “MUST” required on thermal area. The via size is 12/24 mil. Below is the thermal pad via layout recommendation.

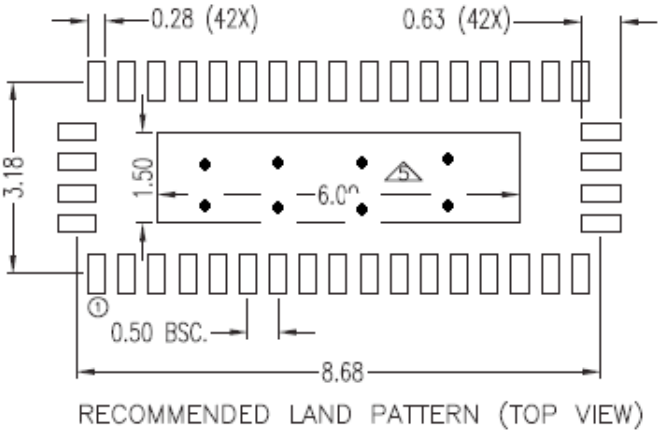

Figure 7-13 Recommended Land patterns

© Diodes Incorporated

7.5 General Layout Guideline

As transmission data rate increases rapidly, any flaws and/or mis-matches on PCB layout are amplified in terms of signal integrity. Layout guideline for high-speed transmission is highlighted in this application note.

7.5.1 Power and Ground

To provide a clean power supply for Pericom high-speed device, few recommendations are listed below:

- Power (VDD) and ground (GND) pins should be connected to corresponding power planes of the printed circuit board directly without passing through any resistor.
- The thickness of the PCB dielectric layer should be minimized such that the VDD and GND planes create low inductance paths.
- One low-ESR 0.1uF decoupling capacitor should be mounted at each VDD pin or should supply bypassing for at most two VDD pins. Capacitors of smaller body size, i.e. 0402 package, is more preferable as the insertion loss is lower. The capacitor should be placed next to the VDD pin.
- One capacitor with capacitance in the range of 4.7uF to 10uF should be incorporated in the power supply decoupling design as well. It can be either tantalum or an ultra-low ESR ceramic.
- A ferrite bead for isolating the power supply for Pericom high-speed device from the power supplies for other parts on the printed circuit board should be implemented.
- Several thermal ground vias must be required on the thermal pad. 25-mil or less pad size and 14-mil or less finished hole are recommended.

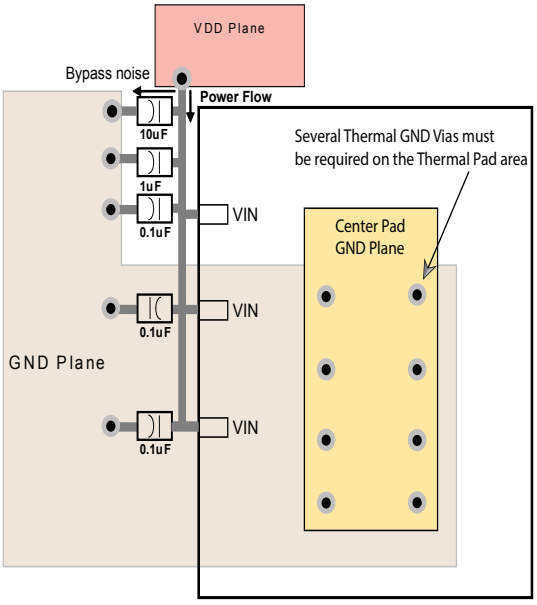

Figure 7-14 Decoupling Capacitor Placement Diagram

7.5.2 High-speed signal Routing

Well-designed layout is essential to prevent signal reflection:

- For 90Ω differential impedance, width-spacing-width micro-strip of 6-7-6 mils is recommended; for 100Ω differential impedance, width-spacing-width micro-strip of 5-7-5 mils is recommended.
- Differential impedance tolerance is targeted at ±15%.

© Diodes Incorporated

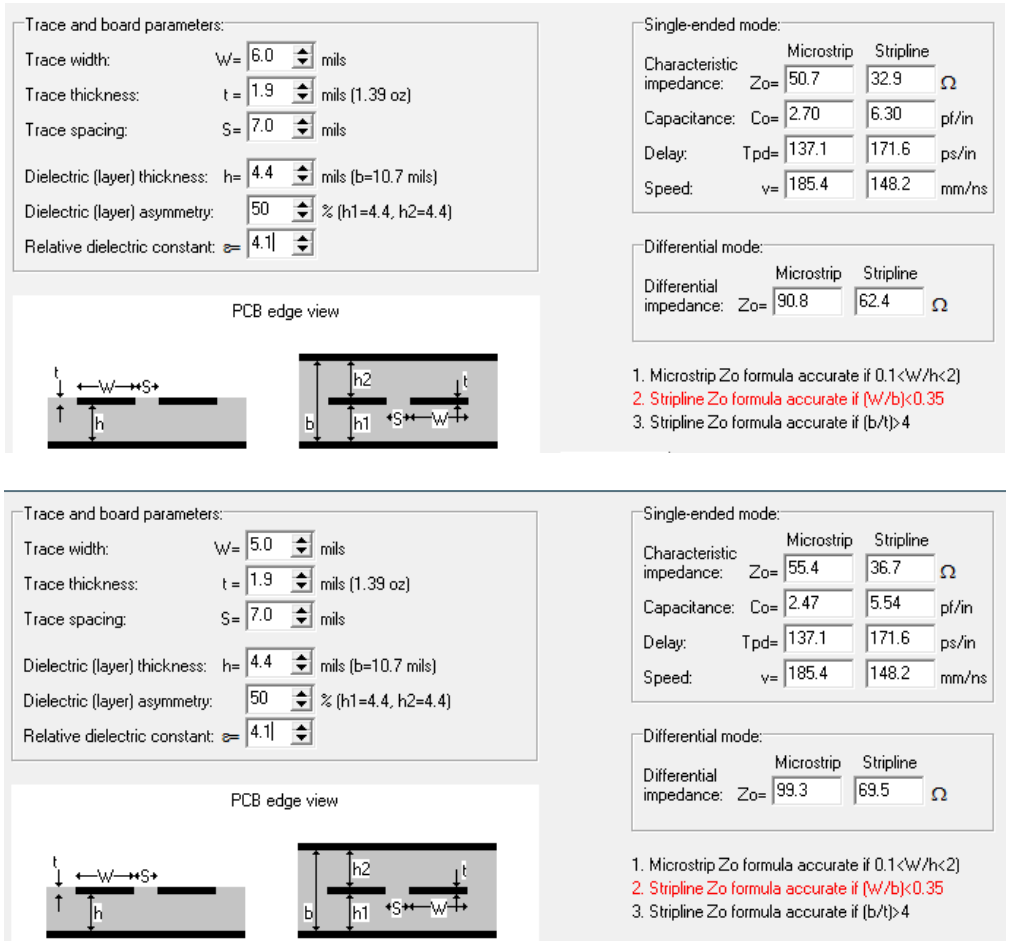

Figure 7-15 Trace Width and Clearance of Micro-strip and Strip-line

- For micro-strip, using 1/2oz Cu is fine. For strip-line in 6+ PCB layers, 1oz Cu is more preferable.

© Diodes Incorporated

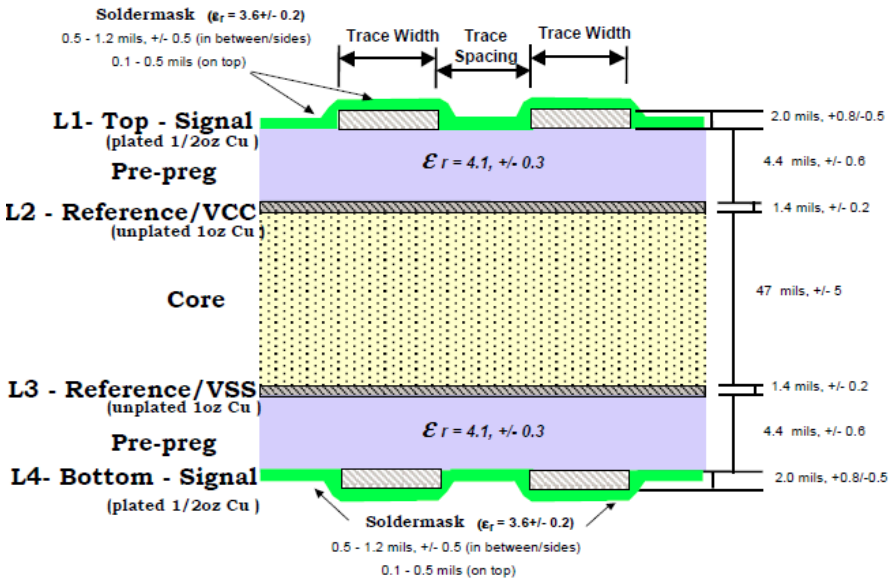

Figure 7-16 4-Layer PCB Stack-up Example

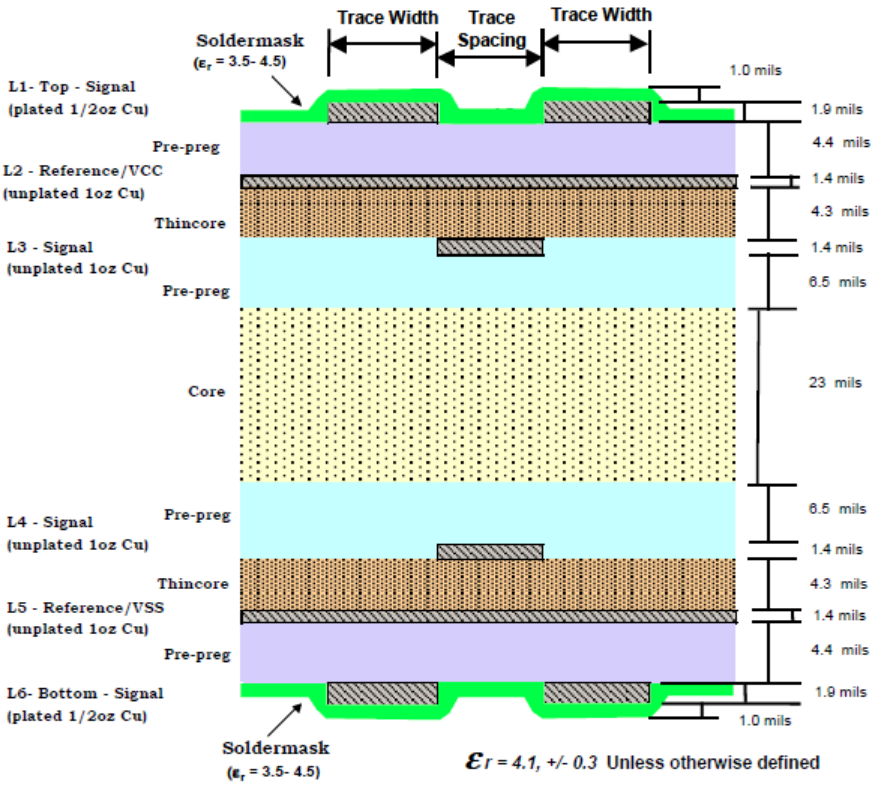

Figure 7-17 6-Layer PCB Stack-up Example

© Diodes Incorporated

- Ground referencing is highly recommended. If unavoidable, stitching capacitors of 0.1uF should be placed when reference plane is changed.

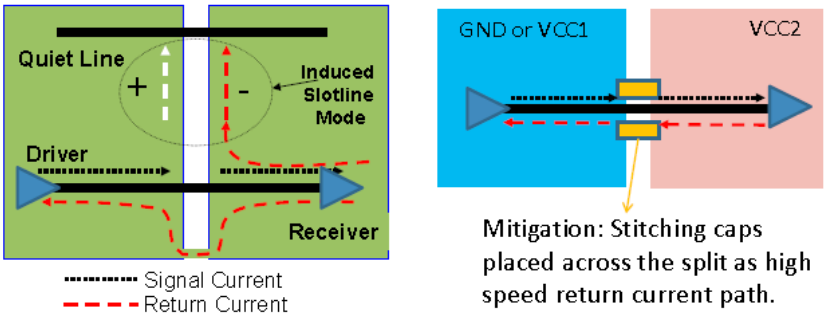

Figure 7-18 Stitching Capacitor Placement

- To keep the reference unchanged, stitching vias must be used when changing layers.
- Differential pair should maintain symmetrical routing whenever possible. The intra-pair skew of micro-strip should be less than 5 mils.

- To keep the reference unchanged, stitching vias must be used when changing layers.
- Differential pair should maintain symmetrical routing whenever possible. The intra-pair skew of micro-strip should be less than 5 mils.

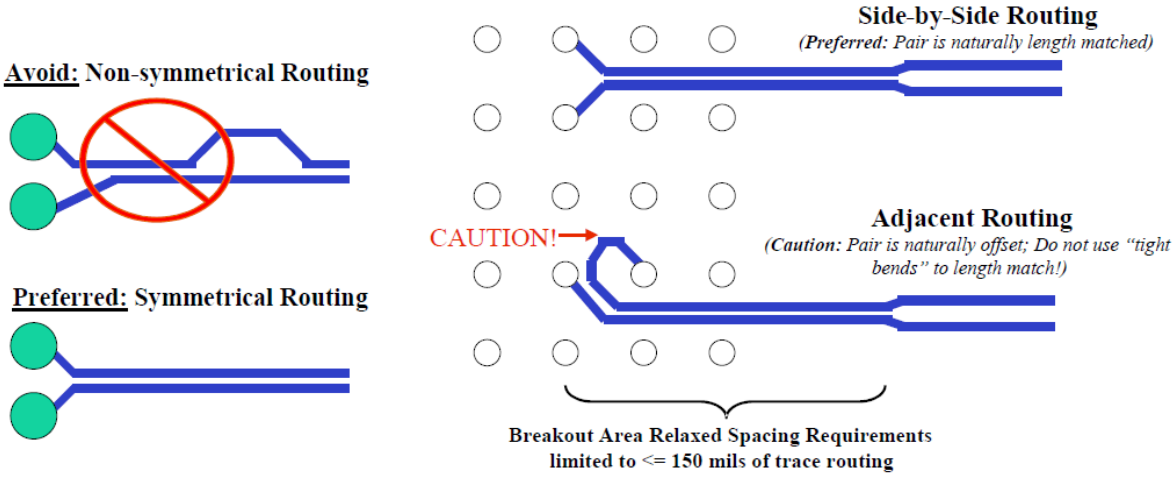

Figure 7-19 Layout Guidance of Matched Differential Pair

- For minimal crosstalk, inter-pair spacing between two differential micro-strip pairs should be at least 20 mils or 4 times the dielectric thickness of the PCB.
- Wider trace width of each differential pair is recommended in order to minimize the loss, especially for long routing. More consistent PCB impedance can be achieved by a PCB vendor if trace is wider.
- Differential signals should be routed away from noise sources and other switching signals on the printed circuit board.
- To minimize signal loss and jitter, tight bend is not recommended. All angles α should be at least 135 degrees. The inner air gap A should be at least 4 times the dielectric thickness of the PCB.

© Diodes Incorporated

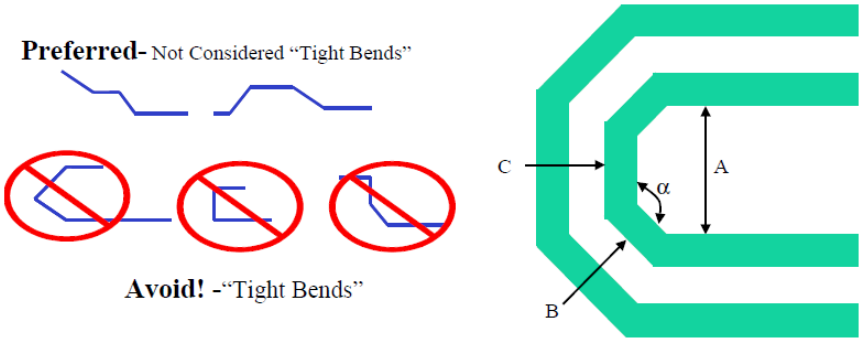

Figure 7-20 Layout Guidance of Bends

- Stub creation should be avoided when placing shunt components on a differential pair.

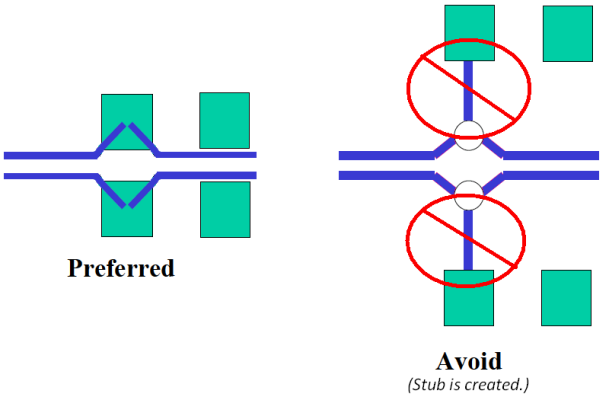

Figure 7-21 Layout Guidance of Shunt Component

- Placement of series components on a differential pair should be symmetrical.

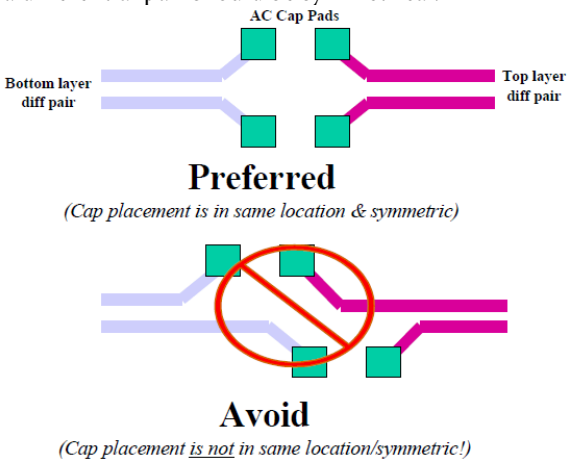

Figure 7-22 Layout Guidance of Series Component

- Stitching vias or test points must be used sparingly and placed symmetrically on a differential pair.

© Diodes Incorporated

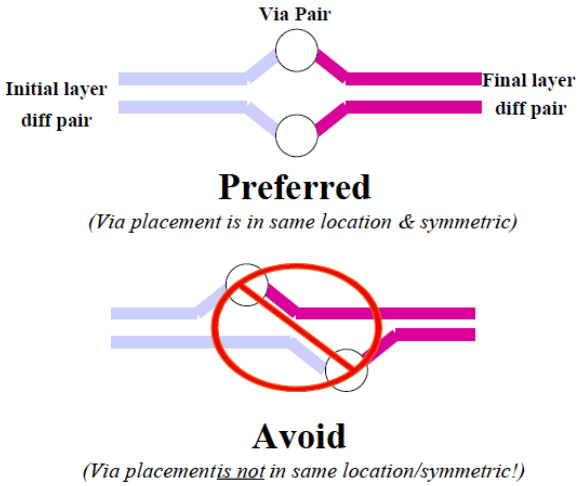

Figure 7-23 Layout Guidance of Stitching Via

© Diodes Incorporated

7.6 CTS Test Report

7.6.1 HDMI 2.0 Compliance Test Set-up

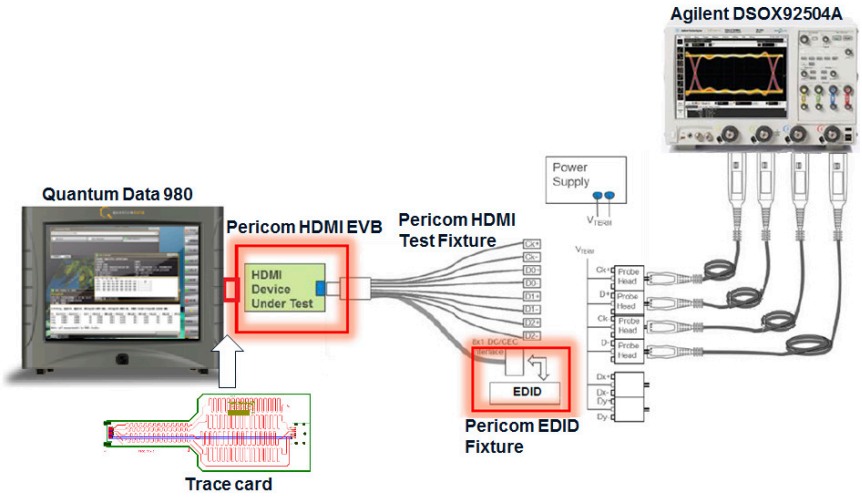

Figure 7-24 HDMI 2.0 CTS test setup

Note: Application Trace Card Information for CTS test

HDMI FR4 trace	0 in	6 in	12 in	18 in	24 in	30 in	36 in
Insertion loss @ 6Gbps	-5.91 dB	-9.75 dB	-10.47 dB	-13.05 dB	-15.87 dB	-16.97 dB	-21.20 dB

© Diodes Incorporated

7.6.2 HDMI 2.0 Compliance Report

Test Summary

Index	Test Name	Lanes	Spec Range	Meas Value	Result
1	7-9 : Source Clock Jitter	CK	Clock Jitter < 0.25*Tbit;	0.061*Tbit	Pass
2	7-10 : Source Eye Diagram	CK - D0	Data Jitter < 0.3*Tbit;	0.06*Tbit	Pass
3	7-10 : Source Eye Diagram	CK - D1	Data Jitter < 0.3*Tbit;	0.07*Tbit	Pass
4	7-10 : Source Eye Diagram	CK - D2	Data Jitter < 0.3*Tbit;	0.07*Tbit	Pass
5	7-6 : Source Inter-Pair Skew	D0 - D1	Skew < 0.2*TPixel;	0*TPixel	Pass
6	7-6 : Source Inter-Pair Skew	D1 - D2	Skew < 0.2*TPixel;	0.006*TPixel	Pass
7	7-6 : Source Inter-Pair Skew	D2 - D0	Skew < 0.2*TPixel;	0.006*TPixel	Pass
8	7-4 : Source Rise Time	CK	75.00ps < TRISE;	171.37ps	Pass
9	7-4 : Source Rise Time	D0	75.00ps < TRISE;	149.40ps	Pass
10	7-4 : Source Rise Time	D1	75.00ps < TRISE;	145.49ps	Pass
11	7-4 : Source Rise Time	D2	75.00ps < TRISE;	150.62ps	Pass
12	7-4 : Source Fall Time	CK	75.00ps < TFALL;	170.68ps	Pass
13	7-4 : Source Fall Time	D0	75.00ps < TFALL;	148.94ps	Pass
14	7-4 : Source Fall Time	D1	75.00ps < TFALL;	142.33ps	Pass
15	7-4 : Source Fall Time	D2	75.00ps < TFALL;	144.95ps	Pass
16	7-8 : Max Duty Cycle	CK	Max Duty Cycle < 60.0%;	50.79%	Pass
17	7-8 : Min Duty Cycle	CK	40.0% < Min Duty Cycle;	49.6%	Pass
18	7-2 : Source Low Amplitude +(Supported Sink <= 165MHz)	CK+	2.700V < VL < 2.900V;	2.8600V	Pass
19	7-2 : Source Low Amplitude +(Supported Sink <= 165MHz)	D0+	2.700V < VL < 2.900V;	2.8475V	Pass
20	7-2 : Source Low Amplitude -(Supported Sink <= 165MHz)	CK-	2.700V < VL < 2.900V;	2.8425V	Pass
21	7-2 : Source Low Amplitude -(Supported Sink <= 165MHz)	D0-	2.700V < VL < 2.900V;	2.8475V	Pass
22	7-2 : Source Low Amplitude +(Supported Sink <= 165MHz)	D1+	2.700V < VL < 2.900V;	2.8250V	Pass
23	7-2 : Source Low Amplitude +(Supported Sink <= 165MHz)	D2+	2.700V < VL < 2.900V;	2.8650V	Pass
24	7-2 : Source Low Amplitude -(Supported Sink <= 165MHz)	D1-	2.700V < VL < 2.900V;	2.8275V	Pass
25	7-2 : Source Low Amplitude -(Supported Sink <= 165MHz)	D2-	2.700V < VL < 2.900V;	2.8650V	Pass
26	7-7 : Source Intra-Pair Skew	CK	Skew < 0.15*Tbit;	0.015*Tbit	Pass
27	7-7 : Source Intra-Pair Skew	D0	Skew < 0.15*Tbit;	0.021*Tbit	Pass
28	7-7 : Source Intra-Pair Skew	D1	Skew < 0.15*Tbit;	0.007*Tbit	Pass
29	7-7 : Source Intra-Pair Skew	D2	Skew < 0.15*Tbit;	0.051*Tbit	Pass

© Diodes Incorporated

8. Mechanical/Packaging Information

8.1 Mechanical

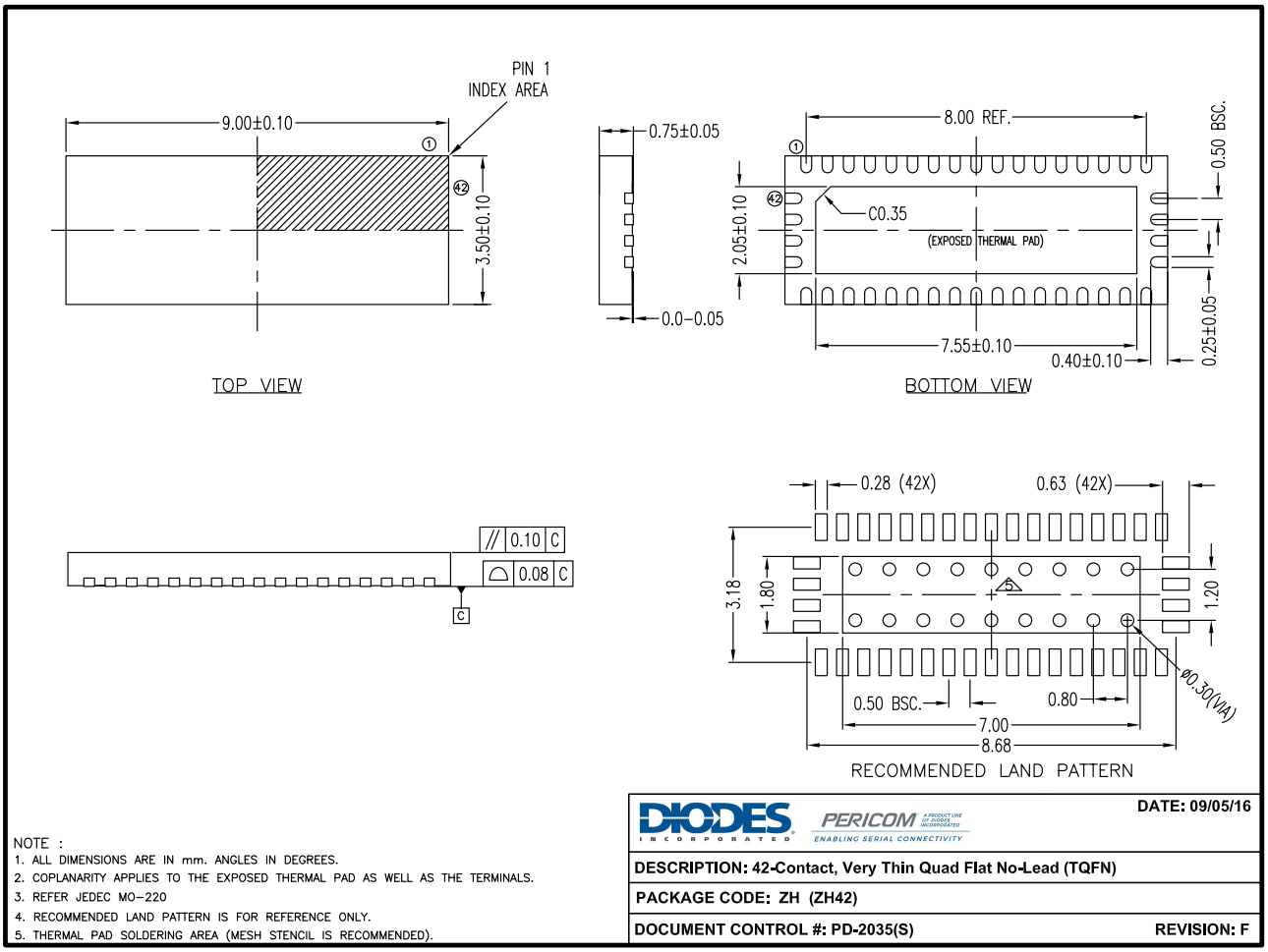

Note:
(1) For latest package info, please check: http://www.pericom.com/support/packaging/packaging-mechanicals-and-thermal-characteristics/

© Diodes Incorporated

8.2 Part Marking Information

Our standard product mark follows our standard part number ordering information, except for those products with a speed letter code. The speed letter code mark is placed after the package code letter, rather than after the device number as it is ordered. After electrical test screening and speed binning has been completed, we then perform an "add mark" operation which places the speed code letter at the end of the complete part number.

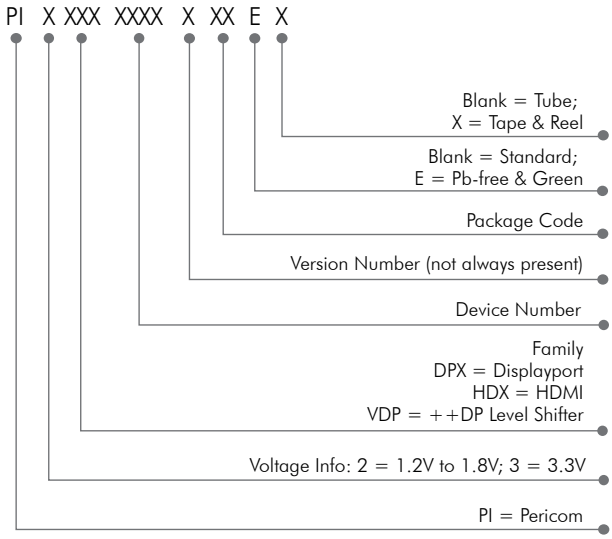

Figure 8-1 Device Naming Information

PI: Pericom
3HDX: 3.3V HDMI Product Family
1204B1: Part Number
ZH: Package Code
E: Pb-Free and Green
YY: Year
WW: Workweek
1st X: Assembly Code
2nd X: Fab Code

Figure 8-2 Device Marking Information

8.3 Tape & Reel Materials and Design

Carrier Tape

The Pocketed Carrier Tape is made of Conductive Polystyrene plus Carbon material (or equivalent). The surface resistivity is 10^6Ohm/sq. maximum. Pocket tapes are designed so that the component remains in position for automatic handling after cover tape is removed. Each pocket has a hole in the center for automated sensing if the pocket is occupied or not, thus facilitating device removal. Sprocket holes along the edge of the center tape enable direct feeding into automated board assembly equipment. See Figures 3 and 4 for carrier tape dimensions.

© Diodes Incorporated

Cover Tape

Cover tape is made of Anti-static Transparent Polyester film.The surface resistivity is 10^7Ohm/Sq. Minimum to 10^{11}Ohm sq. maximum. The cover tape is heat-sealed to the edges of the carrier tape to encase the devices in the pockets. The force to peel back the cover tape from the carrier tape shall be a MEAN value of 20 to 80gm (2N to 0.8N).

Reel

The device loading orientation is in compliance with EIA-481, current version (Figure 2). The loaded carrier tape is wound onto either a 13-inch reel, (Figure 4) or 7-inch reel. The reel is made of Antistatic High-Impact Polystyrene. The surface resistivity 10^7Ohm/sq. minimum to 10^{11}Ohm/sq. max.

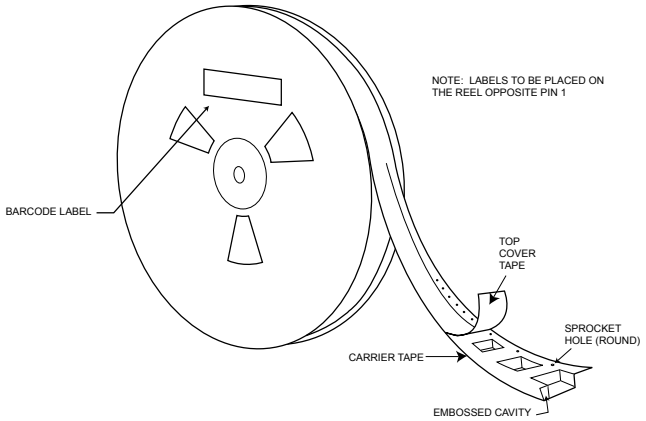

Figure 8-3 Tape & Reel label information

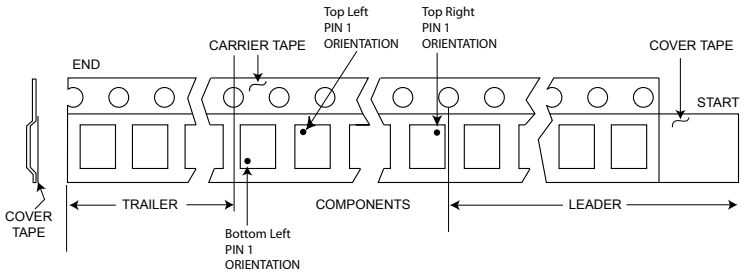

Figure 8-4 Tape leader and trailer pin 1 orientation

© Diodes Incorporated

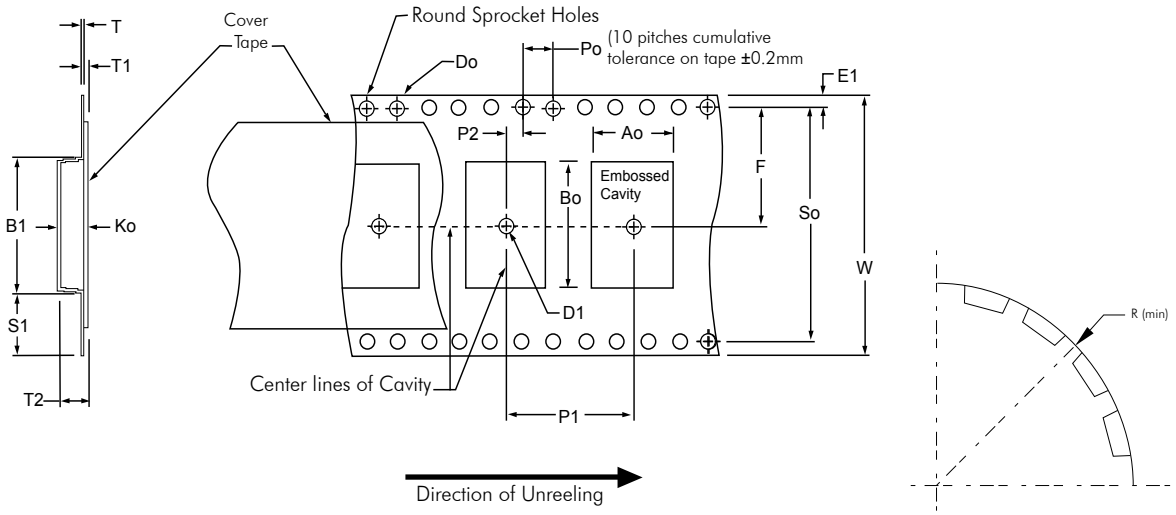

Figure 8-5 Standard embossed carrier tape dimension

© Diodes Incorporated

Constant Dimensions

Tape Size	D0	D1 (Min)	E1	P0	P2	R (See Note 2)	S1 (Min)	T (Max)	T1 (Max)
8mm	1.5 +0.1 -0.0	1.0	1.75 ± 0.1	4.0 ± 0.1	2.0 ± 0.05	25	0.6	0.6	0.1
12mm		1.5				30			
16mm					2.0 ± 0.1				
24mm									
32mm		2.0				50	N/A (See Note 3)		
44mm					2.0 ± 0.15				

Variable Dimensions

Tape Size	P_1	B_1 (Max)	E_2 (Min)	F	So	T_2 (Max.)	W (Max)	A_0, B_0, & K_0
8mm	Specific per package type. Refer to FR-0221 (Tape and Reel Packing Information) or visit www.pericom.com/pdf/gen/tapereel.pdf	4.35	6.25	3.5 ± 0.05	N/A (see note 4)	2.5	8.3	See Note 1
12mm		8.2	10.25	5.5 ± 0.05		6.5	12.3	
16mm		12.1	14.25	7.5 ± 0.1		8.0	16.3	
24mm		20.1	22.25	11.5 ± 0.1		12.0	24.3	
32mm		23.0	N/A	14.2 ± 0.1	28.4± 0.1		32.3	
44mm		35.0	N/A	20.2 ± 0.15	40.4 ± 0.1	16.0	44.3	

NOTES:
(1) A0, B0, and K0 are determined by component size. The cavity must restrict lateral movement of component to 0.5mm maximum for 8mm and 12mm wide tape and to 1.0mm maximum for 16,24,32, and 44mm wide carrier. The maximum component rotation within the cavity must be limited to 20o maximum for 8 and 12 mm carrier tapes and 10o maximum for 16 through 44mm.
(2) Tape and components will pass around reel with radius "R" without damage.
(3) S1 does not apply to carrier width ≥32mm because carrier has sprocket holes on both sides of carrier where Do≥S1.
(4) So does not exist for carrier ≤32mm because carrier does not have sprocket hole on both side of carrier.

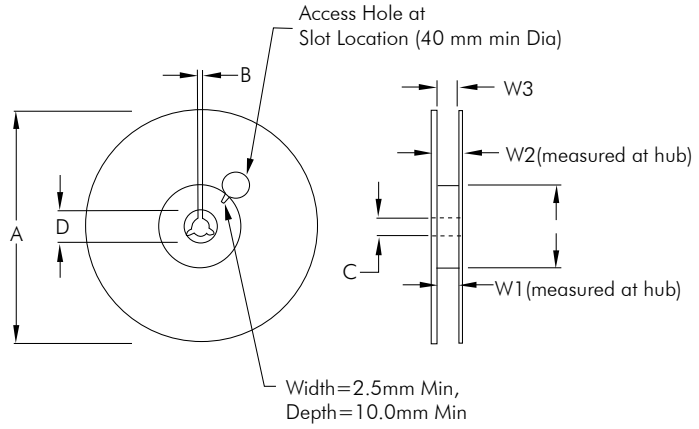

© Diodes Incorporated

Reel dimensions by tape size

Tape Size	A	N (Min) (1)	W1	W2(Max)	W3	B (Min)	C	D (Min)
8mm	178±2.0mm or 330±2.0mm	60 ±2.0mm or 100±2.0mm	8.4 +1.5/-0.0 mm	14.4 mm	Shall Accom-modate Tape Width Without Interference	1.5mm	13.0 +0.5/-0.2 mm	20.2mm
12mm			12.4 +2.0/-0.0 mm	18.4 mm				
16mm	330±2.0mm	100 ±2.0mm	16.4 +2.0/-0.0 mm	22.4 mm				
24mm			24.4 +2.0/-0.0 mm	30.4 mm				
32mm			32.4 +2.0/-0.0 mm	38.4 mm				
44mm			44.4 +2.0/-0.0 mm	50.4 mm				

NOTE:
(1) If reel diameter A=178 ±2.0mm, then the corresponding hub diameter (N(min) will by 60 ±2.0mm. If reel diameter A=330±2.0mm, then the corresponding hub diameter (N(min)) will by 100±2.0mm.

© Diodes Incorporated

8. Important Notice

DIODES INCORPORATED MAKES NO WARRANTY OF ANY KIND, EXPRESS OR IMPLIED, WITH REGARDS TO THIS DOCUMENT, INCLUDING, BUT NOT LIMITED TO, THE IMPLIED WARRANTIES OF MERCHANTABILITY AND FITNESS FOR A PARTICULAR PURPOSE (AND THEIR EQUIVALENTS UNDER THE LAWS OF ANY JURISDICTION).

Diodes Incorporated and its subsidiaries reserve the right to make modifications, enhancements, improvements, corrections or other changes without further notice to this document and any product described herein. Diodes Incorporated does not assume any liability arising out of the application or use of this document or any product described herein; neither does Diodes Incorporated convey any license under its patent or trademark rights, nor the rights of others. Any Customer or user of this document or products described herein in such applications shall assume all risks of such use and will agree to hold Diodes Incorporated and all the companies whose products are represented on Diodes Incorporated website, harmless against all damages. Diodes Incorporated does not warrant or accept any liability whatsoever in respect of any products purchased through unauthorized sales channel.

Should Customers purchase or use Diodes Incorporated products for any unintended or unauthorized application, Customers shall indemnify and hold Diodes Incorporated and its representatives harmless against all claims, damages, expenses, and attorney fees arising out of, directly or indirectly, any claim of personal injury or death associated with such unintended or unauthorized application.

Products described herein may be covered by one or more United States, international or foreign patents pending. Product names and markings noted herein may also be covered by one or more United States, international or foreign trademarks.

This document is written in English but may be translated into multiple languages for reference. Only the English version of this document is the final and determinative format released by Diodes Incorporated.

LIFE SUPPORT

Diodes Incorporated products are specifically not authorized for use as critical components in life support devices or systems without the express written approval of the Chief Executive Officer of Diodes Incorporated. As used herein:

A. Life support devices or systems are devices or systems which:
1. are intended to implant into the body, or
2. support or sustain life and whose failure to perform when properly used in accordance with instructions for use provided in the labeling can be reasonably expected to result in significant injury to the user.

B. A critical component is any component in a life support device or system whose failure to perform can be reasonably expected to cause the failure of the life support device or to affect its safety or effectiveness.

Customers represent that they have all necessary expertise in the safety and regulatory ramifications of their life support devices or systems, and acknowledge and agree that they are solely responsible for all legal, regulatory and safety-related requirements concerning their products and any use of Diodes Incorporated products in such safety-critical, life support devices or systems, notwithstanding any devices- or systems-related information or support that may be provided by Diodes Incorporated. Further, Customers must fully indemnify Diodes Incorporated and its representatives against any damages arising out of the use of Diodes Incorporated products in such safety-critical, life support devices or systems.

Copyright © 2016, Diodes Incorporated
www.diodes.com

--