AAVID THERMALLOY

PRODUCT DATASHEET

SynJet® Outdoor Electronics Cooler L100-90

SynJet cooling provides the most reliable thermal management solution available. This cooler has been developed by Aavid for cooling Industrial, Telecom, and other electronic systems.

- Cools up to 57 W[4]
- L10 of 100K Hours at 60°C
- Outdoor Rated (IP56)[7]
- 5 Yr Warranty
- Small Form Factor
- Quiet Acoustics

Specifications[1]

Thermal & Acoustic

SynJet Setting[2]	Θs-a[3] Al	TDP[4] (W) ΔT = 30°	SPL (dBA)[5]	Wire Connections	
High Performance	0.53	57	28	Red to +VDC Black & Blue to Ground	
Standard Performance	0.67	45	22	Red to +VDC Black only to Ground	
Silent Performance	0.82	36	18	Red to +VDC Black & Purple to Ground	
PWM at 100% duty cycle	0..53	57	28	Red to +VDC Black only to Ground Blue to PWM Signal	

Electrical

SynJet Setting[2]	Voltage (VDC) +/- 10%	Current (mA)[6]			Pavg (mW)	Voltage (VDC) +/- 10%	Current (mA)[6]			Pavg (mW)
		Imin	Iavg	Ipeak			Imin	Iavg	Ipeak	
High	5	20	180	360	0.90	12	10	92	184	1.10
Standard			80	160	0.40			46	92	0.55
Silent			60	120	0.30			33	66	0.40
PWM at 100% duty cycle			220	440	1.10			115	230	1.38

Environmental

All Settings	Min	Max	Units	Conditions
Operating Temperature	-40	70	°C	Air temperature surrounding cooler
Storage Temperature	-50	85	°C	Air temperature surrounding cooler
Storage Altitude		15K	m	Above sea level
Operating Relative Humidity	5	95	%	Non-condensing
Weight		540	g	SynJet with Al heat sink
Reliability		100K	hrs	L10 @ 60°C
Regulatory Compliance				RoHS, UL, FCC Part 15 Class B, CE

[1] All values are typical at 25ºC unless otherwise stated.
[2] The Level Select model should be used for discrete performance settings. Follow the instructions in the Product Design Guide for adjusting settings.
[3] Thermal resistance values are given as reference only and are measured in free air without airflow obstructions. Thermal resistance is measured from the bottom middle of the heat sink to ambient air measured at the inlet to the SynJet, with a heat source at least 15cm^2 using a reference heat sink. Actual thermal performance may vary by application and final product design should be tested to assure proper thermal performance.
[4] Thermal Design Power is based on a 30ºC temperature rise of heat sink mounting surface above ambient temperature around cooler.
[5] Sound Pressure Level is measured at 1 meter distance per ISO 7779.
[6] The SynJet has a time varying current. The current waveform is sinusoidal and the average current (Iavg) is used to calculate the average power consumption (Pavg) at nominal input voltage (VDC). See the Electrical section in the Product Design Guide for a detailed explanation.
[7] SynJet design guidelines for outdoor use must be followed to meet rated lifetime specifications.

Mechanical

SynJet Cooling Solution shown with Configurable heat sink

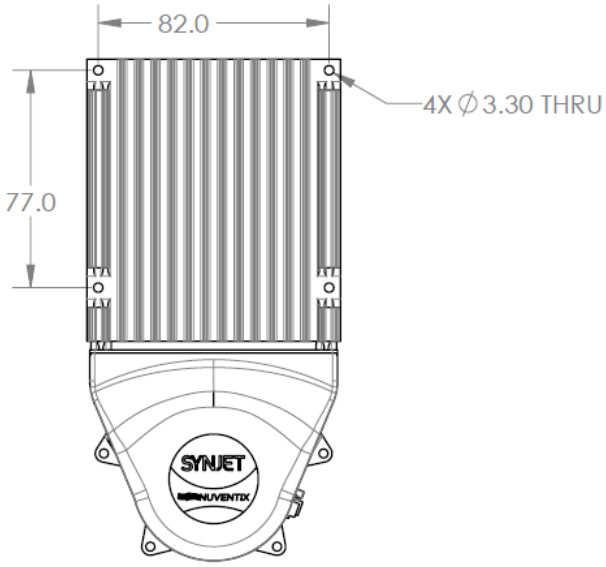

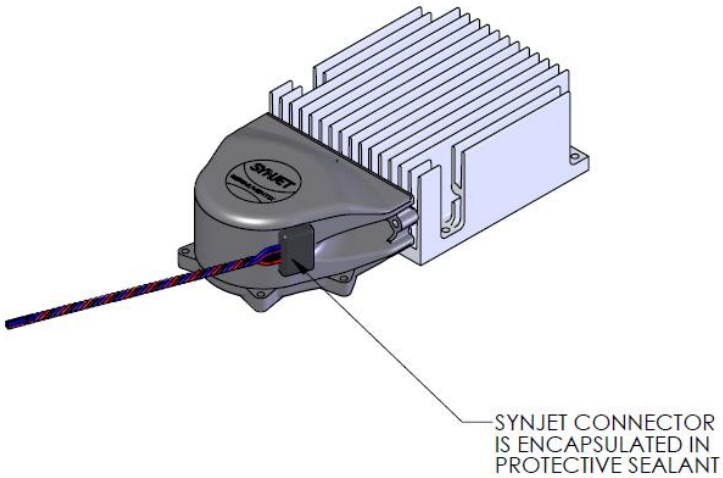

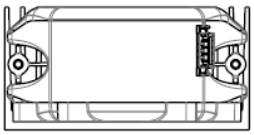

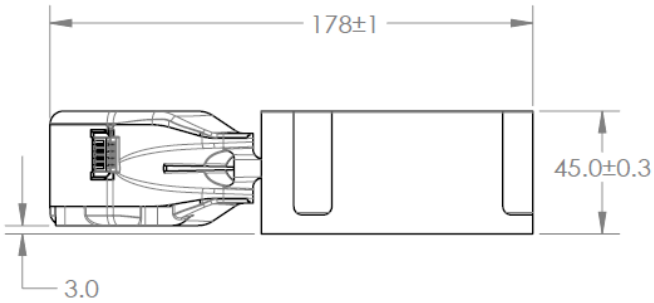

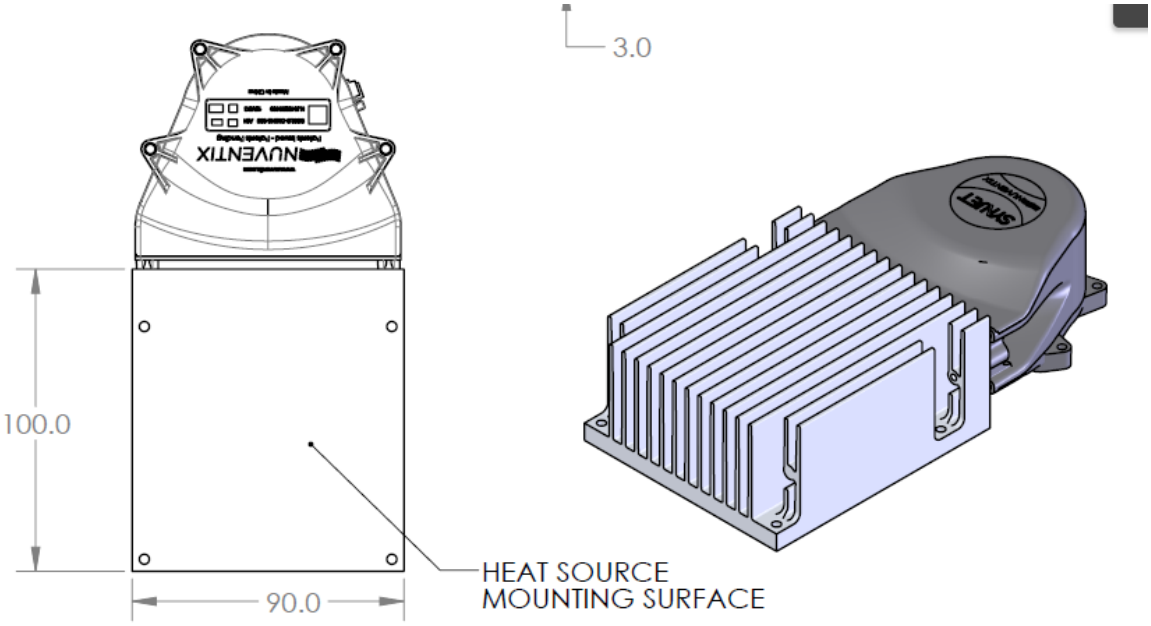

All dimensions are nominal and in mm unless otherwise stated. See product drawings for more detail.

SynJet Wire Harness

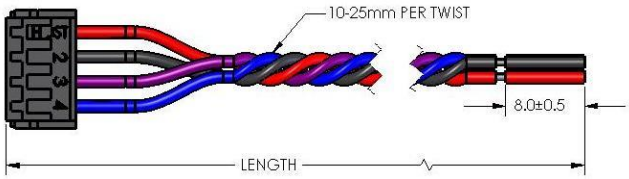

Connector Pinout

Pin	Wire Color	Symbol	Description
1	Red	+VDC	5 V or 12 V depending on model
2	Black	GND	Ground
3	Purple	CTRL2	Input for Level Select model Status signal for PWM model
4	Blue	CTRL1	Input for Level Select model PWM input for PWM model

IMPORTANT: SynJets should be completely wired to the power supply before the power supply is energized. The power supply should be turned off before the SynJet Cooler is disconnected. SynJet Coolers are not designed for “hot swap” or “hot plug” applications.

Part Numbers

Part Number	Description	Notes
NX202104	SynJet, XFlow 42, Outdoor, PWM, 5V, 600mm Wire Harness	Use with PWM input to control performance setting
NX202105	SynJet, XFlow 42, Outdoor, Level Select, 5V, 600mm Wire Harness	Configurable to discrete performance settings
NX202106	SynJet, XFlow 42, Outdoor, PWM, 12V, 600mm Wire Harness	Use with PWM input to control performance setting
NX202107	SynJet, XFlow 42, Outdoor, Level Select, 12V, 600mm Wire Harness	Configurable to discrete performance settings
NX302101	Heatsink, Electronics Cooler L100-90, Configurable, Black	Contact sales for other heatsink options

Aavid reserves the right to make changes to the products or information contained herein without notice. No liability is assumed as a result of their use or applications. For additional information, please contact Aavid directly.