Murata Power Solutions

NMD Series

Isolated 1W Twin Output DC/DC Converters

FEATURES

- RoHS compliant
- Twin independent outputs
- Input/output isolation 1kVDC
- Output/output isolation 1kVDC
- Power sharing on outputs
- Efficiency to 80%
- Power density 0.85W/cm³
- UL 94V-0 package material
- Footprint from 1.17cm²
- 5V & 12V input
- One 5V output (V1)
- 3.3V, 5V, 9V, 12V and 15V output (V2)
- No heatsink required
- Internal SMD construction
- Fully encapsulated with toroidal magnetics
- No external components required
- MTTF up to 1.6 million hours
- Custom solutions available
- PCB mounting

DESCRIPTION

The NMD series of DC/DC converters are ideally suited to applications where a potential difference exists between loads, e.g. motor control circuits. The twin outputs offer cost and space savings by consolidating two DC/DC converters into one package. All of the rated power may be drawn from a single output provided the total load does not exceed 1 watt.

RoHS COMPLIANT

For full details go to
www.murata-ps.com/rohs

SELECTION GUIDE

Order Code	Nominal Input Voltage	Output Voltage 1	Output Voltage 2	Output Current 1	Output Current 2	Efficiency	MTTF[1]	Package Style	
	V	V	V	mA	mA	%	kHrs		
NMD050505DC	5	5	5	100	100	70	1615	DIP	
NMD050509DC	5	5	9	100	56	80	669	DIP	
NMD050505SC	5	5	5	100	100	70	1615	SIP	
NMD050509SC	5	5	9	100	56	80	669	SIP	
NMD050512SC	5	5	12	100	42	80	339	SIP	
NMD050515SC	5	5	15	100	34	80	187	SIP	
NMD120509DC	12	5	9	100	56	80	343	DIP	
NMD120515DC	12	5	15	100	34	80	148	DIP	
NMD120509SC	12	5	9	100	56	80	343	SIP	
NMD120512SC	12	5	12	100	42	80	229	SIP	
NMD120515SC	12	5	15	100	34	80	148	SIP	
Not recommended for new designs									**Recommended Alternative**
NMD050503DC	5	5	3.3	100	152	70	1615	DIP	Contact Murata
NMD050512DC	5	5	12	100	42	80	339	DIP	NMD050512SC
NMD050515DC	5	5	15	100	34	80	187	DIP	NMD050515SC
NMD050503SC	5	5	3.3	100	152	70	1615	SIP	Contact Murata
NMD120505DC	12	5	5	100	100	70	489	DIP	Contact Murata
NMD120512DC	12	5	12	100	42	80	229	DIP	NMD120512SC
NMD120505SC	12	5	5	100	100	70	489	SIP	Contact Murata

When operated **with** additional external load capacitance the rise time of the input voltage will determine the maximum external capacitance value for guaranteed start up. The slower the rise time of the input voltage the greater the maximum value of the additional external capacitance for reliable start up.

INPUT CHARACTERISTICS

Parameter	Conditions	Min.	Typ.	Max.	Units
Voltage range	Continuous operation, 5V input types	4.5	5.0	5.5	V
	Continuous operation, 12V input types	10.8	12	13.2	

OUTPUT CHARACTERISTICS

Parameter	Conditions		Min.	Typ.	Max.	Units
Rated power[2]	T_A=0°C to 125°C				1.0	W
Voltage set point accuracy	See tolerance envelope					
Line regulation	NMD050503xC	High V_{IN} to Low V_{IN}		1.0	1.25	%/%
	All other variants			1.0	1.20	
Load regulation	10% load to rated load, 3.3V output types				15	%
	10% load to rated load, 5V output types				15	
	10% load to rated load, 9V output types				10	
	10% load to rated load, 12V output types				10	
	10% load to rated load, 15V output types				10	
Ripple and noise	BW=DC to 20MHz, all output types				75	mV p-p

ABSOLUTE MAXIMUM RATINGS

Short-circuit protection[3]	1 second
Lead temperature 1.5mm from case for 10 seconds	300°C
Input voltage V_{IN}, NMD05 types	7V
Input voltage V_{IN}, NMD12 types	15V

1. Calculated using MIL-HDBK-217F with nominal input voltage at full load.
2. See derating curve.
3. Supply voltage must be disconnected at the end of the short circuit duration.

All specifications typical at T_A=25°C, nominal input voltage and rated output current unless otherwise specified.

ISOLATION CHARACTERISTICS

Parameter	Conditions	Min.	Typ.	Max.	Units
Isolation test voltage	Flash tested for 1 second	1000			VDC
Resistance	Viso= 500VDC	1			GΩ

GENERAL CHARACTERISTICS

Parameter	Conditions	Min.	Typ.	Max.	Units
Switching frequency	All input types		100		kHz

TEMPERATURE CHARACTERISTICS

Parameter	Conditions	Min.	Typ.	Max.	Units
Specification	All output types	0		70	ºC
Storage		-55		150	
Cooling	Free air convection				

TEMPERATURE DERATING GRAPH

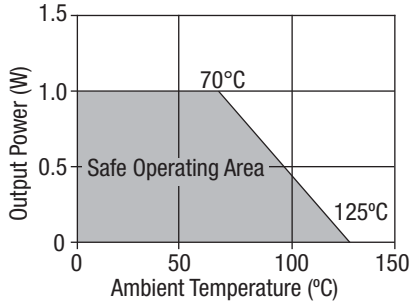

TOLERANCE ENVELOPE

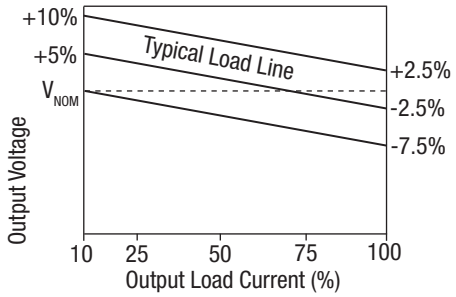

TECHNICAL NOTES

ISOLATION VOLTAGE

'Hi Pot Test', 'Flash Tested', 'Withstand Voltage', 'Proof Voltage', 'Dielectric Withstand Voltage' & 'Isolation Test Voltage' are all terms that relate to the same thing, a test voltage, applied for a specified time, across a component designed to provide electrical isolation, to verify the integrity of that isolation.

Murata Power Solutions NMD series of DC/DC converters are all 100% production tested at their stated isolation voltage. This is 1kVDC for 1 second.

A question commonly asked is, "What is the continuous voltage that can be applied across the part in normal operation?"

For a part holding no specific agency approvals, such as the NMD series, both input and output should normally be maintained within SELV limits i.e. less than 42.4V peak, or 60VDC. The isolation test voltage represents a measure of immunity to transient voltages and the part should never be used as an element of a safety isolation system. The part could be expected to function correctly with several hundred volts offset applied continuously across the isolation barrier; but then the circuitry on both sides of the barrier must be regarded as operating at an unsafe voltage and further isolation/insulation systems must form a barrier between these circuits and any user-accessible circuitry according to safety standard requirements.

REPEATED HIGH-VOLTAGE ISOLATION TESTING

It is well known that repeated high-voltage isolation testing of a barrier component can actually degrade isolation capability, to a lesser or greater degree depending on materials, construction and environment. The NMD series has toroidal isolation transformers, with no additional insulation between primary and secondary windings of enameled wire. While parts can be expected to withstand several times the stated test voltage, the isolation capability does depend on the wire insulation. Any material, including this enamel (typically polyurethane) is susceptible to eventual chemical degradation when subject to very high applied voltages thus implying that the number of tests should be strictly limited. We therefore strongly advise against repeated high voltage isolation testing, but if it is absolutely required, that the voltage be reduced by 20% from specified test voltage.

This consideration equally applies to agency recognized parts rated for better than functional isolation where the wire enamel insulation is always supplemented by a further insulation system of physical spacing or barriers.

RoHS COMPLIANCE INFORMATION

This series is compatible with RoHS soldering systems with a peak wave solder temperature of 300°C for 10 seconds. The pin termination finish on the SIP package type is Tin Plate, Hot Dipped over Matte Tin with Nickel Preplate. The DIP types are Matte Tin over Nickel Preplate. Both types in this series are backward compatible with Sn/Pb soldering systems.

For further information, please visit www.murata-ps.com/rohs

PACKAGE SPECIFICATIONS

MECHANICAL DIMENSIONS

DIP Package

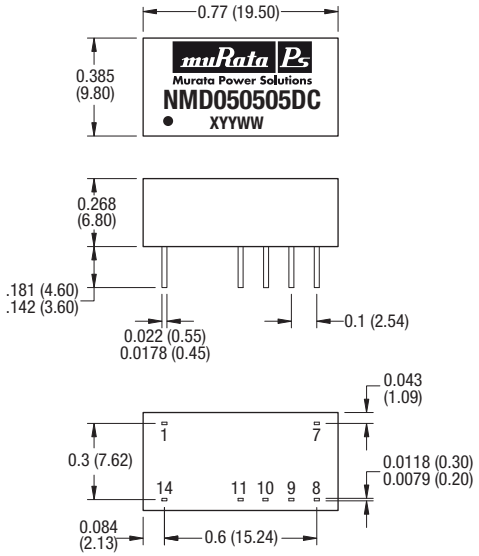

SIP Package

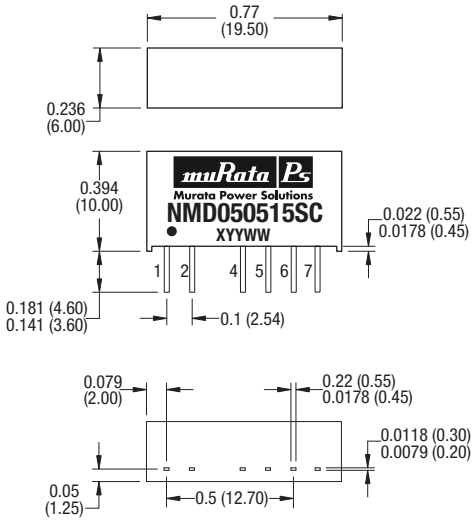

All dimensions in inches ±0.01 (mm ±0.25mm). All pins on a 0.1 (2.54) pitch and within ±0.01 (0.25) of true position.

Weight: 2.3g (DIP & SIP)

PIN CONNECTIONS - 14 PIN DIP

Pin	Function
1	$-V_{IN}$
7	NC
8	$-V_{OUT2}$
9	$+V_{OUT2}$
10	$-V_{OUT1}$
11	$+V_{OUT1}$
14	$+V_{IN}$

PIN CONNECTIONS - 7 PIN SIP

Pin	Function
1	$+V_{IN}$
2	$-V_{IN}$
4	$+V_{OUT1}$
5	$-V_{OUT1}$
6	$+V_{OUT2}$
7	$-V_{OUT2}$

PACKAGE SPECIFICATIONS (continued)

RECOMMENDED FOOTPRINT DETAILS

14 Pin DIP Package

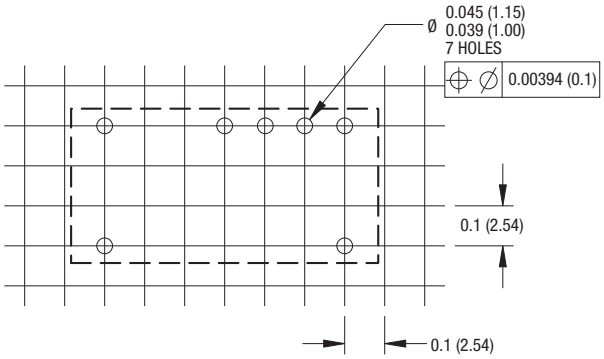

7 Pin SIP Package

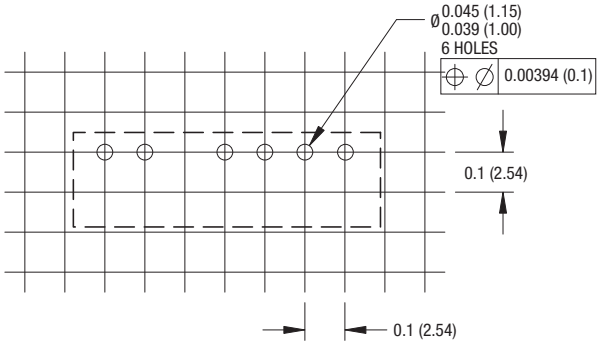

TUBE OUTLINE DIMENSIONS

14 Pin DIP Tube

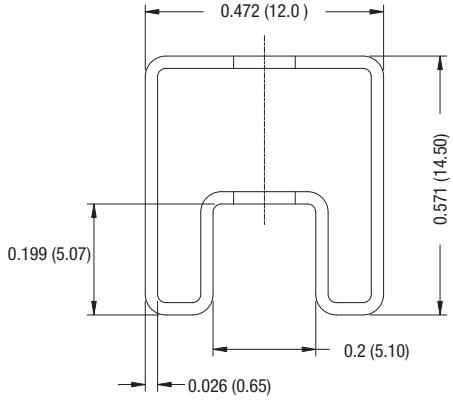

7 Pin SIP Tube

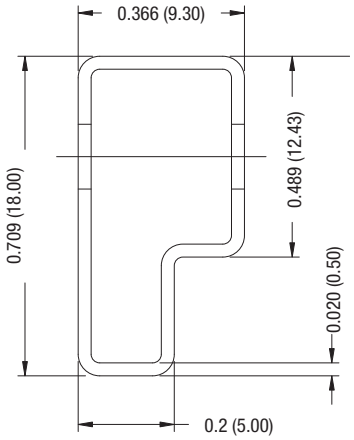

Unless otherwise stated all dimensions in inches (mm) ±0.5mm.
Tube length (14 Pin DIP) : 20.47 (520mm ±2mm).
Tube length (7 Pin SIP) : 20.47 (520mm ±2mm).

Tube Quantity : 25

Murata Power Solutions, Inc.
11 Cabot Boulevard, Mansfield, MA 02048-1151 U.S.A.
ISO 9001 and 14001 REGISTERED

This product is subject to the following operating requirements and the Life and Safety Critical Application Sales Policy:
Refer to: http://www.murata-ps.com/requirements/

Murata Power Solutions, Inc. makes no representation that the use of its products in the circuits described herein, or the use of other technical information contained herein, will not infringe upon existing or future patent rights. The descriptions contained herein do not imply the granting of licenses to make, use, or sell equipment constructed in accordance therewith. Specifications are subject to change without notice.
© 2012 Murata Power Solutions, Inc.