HEXSEAL® & E-SEEL®

Hermetic Environmental Sealing Boots for Switches & Potentiometers

APM HEXSEAL®

SWITCH SEALING SPECIALISTS

Table of Contents

Matching Colors Available

Armored Versions

EMI/RFI Suppression Versions

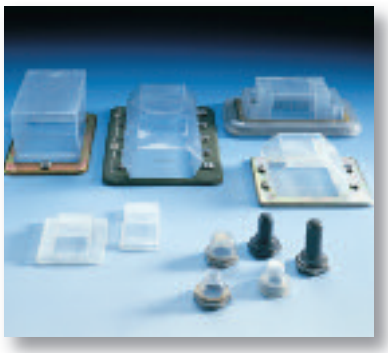

Circuit Breaker Boots –
See Catalog CB200

Why Hostile Switch Environments Need Protection 3

Typical Applications – Features & Benefits 4

Cross References 5, 6

N.S.N. Series to APM P/N & Military Specifications 6

Anatomy of a Hermetic Sealing Boot 7

3 Performance Levels to Choose From 7

Technical References 8, 9

Toggle Switch Boots Specifications & Selection (Full & Half) 10

IQ Series Toggle Switch Boots 10a

Armored Toggle Switch Boots (Full) 11

EMI/RFI Shielded Toggle Switch Boots (Full) 11

Back-of-Panel Mounted Toggle Switch Boots 11

Pushbutton Switch Boots (Full) 12, 13

Armored Pushbutton Switch Boots (Full) 13

EMI/RFI Shielded Pushbutton Boots (Full) 13

Back-of-Panel Mounted Pushbutton Switch Boots 13

Indicator & Illuminated Pushbutton Switch Boots 14

2-Way Radio Handset Switch Boots 14

Rotary-Shaft Seals for Switches & Potentiometers 15

EMI/RFI Shielded Rotary-Seals for Switches & Potentiometers 15

Locking Rotary-Shaft Seals 15

Sealed Switches Bushing Sealing Washers* 16

Rocker Switch Boots 17

Economy Switch Boots 18

Installation Instructions – Bushing Adaptors 19

Custom Capabilities 20

*Designed Specifically to Protect Mounting Hole Seal Integrity of Hermetically Sealed Switches

© APM Hexseal Corp. 2008

HEXSEAL® & E-SEEL® SEALING BOOTS – LIFE SUPPORT SYSTEMS FOR SWITCHES

Why hostile switch environment protection is needed

Unsealed switches are internally susceptible to damage and shorting from water, lubricants, dust, dirt, sand, salt spray, corrosive atmospheres, fungus and other damaging contaminants. Even factory sealed switch function is susceptible to ice and dust build-up. And, all switch panel-mounting cutouts are vulnerable to contaminant seepage including spilled soft drinks, coffee, etc. APM's UL-recognized HEXSEAL® and E-SEEL® sealing boots provide complete and reliable, cost-effective, long-term protection.

Toggle, Pushbutton, Rocker, Rotary Actuated Sealing Boots

How HEXSEAL® & E-SEEL® Boots protect

Working closely with switch, potentiometer and circuit breaker manufacturers and users for more than 60 years, APM has developed an extensive line of tough, pliant silicone rubber panel seals that function harmoniously with the switch's manual and automatic operation and position status viewing. Our panel seals are UL 50 tested and Recognized. In this age of recalls and expensive field servicing, installing a HEXSEAL boot is the most effective and least expensive way to protect and guard against switch, circuit breaker and potentiometer failures.

NEMA Mounted Enclosure Example – Switch & Circuit Breaker Boots

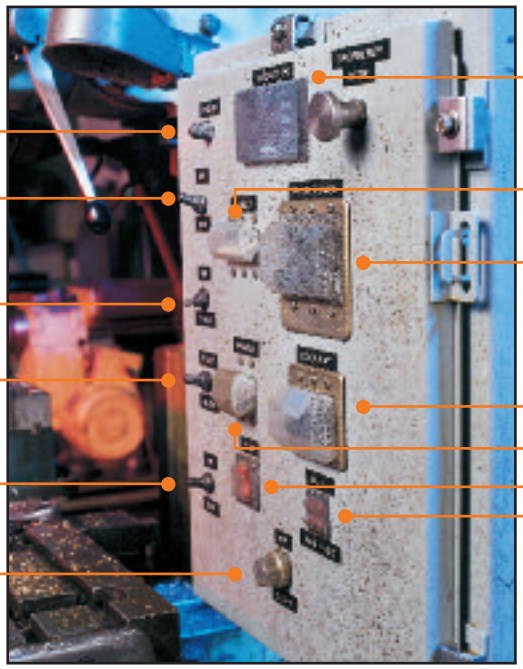

Color Matching

All standard EMI/RFI boots feature a knitted Monel shield

REMOTE HEXSEAL® boots protect switch, potentiometer & circuit breaker mechanisms from degradation due to harsh environments such as salt air/water, oils, dust and ice.

EXTREME HEXSEAL® boots will protect switches and keep them functioning to temperatures down to -94°F (-70°C).

Typical Applications

- Marine instrument panels
- Military equipment and vehicles
- Food processing equipment
- Air conditioning systems
- Heat pumps
- Off-road construction equipment
- Machine tool controls
- Spas/hot tubs
- Commercial laundry equipment
- Construction elevator controls
- Waste treatment system controls
- Chemical plant process controls
- Paint spraying equipment
- Industrial machinery
- Medical electronic equipment
- Ground support equipment
- Electronic/electrical instrument control panels
- Emergency power equipment
- Outdoor compressor/pump controls
- Transport refrigeration systems
- Automotive diagnostic equipment
- Lighting control centers
- Commercial refrigeration systems
- Or any application requiring environmental protection for switches.

Learn how others apply HEXSEAL® Switch Boots – visit our website "Sealing Solutions" application notes.

RUGGED HEXSEAL® boots are used for controls protection in industrial, manufacturing and processing plants — hostile conditions which are dusty, dirty, greasy and corrosive.

RELIABLE Surgery rooms and food processing plants require frequent wash downs. Their switches benefit from HEXSEAL® IP66-68 Rated boots by maintaining dry, clean reliable performance.

Features & Benefits

- **Exclusive UL-Recognized HEXSEAL® & E-SEEL® Boots** … facilitate easier "agency approval" of the equipment in which they are used. No other competitive seals in the world have these approvals.
- **Third party inspection** … UL regularly inspects our facilities and products.
- **Military Specifications** … most HEXSEAL® Boots are produced to meet MIL-B-5423 (see product pages specification charts).
- **Time Tested** … since our original patents and for more than 60 years, millions of HEXSEAL® Boots reliably function in hostile conditions throughout the world.
- **Transparent RUBRGLAS® (indicators) rugged silicone rubber material** … resists tearing and most hostile environmental contaminants. Retains tactile feel, will not discolor, yellow, crack or dry out due to UV/aging.
- **Choose precise boot color for color matching** … to match panel and/or delineate function – identification.
- **DFARS compliant**
- **RoHS compliant** … per document 2002/95/EC
- **Patented perimeter sealing rib** … seals the switch/circuit breaker panel-mounting cutout, preventing contaminant seepage.
- **Toggle actuated boots feature secondary inner seal** … to protect against contaminant entry in the event the upper chamber portion is punctured. And, also protects against differential pressure. (See figure 1.)
- **All toggle and pushbutton boots feature high-strength rubber-to-metal bond** … cross-linking adhesion assures rubber will not separate from the mounting nut.
- **Pre-lubricated (optional) half-toggle and full-toggle boots** … assure easier installation on large diameter actuators.
- **Designed and made in USA** … to insure high, consistent quality with local full tech service backup.
- **Custom design requirements welcome** … in addition to standard products described in this catalog, APM provides technical design assistance with fast, economical prototyping.

CROSS REFERENCES — UNSEALED SWITCHES

(Partial list — consult factory for additional listings for these and other manufacturers)

Toggle Switches

APM Hexseal P/N*	Carlingswitch	E-Switch	Cutler Hammer	Gaynor	Siemens	Airpax	Honeywell	ITT (C&K)	APEM	Eaton
Boots	**Toggle Switches**									
Your choice of... Full-toggle boot: (15/32-32 Thread) N1030 IN1030 IQ1030 C1131/27 C1131/28 ***or*** Half-toogle boot: (15/32-32 Thread) N1030B C1132/20	I & G Series with 52, 63, or 73 style toggle actuator F Series with 22, 62, 63, or 73 style toggle actuator H Series with 63 or 73 style toggle actuator C Series with 52 or 73 style toggle actuator 110/216 Series with 21, 22, 52, 63, / 73 style toggle actuator (Model Numbers: 110, 111, 112, 160, 216, 316, & 516) D Series DK/EK Series with 32, 72, or 73 style toggle actuator	100 Series W/T7 actuator 100 Series W/T8 actuator	8690K1/K2 73xxK Series through 76xxK Series 82xxK Series 83xxK Series	6600 Series 7000 Series 7100 Series 7200 Series 9000 Series 9100 Series 9200 Series	W31 Series	AP12 Series AP112 Series (Requires APM adt Bushing 2500/1/5, 15/32-32 to 3/8-32) B1/B2 Series (Snapak) (Requires APM boot with 1/2-32 threaded insert)	NT Series (Non-locking Actuator)	7000 -T & T1 Series (15/32-32 Thread) 9000 -T & T1 Series (15/32-32 Thread)	ST2 Series	8510 - 8512 Series 8520 - 8522 Series 8526 - 8528 Series 8566 - 8568 Series 8530 - 8532 Series 8533 - 8535 Series 8500 - 8502 Series 8570 - 8572 Series A3-200 Series A3-210 Series 8836 - 8838 Series 8843 - 8845 Series 8866 - 8869 Series

Locking Toggle Switches

APM Hexseal P/N*	Honeywell	Eaton
Boots	**Locking Toggle Switches**	
Locking Toggle Boots: (15/32-32 Thread) 1132/31 C1132/26	11TW1-2 Series 11TW1-3 Series 11TW1-8 Series 12TW1-2 Series 12TW1-3 Series 12TW1-8 Series 2LT1 Series	8536 - 8538 Series 8503 - 8505 Series 8573 - 8575 Series 8505A3-213 Series 8505A3-209 Series 8836 - 8838 Series 8843 - 8845 Series 8855 Series 8866 - 8869 Series

Rocker Switches

APM Hexseal P/N	Compatible with these Rocker Switch Manufacturers (Partial List)
C1111/7	Consult Factory
C1113/62	Arrow Hart – 2600 Series
C1113/63	Arrow Hart – 2600 Series
C1113/66	Carlingswitch #621
C1113/70	Carlingswitch RSC Series
C1113/71 C1113/80	Carlingswitch M Series Airpax R11 Eaton/Heinemann LC-1 Siemens W-33 Carling LTI6
C1113/75	Carlingswitch M Series Airpax R21 Eaton/Heinemann LC-2
C1213/53 C1213/60	Oslo S Series Oslo S Series

*For metric sizes consult factory.

DFARS Compliant

RoHS Compliant

Rotary Switches

APM Hexseal P/N*	Grayhill	Honeywell-Clarostat
Rotary Shaft Seals	**Rotary Switch Series**	
N9042x1/8 1/4-28 thd.	STD. 1/8 (.125) shaft 50 std, 51 std, 56 std., 26, 51	
N9030x1/4 3/8-32 thd. (M5423/09-02)	1/4 (.250) shaft 19, 24, 50,51, 5000, 71B, 71MB, 71BF, 71MBF, 62A, 62V, 62D, 62F, 62R, 61A, 61B, 61C, 61S (.250 shaft), 61K, 61R, 61Z, 25, 25L, 71 (.250 shaft), 42, 43, 44, 54, 53, 57, 59	1/4 (.250) shaft H - CL Series 73, 308, 309, 380C3, 600EN
N9030x1/8 3/8-32 thd. (M5423/09-01)		1/8 (.125) shaft 388L, RA10L, RA20L, RV4L, RV6L, 308L, 309L
N9040x1/8 1/4-32 thd. (M5423/09-03)	1/8 (.125) shaft 71A, 71MA, 71AF, 71MAF, 71BT, 61M, 61S (.125 shaft), 71 (.125 shaft), 08, 09	1/8 (.125) shaft 388N, 389N, 392, 308N, 309L, RA10N, RA20N, RV4N, RV6N
N9063x1/4 1/2-32 thd. (M5423/09-06)	1/4 (.250) shaft 63K, 63R	

Pushbutton Switches

APM Hexseal P/N*	Eaton		Carling	Gaynor	Siemens	NKK
Pushbutton Boots	**Pushbutton Switch Series**					
Pushbutton boots: (15/32-32 Thread or 7/16-28 Thread) NC3030, C1231/42	7835 K 12A, 7836 K 11B 8411/K7/K8/K12, 8418/K2/K12 8432, 8433, 7193/K101 8943/K28/K29, 8980/K202 7228K2, 7227K2, 7229K2		16-3P, 170/172 110/316P, 641	6611, 6612 6616, 6617 7000, 7100	W58 - 4 W58 - 1	MB2000 SB 265 SCB - 2A
Pushbutton boots: (15/32-32 Thread or 7/16-28 Thread) N3030 C1231/41	**Eaton**	**Carling**	**Siemens**	**Honeywell**	**APEM**	**C&K**
	8440 8411 K5/K13 8418 K1/K11 8448 K1/K2 8943 K28/K29	"P" P26 P27	W58 - 4 W58 - 1 W58 Series (15/32-32 Thread or 7/16-28 Thread)	2PB Series (15/32-32 Thread)	300 Series (With T1 option)	8500M 8500S 8500T

NOTE: 7/16-28 thread needs to be requested where required for proper fit. M12 thread needs to be requested where required for proper fit as well.

CROSS REFERENCES — UNSEALED SWITCHES

(Partial list — consult factory for additional listings for these and other manufacturers) (Continued)

Toggle Switches

APM Hexseal P/N*	Eaton	Carling	Gaynor	Siemens	NKK	Honeywell	APEM	ITT (C&K)
PUSHBUTTON BOOTS	Pushbutton Switch Series							
Pushbutton boots: (15/32-32 Thread or 7/16-28 Thread) NC3030 C1231/42	7835 K 12A, 7836 K 11B, 8411/K7/K8/K12, 8418/K2/K12, 8432, 8433, 7193/K101, 8943/K28/K29, 8980/K202, 7228K2, 7227K2, 7229K2	16-3P 170/172 110/316P 641	6611, 6612, 6616, 6617, 7000, 7100	W58 - 4 W58 - 1	MB2000 SB 265 SCB - 2A			
Pushbutton boots: (15/32-32 Thread or 7/16-28 Thread) N3030 C1231/41	8440 8411 K5/K13 8418 K1/K11 8448 K1/K2 8943 K28/K29	"P" P26 P27		W58 - 4, W58 - 1 W58 Series (15/32-32 Thread or 7/16-28 Thread)		2PB Series (15/32-32 Thread)	300 Series (With T1 option)	8500M 8500S 8500T

*For metric sizes consult factory.

SEALED SWITCHES

Panel Bushing Washer

APM Hexseal P/N	APEM	Honeywell	Eaton	ITT (C&K)
SEALING WASHERS	Sealed Toggle Switches			
Compatible Switch Bushing 15/32-32	ST1-1KM4 & M5 Series ST1-2KM4 & M5 Series ST1-3KM4 & M5 Series ST1-4KM4 & M5 Series ST1-5KM4 & M5 Series	11TW1-2 Series 11TW1-3 Series 11TW1-8 Series (With Suffex D, F, G)	8510 - 8512 Series 8520 - 8522 Series 8526 - 8528 Series 8566 - 85 68 Series 8530 - 85 32 Series 8536 - 85 38 Series 8533 - 8535 Series 8500 - 8502 Series 8503 - 8505 Series 8570 - 8572 Series 8573 - 8575 Sereis	7000 Series T and T1 Miniature Toggle Switches
60064 Diameter .677" Thickness .120"	ST2-1KM4 & M5 Series ST2-2KM4 & M5 Series ST2-3KM4 & M5 Series ST2-4KM4 & M5 Series ST2-5KM4 & M5 Series ST2-6KM4 & M5 Series ST2-7KM4 & M5 Series ST2-8KM4 & M5 Series	12TW1-2 Series 12TW1-3 Series 12TW1-8 Series (With Suffex D, F, G) 11ST Series 1TL1 Series 2TL1 Series 4TL1 Series	A3-209 Series A3-210 Series 8836 - 8838 Series 8843 - 8845 Series 8866 - 8869	
60225 Diameter .665" Thickness .110"				

Cross Reference
N.S.N. Series to APM Part Numbers

Series	Item Description
5305-	Self-Sealing Fasteners – Screws
5306-	Self-Sealing Fasteners – Bolts
5309-	Self-Sealing Fasteners – Bolts
5310-	Switch Sealing Boots
5320-	Self-Sealing Fasteners – Rivets
5325-	Switch Sealing Boots
5330-	Switch Sealing Boots
5340-	Circuit Breaker Boots
5925-	Circuit Breaker Boots
5930-	Switch Sealing Boots
5975-	Switch Sealing Boots
5999-	EMI/RFI Suppression Switch Sealing Boots
6210-	Incandescent Lamp Filters
6220-	Incandescent Lamp Filters

DFARS Compliant

RoHS Compliant

Meets Military Specifications**

Government Designation	APM Part Number	Government Designation	APM Part Number
M5423/01-01	N-1030	M5423/09-07	N9030 1/8 RF1
M5423/01-02	IN1030RFI	M5423/09-08	N9030 1/4 RF1
M5423/02-01	N-1030B	M5423/09-09	N9040 1/8 RF1
M5423/03-01	2030-B	M5423/09-10	N9060 1/4 RF1
M5423/04-01	N-5030	M5423/09-11	N9065 x 3/8 RF1
M5423/05-01	N-5030L	M5423/09-12	N9063 1/4 RF1
M5423/05-02	N-5030R	M5423/09-14	N9033 1/4 RF1
M5423/06-01	3070	M5423/10-01	N-5040G
M5423/06-02	3075	M5423/10-02	N-5040R
M5423/06-03	3073	M5423/10-03	N-5040
M5423/06-04	3077	M5423/11-01	N-5032B
M5423/07-01	N-3030	M5423/12-A9	1112/7
M5423/07-02	NC-3030	M5423/13-01	HE1076
M5423/07-03	NH-3030	M5423/13-02	HE1077
M5423/07-04	N-3040	M5423/13-03	HE1075/3
M5423/07-05	NH-3030S	M5423/14-01	HE1040
M5423/07-06	N-3030RFI	M5423/14-02	HE1035
M5423/07-07	NC-3030RFI	M5423/14-03	HE1070
M5423/07-08	NH-3030RFI	M5423/14-04	HE1080
M5423/07-09	N-3040RFI	M5423/14-05	HE1015
M5423/07-10	NH-3030SRFI	M5423/14-06	HE1020
M5423/07-11	N-3030-2513	M5423/14-07	HE1050
M5423/07-12	NC-3030-2513	M5423/14-08	1113/26
M5423/09-01	N-9030-1/8	M5423/15-01	1211/13
M5423/09-02	N-9030-1/4	M5423/15-02	1211/14
M5423/09-03	N-9040-1/8	M5423/15-03	1211/31
M5423/09-04	N-9060-1/4	M5423/16-01	60225
M5423/09-05	N-9065-3/8	M5423/16-01	60064
M5423/09-06	N-9063-1/4		

**APM's policy is to manufacture our HEXSEAL® sealing boots as defined by the requirements of MIL-Spec B-5423 which we regard as the standard for the switch, circuit breaker and potentiometer industry. These requirements were formulated based on our original patent.

DFARS material is standard on all boots.

Cage Code: 97539

Anatomy of a Hermetic Sealing Boot

The cut-a-way of the boot shown contains an integral secondary seal (Fig. 1) that provides additional protection against differential pressure (inside equipment vs atmospheric) that compresses/seals the toggle-actuator. The secondary chamber also creates a second-barrier should the top half be breached or compromised in any way. All HEXSEALS and E-SEELS also feature our patented flange sealing rib to prevent leakage from seeping past the mounting hole.

Two mounting methods are offered. Our standard bonded nickel-plated brass mounting-nut which replaces the switches original exterior mounting-nut (which is discarded) and an optional method that uses a bonded aluminum IQ Concentro-Nut™ that fits over the original switch exterior mounting nut. The Concentro-Nut option is ideal for maintenance servicing applications where minimum switch disturbance is desirable.

The switch mounting holes on hermetically sealed switches also need environmental panel protection from possible contaminant seepage, i.e., moisture, dust, spilled coke and coffee, etc. For this reason, APM has developed a bonded silicone rubber-stainless steel switch bushing seal. This special seal, specifically designed for hermetically sealed switches, is superior to ordinary O-rings or washers and meets the stringent requirements of MIL B-5423/16-01, MS 25196, and is UL recognized.

Protects an Unsealed Switch

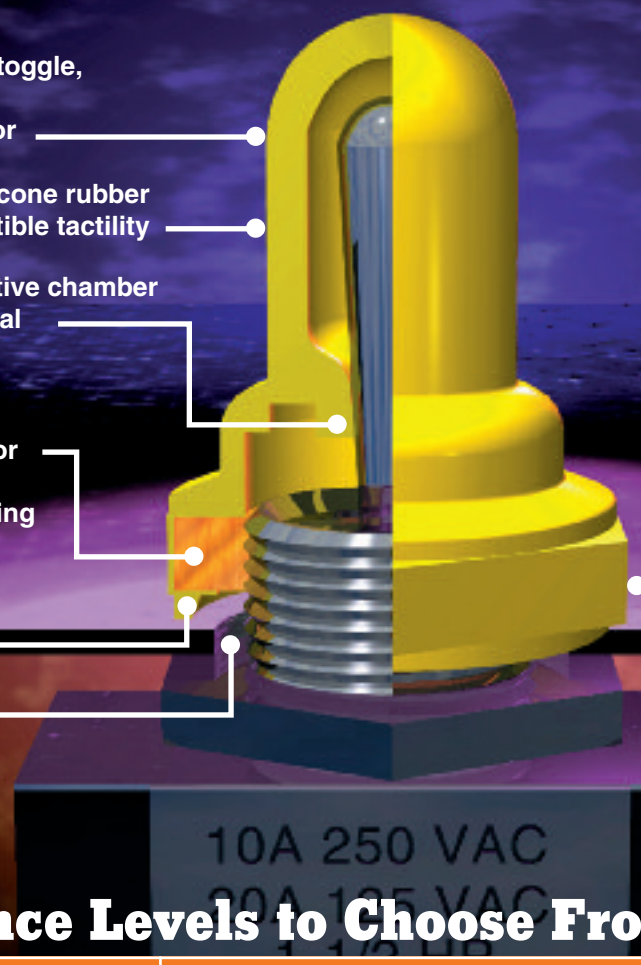

Sealed switches require panel cut-out protection ...

Bushing seal for protection of hermetically sealed switches

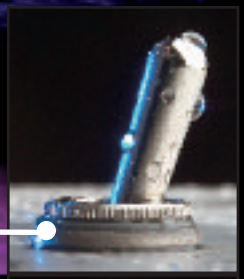

3 Performance Levels to Choose From

SNAP-SEALS®	E-SEELS®	HEXSEALS®
GOOD **• Commercial Grade •**	**BETTER** **• Industrial Grade •**	**BEST** **• Military Grade •**
• Neoprene rubber • Two-piece design • -65°F to +300°F (-53°C to +148°C) temperature range • Suitable for some commercial and consumer applications including low-cost appliances and tools	• UL-recognized for US & Canada • High tear-strength silicone rubber • Single-piece construction • -80°F to +400°F (-62°C to +204°C) temperature range • Suitable for industrial and commercial applications	• High tear-strength silicone rubber per A-A-59588 • Single-piece design • -94°F to +400°F (-70°C to +204°C) temperature range • Suitable for military and industrial applications • UL-recognized for US & Canada

Technical References

SURVIVING HOSTILE CONTROL SYSTEM ENVIRONMENTS

There is an IP-rated UL-recognized environmental sealing boot expressly designed for selected control components (e.g., switches, circuit breakers, potentiometers, panel meters) that mates with and will provide a number of benefits consistent with design considerations that comply with MIL-B-5423 specifications. Originally designed for U.S. military naval applications — rugged handling (with and without gloves), corrosive atmospheres, lubricant contact, frequent wash-downs — these sealing boots have repeatedly proven their battle-tested worthiness. By supporting all the major manufacturers of switches, potentiometers, and circuit breakers, the same protection and reliability are available for a wide spectrum of commercial and industrial switches through the APM HEXSEAL® and E-SEEL® sealing boot system. The following reference data and cross reference charts should be helpful in making your selection, however please do not hesitate to contact our sales support department for assistance.

Enclosure Ratings

To cost-effectively satisfy this application diversity, manufacturers of electrical/electronic equipment enclosures offer a range of products which provide varying degrees of environmental protection. In the interest of "standardizing" an electrical enclosure's performance, standards-making organizations such as NEMA, UL, CSA, and IEC have established various standards (Table 1).

Use of NEMA ratings does not require independent testing. Compliance is left to the manufacturer. On the other hand, UL conducts an independent evaluation of the submitted product. Tests are performed either at UL's laboratories or witnessed by UL engineers at the manufacturer's location. In addition, UL requires follow-up inspections (which may include testing) to assure adherence to prescribed materials and manufacturing procedures.

These ratings provide a quantitative measure of an enclosure's ability to operate in the environment in which it will be used. Each rating defines the degree of protection against rain, snow, sleet, wind-blown dust, hosedown, corrosive agents, and occasional submersion.

While the detailed wording of ratings from standard to standard varies, each is based on similar application descriptions and performance expectations (Table 2). For example, an enclosure meeting UL Standard 50, Type 6 ratings (and similarly NEMA Standard No. 250, Type 6) is designed for indoor and outdoor use. It provides the degree of protection against hosedown, icing, dust, and the entry of water during temporary submersion at the limited depth required for this rating.

Table 1.
Selected Electrical Enclosure Standards

- National Electrical Manufacturers Association NEMA Standards Publication No. 250, "Enclosures for Electrical Equipment"
- National Electrical Manufacturers Association NEMA Standards Publication No. ICS6, "Enclosures for Industrial Controls and Systems"
- Underwriters Laboratories Inc. UL 50, "Standard for Safety, Enclosures for Electrical Equipment"
- Underwriters Laboratories Inc. UL 508, "Standard for Safety, Industrial Control Equipment"
- Canadian Standards Association CSA Standard C22.2 No. 94 "Industrial Control Equipment for Use in Ordinary (Non-Hazardous) Locations"
- International Electrotechnical Commission, IEC 60529 (Ed. 2.1 b:2001) "Degree of Protection Provided by Enclosures (IP code)"

Table 2. NEMA Enclosure Types

Type	Intended Use and Description for Electrical Equipment
1	Indoor use primarily to provide a degree of protection against limited amounts of falling dirt.
2	Indoor use primarily to provide a degree of protection against limited amounts of falling water and dirt.
3	Outdoor use primarily to provide a degree of protection against rain, sleet, windblown dust and damage from external ice formation.
3R	Outdoor use primarily to provide a degree of protection against rain, sleet, and damage from external ice formation.
3S	Outdoor use primarily to provide a degree of protection against rain, sleet, windblown dust and to provide for operation of external mechanisms when ice laden.
4	Indoor or outdoor use primarily to provide a degree of protection against windblown dust and rain, splashing water, hose-directed water and damage from external ice formation.
4X	Indoor or outdoor use primarily to provide a degree of protection against corrosion, windblown dust and rain, splashing water, hose-directed water and damage from external ice formation.
5	Indoor use primarily to provide a degree of protection against settling airborne dust, falling dirt, and dripping noncorrosive liquids.
6	Indoor or outdoor use primarily to provide a degree of protection against hose-directed water, and the entry of water during occasional temporary submersion at a limited depth and damage from external ice formation.
6P	Indoor or outdoor use primarily to provide a degree of protection against hose-directed water, the entry of water during prolonged submersion at a limited depth and damage from external ice formation.
12	
12K	Indoor use primarily to provide a degree of protection against circulating dust, falling dirt, and dripping noncorrosive liquids.
13	Indoor use primarily to provide a degree of protection against dust, spraying of water, oil, and noncorrosive coolant.

UL/NEMA Rating	Nearest Equivalent IP Code
1	IP 20
2	IP 22
3 & 3S	IP 55
3R	IP 24
4 & 4X	IP 66
5	IP 53
6	IP 67
6P	IP 68
12, 12K & 13	IP 54
IEC has no equivalents to UL/NEMA enclosure types 7, 8, 9, 10, or 11	

IEC enclosure protection requirements are defined in IEC 60529, Degree of Protection Provided by Enclosures (IP Code). This standard defines protection against hazardous contact by personnel and by entry of solids and liquids. Requirements for protection against corrosion and other in-use conditions are covered by the IEC standard for the overall product or by requirement specified by the user.

Within this context, Hexseals® and E-Seels® would have the following Maximum IP Rating:

Hexseals® and E-Seels® for:	UL Recognized Ratings (to Std UL 50)*	IP Rating*
Toggle Boots	Types 1, 2, 3, 4, 4X 5, 6, 6P, 12, 12K, 13	IP 66 / IP 68
Pushbutton Boots	Types 1, 2, 3, 4, 4X 5, 6, 6P, 12, 12K, 13	IP 66 / IP 68
Rocker Switch Boots	Types 1, 2, 3R, 5, 12, 12K, 13	IP 55

A dual IP code rating indicates protection against both water jets and water submersion. Rating a product for water immersion ("7" or "8" second digit) does NOT guarantee compliance against water jets from equipment hose down or equal in-use conditions.

***These ratings are based on standardized tests. APM recommends that the user review the actual installation for product suitability. APM welcomes the opportunity to work with the user to assist in finding the most cost-effective sealing solution.**

IP CODE

IEC 60529 DEGREES OF ACCESS TO HAZARDOUS PARTS, FIRST CHARACTERISTIC NUMERAL

IP	First Characteristic Numeral: With Respect to Solid Foreign Objects
0	Non-protected
1	Protected against solid foreign objects ≥ 50 mm diameter
2	Protected against solid foreign objects ≥ 12.5 mm diameter
3	Protected against solid foreign objects ≥ 2.5 mm diameter
4	Protected against solid foreign objects ≥ 1.0 mm diameter
5	Dust-protected (Dust shall not penetrate in quantity to interfere with satisfactory operation of the apparatus or to impair safety)
6	Dust-tight (No ingress of dust)

IEC 60529 DEGREES OF PROTECTION AGAINST WATER INGRESS, SECOND CHARACTERISTIC NUMERAL

IP	Second Characteristic Numeral: With Respect to the Harmful Ingress of Water
0	Non-protected
1	Protected against vertically falling water drops
2	Protected against vertically falling water drops when enclosure tilted up to 15°
3	Protected against spraying water
4	Protected against splashing water
5	Protected against water jets
6	Protected against powerful water jets
7	Protected against the effects of temporary immersion in water
8	Protected against the effects of continuous immersion in water

Toggle Switch Boots

HEXSEAL® and E-SEEL® toggle switch boots are molded from a high tear-strength silicone rubber bonded to a built-in mounting nut. Each encloses the base of the protruding switch bushing and forms a watertight and dust-tight seal against the front panel surface.

SPECIFICATIONS

Material.....HEXSEALS: Silicone rubber conforms to A-A-59588, GR 50 (unless otherwise specified).
E-SEELS: Silicone rubber polymer type ASTM D 1418

Mounting Nut.....HEXSEALS: Brass, nickel-plated
E-SEELS: Brass, black-oxide

Temperature Range....HEXSEALS: -94°F to +400°F (-70°C to +204°C)
E-SEELS: -80°F to +400°F (-62°C to +204°C)

Enclosure Protection..NEMA/UL/ULC Types 1, 2, 3, 3S, 3R, 4, 4X, 6P, 12, 13; IEC IP66/IP68

Pressure Range.....Exceeds 15 psi internal and 1500 psi external (N5032B: 10 psi)

Operational Life.....100,000 actuations (minimum)

Shelf Life.....Excess of 25 years

Resistant to.....Salt spray, sunlight, ozone, weather, fungus, and most acids and lubricating oils

Military Specs*.....Most HEXSEALS meet MIL-B-5423. (See listing on page 6)

Agency Recognition...UL & ULC Recognized to UL Std. 50

Installation.....Please see installation instructions on page 19

*APM's policy is to manufacture our HEXSEAL® sealing boots as defined by the requirements of MIL-Spec B-5423 which we regard as the standard for the switch, circuit breaker and potentiometer industry. These requirements were formulated based on our original patent.

HOW TO ORDER

Specify APM boot part number and, if necessary, the appropriate bushing adaptor part number (please see page 19).

RoHS Compliant

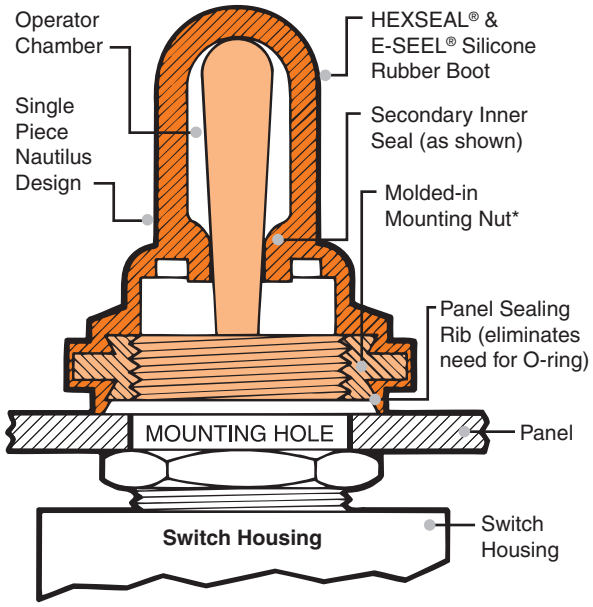

*For I.Q. Surround-Nut option, see next page.
Additional metric sizes available (consult factory)

FIGURE 1

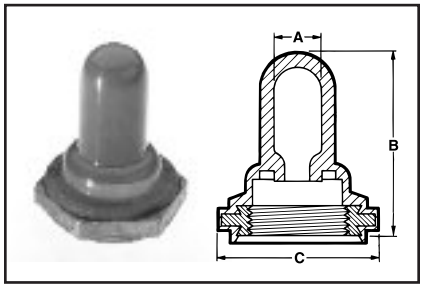

Full-Toggle Boot with Integral Secondary Inner Seal – IP66/68 Rated — Figure 1

Thread Size	Max. Toggle Height Above Bushing (in.)	A Throat or I.D.		B Height		C Flat		Military Part Number	APM Boot Part Number	Color*	HEXSEAL	E-SEEL
		in.	mm	in.	mm	in.	mm					
1/4-40NS-2B	.31	.104	2.64	.422	10.72	.375	9.58	M5423/04-01	N-5030	Gray	•	
1/4-40NS-2B	.37	.062	1.53	.500	12.70	.375	9.52	M5423/05-01	N-5030L†	Gray	•	
1/4-40NS-2B	.28	.062	1.58	.390	9.91	.375	9.52	M5423/05-02	N-5030R	Gray	•	
1/4-40NS-2B	.50	.062	1.58	.594	15.08	.375	9.52	—	N-5030S	Gray	•	
15/32-32NS-2B	.66	.219	5.55	.844	21.44	.625	15.88	M5423/01-01	N-1030	Gray	•	
1/2-32NS-2B	.66	.219	5.55	.844	21.44	.625	15.88	—	N-1030 1/2-32	Gray	•	
15/32-32NS-2B	.71	.219	5.55	.937	23.81	.625	15.88	—	C1131/27	Black		•

*Other colors available. Please consult factory. †Material conforms to A-A-59588 Gr. 25

FIGURE 2

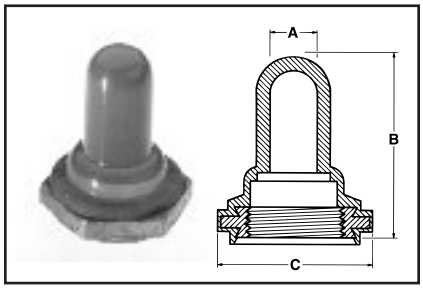

Full-Toggle Boots (with constant I.D.) – IP66/68 Rated — Figure 2

Thread Size	Max. Toggle Height Above Bushing (in.)	A Throat or I.D.		B Height		C Flat		Military Part Number	APM Boot Part Number	Color*	HEXSEAL	E-SEEL
		in.	mm	in.	mm	in.	mm					
M6 (metric)	.37	.116	2.95	.562	14.30	.352	9.00	—	1131/25	Black	•	
15/32-32NS-2B	.437	.210	5.35	.625	15.88	.625	15.88	—	1131/33	Gray	•	
M12 (metric)	.812	.234	5.95	.859	21.83	.625	15.88	—	1131/40	Black	•	
15/32-32NS-2B	.66	.219	5.55	.844	21.44	.625	15.88	—	IN-1030	Gray	•	
15/32-32NS-2B	.66	.256	6.50	.844	21.44	.625	15.88	—	1131/31	Gray	•	
15/32-32NS-2B	.90	.219	5.55	1.093	27.77	.625	15.88	—	1131/26	Gray	•	
15/32-32NS-2B	1.08	.390	9.92	1.328	33.37	.625	15.88	—	N-1002	Gray	•	
15/32-32NS-2B	.925	.300	7.62	1.110	28.19	.625	15.88	—	50154	Gray	•	
1/2-32NS-2B	.66	.219	5.55	.844	21.44	.625	15.88	—	IN-1030 1/2-32	Gray	•	
1/2-32NS-2B	.66	.256	6.50	.844	21.44	.625	15.88	—	1131/32	Black	•	
5/8-32UNS-2B	.78	.187	4.76	.844	21.44	.750	19.05	—	1131/23	Gray	•	
15/32-32NS-2B	.71	.219	5.55	.937	23.80	.625	15.88	—	C1131/28	Black		•

*Other colors available. Please consult factory. Mounting nut material: Aluminum

FIGURE 3

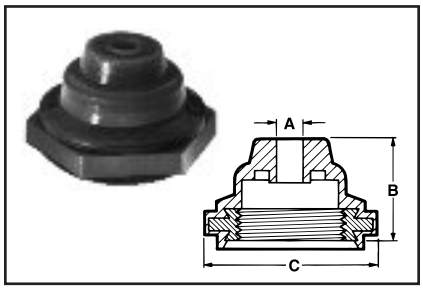

Half-Toggle Boots (toggle actuator protrudes) – IP66/68 Rated — Figure 3

Thread Size	Toggle Diameter Accom-modated (in.)	A Throat or I.D.		B Height		C Flat		Military Part Number	APM Boot Part Number	Color*	HEXSEAL	E-SEEL
		in.	mm	in.	mm	in.	mm					
1/4-40NS-2B	.062-.188	.047	1.19	.250	6.35	.375	9.53	M5423/11-01	N-5032B††	Gray	•	
15/32-32NS-2B	.155-.240	.078	1.98	.437	11.10	.625	15.88	M5423/02-01	N-1030B	Gray	•	
1/2-32NS-2B	.155-.240	.078	1.98	.437	11.10	.625	15.88	—	N-1030B1/2-32	Gray	•	
15/32-32NS-2B	.155-.240	.078	1.98	.437	11.10	.625	15.88	—	C1132/20	Black		•

*Other colors available. Please consult factory.

DIMENSIONS FOR REFERENCE ONLY. Current dimensional drawings can be viewed on our website and CAD drawings can also be downloaded.

TOGGLE SWITCH SEALING BOOTS WITH INTEGRAL IQ™ MOUNTING NUT*

THE IQ CONCENTRO-NUT™ MOUNTS OVER THE SWITCH'S FRONT PANEL MOUNTING-NUT

- **Ideal protection against unforgiving environmental hazards — prolongs switch reliability**
- **Ideal for speedy retrofitting of booted and non-booted switches**
- **Ideal for easy original equipment assembling**
- **Ideal for meeting aesthetic requirements that call for smooth exterior surface around mounting nut**
- **Ideal color solutions for matching boot color to exact panel color, or for defining specific control function on request. Standard color choices are gray and black.**

IQ™ INSTALLS QUICKLY

The APM HEXSEAL IQ Switch Sealing Boot is designed for applications where it is preferable to retain the original switch's front-panel mounting nut. This version is made possible by the incorporation of a newly designed bonded concentric mounting nut that features an internal cavity configuration allowing the integral CONCENTRO-NUT to sit on and wrap itself around the existing original switch front panel nut. This enables the two nuts to work in concert when tightened. The IQ Switch Sealing Boot mounting design permits an easy and speedy retrofit, or new OEM installation. The use of the IQ Sealing Boot prevents any switch disturbance; for example, the undesirable rotation of the switch body and possible stress on its connections.

No special tools or O-Rings, washers or adhesives are required. The IQ Switch Sealing Boot design also features a patented flange sealing-rib that fully contacts the front-panel surface, creating a vacuum-seal that protects the mounting hole from gas or liquid seepage contamination.
In addition to standard black or gray, any color can be specified to match any panel or to define a control function.

DFARS Compliant

RoHS Compliant

*Patent Pending Made in USA

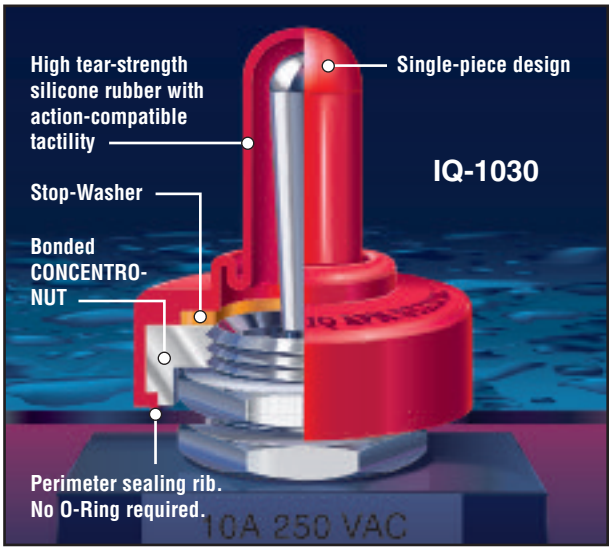

SPECIFICATIONS

Sheath Material: Silicone rubber conforms to A-A-59588, Class 3B, Grade 60 (unless otherwise specified)
Mounting Nut (CONCENTRO-NUT) Material: Aluminum
Stop Nut Material: Brass
Temperature Range: -94°F to +400°F (-70°C to +204°C)
Pressure Range: Exceeds 15 psi internal and 1,500 psi external
Operational Life: 100,000 actuations (minimum)
Shelf Life: Excess of 25 years
Enclosure Protection: IEC 60529 IP 66/68 Rating
Resistant To: Salt spray, sunlight, ozone, weather, ice, sand, dirt, fungus, most acids, solvents and lubricating oils
Military Specs: Meets MIL-B-5423
Agency Recognition: UL Qualification pending
Installation: Mounts over existing toggle switch actuator. Tighten approximately three turns.

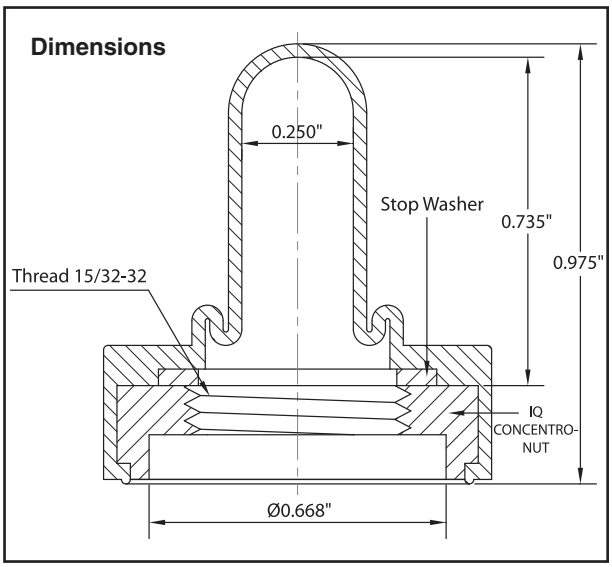

HOW TO ORDER

Specify APM Boot part number. Example: IQ-1030-(add color code letter here) G=Gray, B=Black
Note: For special colors add PMS or other color specification. Consult factory.

FIGURE 4

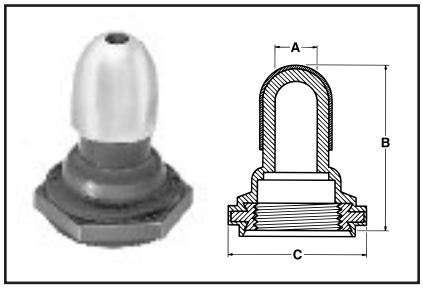

Armored Full Toggle Boots – IP66/68 Rated

Figure 4

Thread Size	Max. Toggle Height Above Bushing (in.)	A Throat or I.D.		B Height		C Flat		Military Part Number	APM Boot Part Number	Color	HEXSEAL	E-SEEL
		in.	mm	in.	mm	in.	mm					
15/32-32NS-2B	.66	.219	5.55	.875	21.44	.625	15.88	—	N-1030A	Gray	•	

Nickel plated brass cap bonded to boot.

FIGURE 5

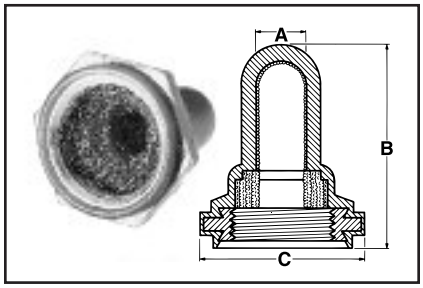

EMI/RFI Shielded Full Toggle Boots – IP66/68 Rated

Figure 5

Thread Size	Max. Toggle Height Above Bushing (in.)	A Throat or I.D.		B Height		C Flat		Military Part Number	APM Boot Part Number	Color*	HEXSEAL	E-SEEL
		in.	mm	in.	mm	in.	mm					
1/4-40NS-2B	.36	.062	1.58	.500	12.70	.375	9.52	—	N-5030L RFI	Gray	•	
15/32-32NS-2B	.66	.219	5.55	.844	21.44	.625	15.88	M5423/01-02	IN-1030 RFI	Gray	•	
1/2-32NS-2B	.66	.219	5.55	.844	21.44	.625	15.88	—	IN-1030 RFI 1/2-32	Gray	•	
1/4-40NS-2B	.28	.062	1.58	.390	9.90	.375	9.52	—	N-5030R RFI	Gray	•	
1/4-40NS-2B	.50	.062	1.58	.594	15.08	.375	9.52	—	N-5030S RFI	Gray	•	

*Other colors available. Please consult factory.
All standard EMI/RFI boots feature a knitted Monel shield. RFI/EMI shielded boots have an operational life of 15,000 actuations (minimum)

FIGURE 5a

Sealed Switch Panel Cut-Out Sealing Bushing – IP66/68 Rated

Figure 5a

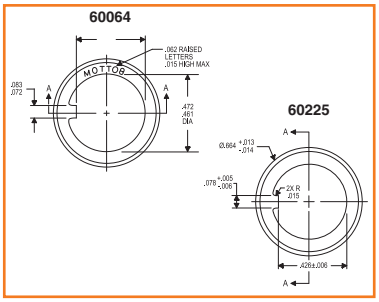

APM Part Number	Compatible Switch Bushing	Washer Diameter	Washer Thickness	Color	Conforms to*
60064 60225	15/32-32	0.677" 0.660"	0.120" 0.105"	Gray	Meets MIL-B-5423/16-01, MS25196, UL & ULC Recognized

*APM's policy is to manufacture our HEXSEAL® sealing boots as defined by the requirements of MIL-Spec B-5423 which we regard as the standard for the switch, circuit breaker and potentiometer industry. These requirements were formulated based on our original patent.

SEE PAGE 16 FOR FULL DETAILS

Back-of-Panel Mounted Toggle Switch Boots

FIGURE 6

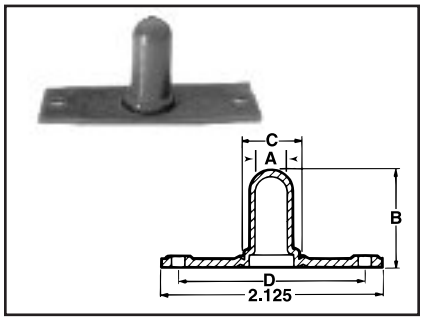

Full Toggle Boot

Figure 6

A Throat or I.D.		B Height		D Distance Between Mtg. Holes		Width		C Clearance Boot Hole Diameter		Military Part Number	APM Boot Part Number	Color*	HEXSEAL	E-SEEL
inch	mm	inch	mm	inch	mm	inch	mm	inch	mm					
.315	7.91	.938	23.82	1.813	46.04	.750	19.05	.510	12.95	—	2030	Gray	•	

*Other colors available. Please consult factory.

FIGURE 7

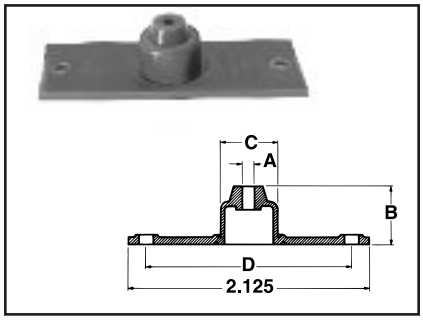

Half Toggle Boot (Toggle Actuator Protrudes)

Figure 7

A Throat or I.D.		B Height		D Distance Between Mtg. Holes		Width		C Clearance Boot Hole Diameter		Military Part Number	APM Boot Part Number	Color*	HEXSEAL	E-SEEL
inch	mm	inch	mm	inch	mm	inch	mm	inch	mm					
.093	2.38	.500	12.70	1.813	46.04	.750	19.05	.510	12.95	M5423/03-01	2030B	Gray	•	

*Other colors available. Please consult factory.

DIMENSIONS FOR REFERENCE ONLY.

Current dimensional drawings can be viewed on our website and CAD drawings can also be downloaded.

RoHS Compliant

Sealing Boots for Pushbutton-Actuated Switches

HEXSEAL® and E-SEEL® pushbutton boots are molded from a high tear-strength silicone rubber bonded to a built-in mounting nut. Each encloses the base of the protruding switch bushing and forms a watertight and dust-tight seal against the front panel surface.

SPECIFICATIONS

Material.....HEXSEALS: Silicone rubber conforms to A-A-59588, Gr. 60 unless otherwise specified.
E-SEELS: Silicone rubber polymer type ASTM D1418

Mounting Nut.....HEXSEALS: Brass, nickel-plated
E-SEELS: Brass, black-oxide

Temperature Range....HEXSEALS: -94°F to +400°F (-70°C to +204°C)
E-SEELS: -80°F to +400°F (-62°C to +204°C)

Enclosure Protection..NEMA/UL/ULC Types 1, 2, 3, 3S, 3R, 4, 4X, 6P, 12, 13; IEC IP66/IP68

Pressure Range.....Exceeds 15 psi internal and 1500 psi external

Operational Life.....100,000 actuations (minimum)

Shelf Life.....Excess of 25 years

Resistant to.....Salt spray, sunlight, ozone, weather, fungus, and most acids and lubricating oils

Military Specs*.....Most HEXSEALS meet MIL-B-5423. (See listing on page 6)

Agency Recognition...UL & ULC Recognized to UL Std. 50

Installation.....Please see installation instructions on page 19

*APM's policy is to manufacture our HEXSEAL® sealing boots as defined by the requirements of MIL-Spec B-5423 which we regard as the standard for the switch, circuit breaker and potentiometer industry. These requirements were formulated based on our original patent.

HOW TO ORDER

Specify APM boot part number and, if necessary, the appropriate bushing adaptor part number (please see page 19).

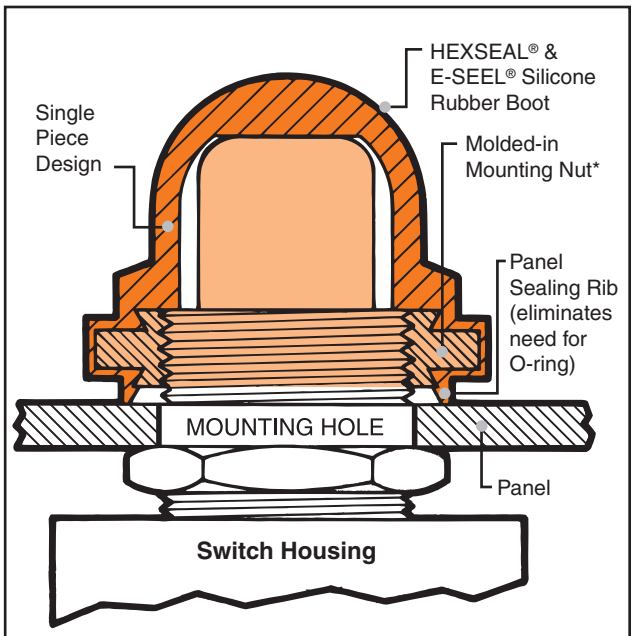

*For I.Q. Surround-Nut option, consult factory.
Metric sizes available (consult factory)

FIGURE 8

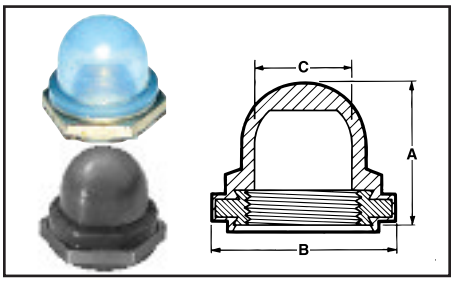

FIGURE 9

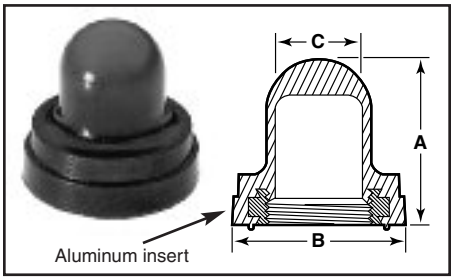

FIGURE 10

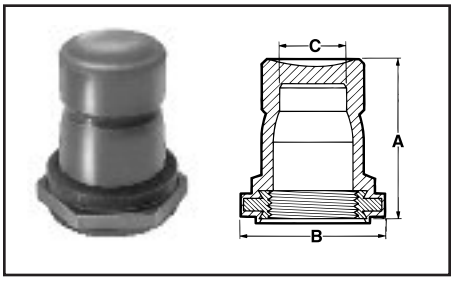

Full Pushbutton Boots – IP66/68 Rated

Figure 8

Thread Size	Max. Plunger Height		A		B Flat		C I.D.		Military Part Number	APM Boot Part Number	Color*	HEXSEAL	E-SEEL
	inch	mm	inch	mm	inch	mm	inch	mm					
8-40 NS-2B	.118	3.00	.226	5.70	.250	6.35	.125	3.18	—	1231/17	Gray	•	
8-40 NS-2B	.188	4.76	.297	7.54	.250	6.35	.120	3.18	SCL6303A-03	N5045	Gray	•	
1/4-32NS-2B	.203	5.16	.313	7.94	.375	9.53	.188	4.76	M5423/10-01	N5040G	Gray	•	
1/4-32NS-2B	.453	11.51	.531	13.49	.375	9.53	.125	3.18	—	1231/32	Gray	•	
1/4-40NS-2B	.141	3.57	.313	7.94	.375	9.53	.188	4.76	M5423/10-03	N5040	Gray	•	
1/4-40NS-2B	.203	5.16	.313	7.94	.375	9.53	.188	4.76	M5423/10-02	N5040R	Gray	•	
1/4-40NS-2B	.344	11.51	.531	13.49	.375	9.53	.125	3.18	—	1231/31	Gray	•	
5/16-32UNEF-2B	.212	5.41	.359	9.13	.437	11.11	.156	3.97	—	1231/27	Gray	•	
3/8-27NS-2B	.545	13.80	.653	16.60	.500	12.70	.300	7.60	—	1231/8	Gray	•	
3/8-32NEF-2B	.545	13.80	.653	16.60	.500	12.70	.300	7.60	—	1231/35	Clear	•	
7/16-28UNEF-2B	.438	11.11	.719	18.26	.625	15.88	.422	10.72	—	NC3030 7/16-28	Clear	•	
7/16-32UN-2B	.438	11.11	.719	18.26	.625	15.88	.422	10.72	—	NC3030 7/16-32	Gray	•	
15/32-32NS-2B	.281	7.14	.547	13.89	.625	15.88	.422	10.72	M5423/07-01	N3030	Gray	•	
15/32-32NS-2B	.281	7.14	.547	13.89	.625	15.88	.422	10.72	M5423/07-11	N3030-2513	Clear	•	
15/32-32NS-2B	.438	11.11	.719	18.26	.625	15.88	.422	10.72	M5423/07-02	NC3030	Gray	•	
15/32-32NS-2B	.438	11.11	.719	18.26	.625	15.88	.422	10.72	M5423/07-12	NC3030-2513	Clear	•	
1/2-32NS-2B	.281	7.14	.547	13.89	.625	15.88	.422	10.72	M5423/07-03	NH3030	Gray	•	
1/2-32NS-2B	.188	4.76	.547	13.89	.625	15.88	.422	10.72	M5423/07-05	NH3030S	Gray	•	
1/2-32NS-2B	.469	11.91	.734	18.65	.625	15.88	.422	10.72	—	NC3030H	Gray	•	
5/8-24NEF-2B	.281	7.14	.609	15.48	.750	19.05	.515	13.10	M5423/07-04	N3040	Gray	•	
15/32-32NS-2B	.281	7.14	.547	13.89	.625	15.88	.422	10.72	—	C1231/41	Black		•
15/32-32NS-2B	.438	11.11	.719	18.26	.625	15.88	.422	10.72	—	C1231/42	Black		•

IP66/68 Rated Figure 9

Thread Size	Max. Plunger Height		A		B O.D.		C I.D.		Military Part Number	APM Boot Part Number	Color*	HEXSEAL	E-SEEL
	inch	mm	inch	mm	inch	mm	inch	mm					
3/8-27NS-2B	.330	8.38	.609	15.48	.641	16.27	.320	8.11	—	1221/12	Gray	•	
15/32-32NS-2B	.400	10.14	.719	18.26	.766	19.45	.375	9.53	—	1221/15	Gray	•	
3/8-24NF-2B	.330	8.38	.609	15.48	.641	16.27	.320	8.11	—	C1221/22	Clear		•
3/8-27NS-2B	.330	8.38	.609	15.48	.641	16.27	.320	8.11	—	C1221/21	Black		•
3/8-27NS-2B	.330	8.38	.609	15.48	.641	16.27	.320	8.11	—	C1221/21 4	Clear		•
3/8-32NEF-2B	.330	8.38	.609	15.48	.641	16.27	.320	8.11	—	C1221/23	Clear		•

Mounting nut material: Aluminum

IP66/68 Rated Figure 10

Thread Size	Max. Plunger Height		A		B Flat		C I.D.		Military Part Number	APM Boot Part Number	Color*	HEXSEAL	E-SEEL
	inch	mm	inch	mm	inch	mm	inch	mm					
7/16-28UNEF-2B	.313	7.94	.797	20.24	.625	15.88	.344	8.73	—	NC3030FL 7/16-28	Gray	•	
7/16-32UN-2B	.313	7.94	.797	20.24	.625	15.88	.344	8.73	—	NC3030FL 7/16-32	Gray	•	
15/32-32NS-2B	.313	7.94	.797	20.24	.625	15.88	.344	8.73	—	NC3030FL	Gray	•	

*Other colors available. Please consult factory.

DIMENSIONS FOR REFERENCE ONLY. Current dimensional drawings can be viewed on our website and CAD drawings can also be downloaded.

RoHS Compliant

FIGURE 11

Panel-Mounted Full Pushbutton Boots – IP66/68 Rated

Figure 11

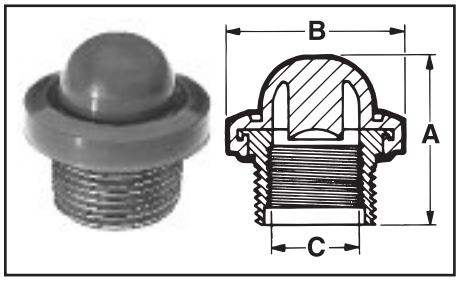

Outside Thread	Plunger-Bushing Height		A		B O.D.		C Inside Thread	Military Part Number	APM Boot Part Number	Color*	HEXSEAL	E-SEEL
	inch	mm	inch	mm	inch	mm						
5/8-27NS-2A	.438	11.12	.844	21.44	.875	22.23	1/2-32NS-2B	M5423/06-01†	3070	Gray	•	
5/8-24NEF-2A	.438	11.12	.844	21.44	.875	22.23	1/2-32NS-2B	M5423/06-03	3073	Gray	•	
5/8-27NS-2A	.688	17.47	.844	21.44	.875	22.23	1/2-32NS-2B	M5423/06-02†	3075	Gray	•	
5/8-24NEF-2A	.688	17.47	.844	21.44	.875	22.23	1/2-32NS-2B	M5423/06-04	3077	Gray	•	

*Other colors available. Please consult factory. †Inactive for new designs.
Material conforms to ZZ-R-765 Class III, Gr. 50.

FIGURE 12

Half-Pushbutton Boots (Pushbutton Actuator Protrudes) – IP66/68 Rated

Figure 12

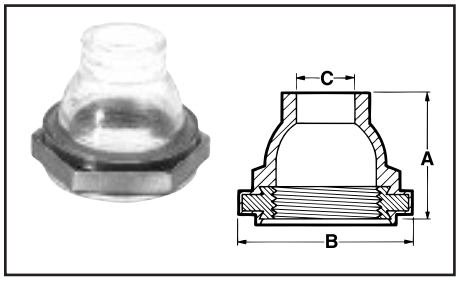

Thread Size	A Height		B Flat		C Throat		Military Part Number	APM Boot Part Number	Color*	HEXSEAL	E-SEEL
	inch	mm	inch	mm	inch	mm					
7/16-28NS-2B	.547	13.89	.625	15.88	.250	6.35	—	N3030B 7/16-28	Clear	•	
7/16-32UN-2B	.547	13.89	.625	15.88	.250	6.35	—	N3030B 7/16-32	Clear	•	
15/32-32NS-2B	.547	13.89	.625	15.88	.250	6.35	—	N3030B	Clear	•	
1/2-32NS-2B	.547	13.89	.625	15.88	.250	6.35	—	NH3030B	Clear	•	

*Other colors available. Please consult factory

FIGURE 13

Armored Pushbutton Boots – IP66/68 Rated

Figure 13

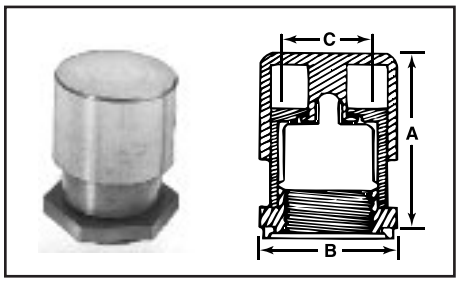

Thread Size	Plunger Height		A		B Flat		C I.D.		Military Part Number	APM Boot Part Number	Color	HEXSEAL	E-SEEL
	inch	mm	inch	mm	inch	mm	inch	mm					
15/32-32NS-2B	.438	11.11	.984	25.00	.750	19.05	.422	10.72	—	1238/1 SS	††	•	
15/32-32NS-2B	.438	11.11	.984	25.00	.750	19.05	.422	10.72	—	1238/5* SS	††	•	

*P/N 1238/5 features a 1 1/4" diameter actuator button.
††Stainless steel housing with silicone boot.

FIGURE 14

EMI/RFI Shielded Full Pushbutton Boots – IP66/68 Rated

Figure 14

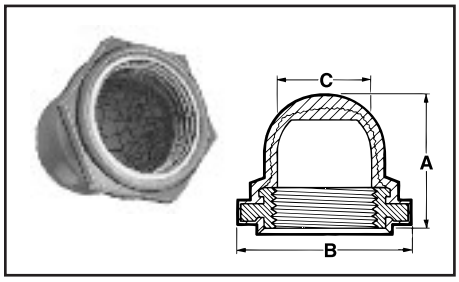

Thread Size	Plunger Height		A		B Flat		C I.D.		Military Part Number	APM Boot Part Number	Color*	HEXSEAL	E-SEEL
	inch	mm	inch	mm	inch	mm	inch	mm					
15/32-32NS-2B	.281	7.14	.547	13.89	.625	15.88	.422	10.72	M5423/07-06	N3030RFI	Gray	•	
15/32-32NS-2B	.438	11.11	.719	18.26	.625	15.88	.422	10.72	M5423/07-07	NC3030RFI	Gray	•	
1/2-32NS-2B	.281	7.14	.547	13.89	.625	15.88	.422	10.72	M5423/07-08	NH3030RFI	Gray	•	
1/2-32NS-2B	.188	4.76	.547	13.89	.625	15.88	.422	10.72	M5423/07-10	NH3030SRFI	Gray	•	
5/8-24NEF-2B	.281	7.14	.609	15.48	.750	19.05	.516	13.10	M5423/07-09	N3040RFI	Gray	•	
1/2-32NS-2B	.469	11.91	.734	18.65	.625	15.88	.422	10.72	—	NC3030HRFI	Gray	•	

*Other colors available. Please consult factory.
All standard EMI/RFI boots feature a molded knitted Monel shield. EMI/RFI shielded pushbutton boots have an operational life of 15,000 actuations (minimum)

Back-of-Panel Mounted Pushbutton Boots

FIGURE 15

Full Pushbutton Boots

Figure 15

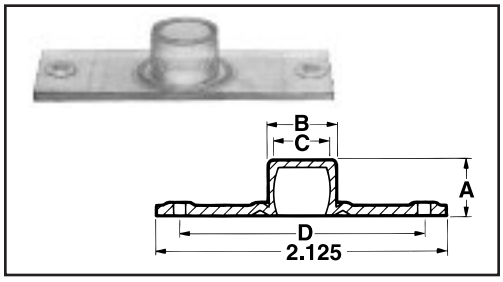

A Height		B O.D.		C		D Hole Locations		Width		Military Part Number	APM Boot Part Number	Color	HEXSEAL	E-SEEL
inch	mm	inch	mm	inch	mm	inch	mm	inch	mm					
.906	23.02	.531	13.49	.453	11.51	1.813	46.04	.750	19.05	—	3050	Clear	•	
.399	10.13	.438	11.11	.359	9.13	1.813	46.04	.750	19.05	—	3051	Clear	•	

Part numbers in this group conform to A-A-59588 Gr. 50.

FIGURE 16

Half Pushbutton Boots (Pushbutton Actuator Protrudes)

Figure 16

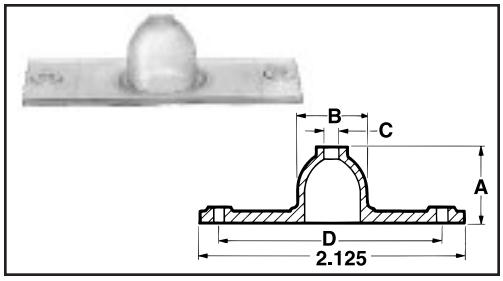

A Height		B O.D.		C Throat		D Hole Locations		Width		Military Part Number	APM Boot Part Number	Color	HEXSEAL	E-SEEL
inch	mm	inch	mm	inch	mm	inch	mm	inch	mm					
.578	14.68	.531	13.49	.156	3.97	1.813	46.04	.750	19.05	—	3050B	Clear	•	

Part numbers in this group conform to A-A-59588 Gr. 50.

DIMENSIONS FOR REFERENCE ONLY.

Current dimensional drawings can be viewed on our website and CAD drawings can also be downloaded.

RoHS Compliant

Indicator & Illuminated Pushbutton Switch Seals

HEXSEAL® indicator and lighted pushbutton switch boots are molded from RUBRGLAS™, APM's proprietary transparent silicone rubber formulation, bonded to a threaded metal insert. Each encloses the base of the protruding indicator or lighted pushbutton switch bushing and forms a watertight and dust-tight seal against the front panel surface.

FIGURE 17

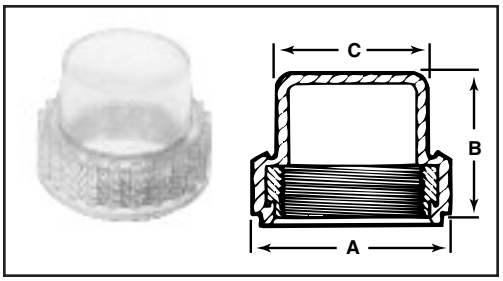

RUBRGLAS® Seals – IP66/68 Rated — Figure 17

Thread Size	A Width		B Height		C Boot O.D.		Fits Indicator Light #	Military Part Number	APM Boot Part Number	Color	HEXSEAL
	inch	mm	inch	mm	inch	mm					
11/16-32NS-2B	1.000	25.40	.750	19.04	.712	18.08	MS-25041	—	4082	Clear	•
11/16-32NS-2B	1.000	25.40	1.000	25.40	.712	18.08	—	—	4086	Clear	•
13/16-32NS-2B	1.125	28.58	.812	20.64	.843	21.43	—	—	4080	Clear	•
7/8-32NS-2B	1.125	28.58	.812	20.64	.858	21.79	—	—	4085	Clear	•
.850-24NS-2B	1.125	28.58	.812	20.64	.838	21.28	—	—	4088	Clear	•

RUBRGLAS™ seals have an operational life of 30,000 actuations (minimum), and a pressure rating of 15 psi internal/external.

Note: See page 20 for example of custom designed seals for lighted pushbutton switches.

DIMENSIONS FOR REFERENCE ONLY.

RoHS Compliant

Colorizing Incandescent Lamp Filters Available

APM HEXSEAL also offers a broad range of silicone colorizing filters for miniature incandescent lamps. These easy-to-install filters turn a white/clear lamp into a colored indicator. Ask for SiliKrome® catalog SK100.

Handset Switch Boots

Ideal for wireless communications applications, HEXSEAL® handset switch boots are engineered to rugged specifications, withstanding a minimum of half a million actuations.

RoHS Compliant

SPECIFICATIONS

Material: Boot: Silicone rubber. Conforms to A-A-59588 Gr. 50
Temperature Range: -94°F to +400°F (-70°C to +204°C)
Shelf Life: Excess of 25 years.
Operational Life: 500,000 actuations, minimum.
Resistant to: Salt spray, weather, sunlight, ozone and most acids
Military Specifications*: Most Hexseal products meet Mil-B-5423.
For listing, see page 6.

*APM's policy is to manufacture our HEXSEAL® sealing boots as defined by the requirements of MIL-Spec B-5423 which we regard as the standard for the switch, circuit breaker and potentiometer industry. These requirements were formulated based on our original patent.

FIGURES 18, 19 & 20 DESCRIPTION	A		B		C		D Hole Locations		Width		Military Part Number	APM Part Number	Color*	HEXSEAL
	inch	mm	inch	mm	inch	mm	inch	mm	inch	mm				
Microphone M52, Handset H33/PT	.652	16.5	2.248	57.1	2.148	54.5	2.594	66.0	.612	15.5	M5423/15-01	1211/13	Gray	•
Handset H189	.406	10.4	1.300	33.0	1.250	31.7	3.380	85.9	.700	11.3	M5423/15-02	1211/14	Black	•
Handset H250	.576	14.6	.808	20.5	.718	18.2	1.500	38.0	.687	17.5	M5423/15-03	1211/31	Black	•

*Other colors available. Please consult factory.

FIGURE 18

Microphone M52, Handset H33/PT
Part No. 1211/13

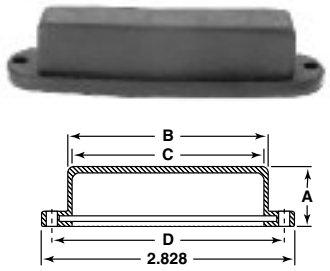

FIGURE 19

Handset H189
Part No. 1211/14

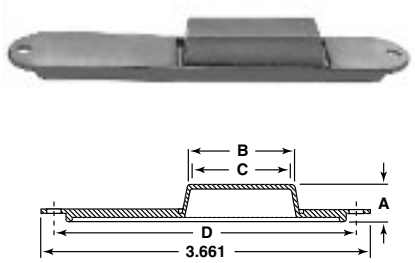

FIGURE 20

Handset H250
Part No. 1211/31

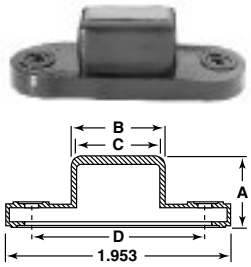

DIMENSIONS FOR REFERENCE ONLY.

Rotary Shaft Seals for Switches & Potentiometers

HEXSEAL® and E-SEEL® rotary shaft seals are molded from a high tear-strength silicone rubber bonded to a built-in mounting nut. Each seal surrounds the rotary shaft and forms a watertight and dust-tight seal against the shaft and front panel surface.

SPECIFICATIONS

Material.....HEXSEALS: Silicone rubber conforms to A-A-59588, Gr. 60 unless otherwise specified.
E-SEELS: Silicone rubber polymer type ASTM D1418

Mounting Nut.....HEXSEALS: Brass, nickel-plated
E-SEELS: Brass, black-oxide

Temperature Range....HEXSEALS: -94°F to +400°F (-70°C to +204°C)
E-SEELS: -80°F to +400°F (-62°C to +204°C)

Enclosure Protection..NEMA/UL/ULC Types 1, 2, 3, 3S, 3R, 4, 4X, 6P, 12, 13; IEC IP66/IP68

Pressure Range.....Exceeds 15 psi internal and 1500 psi external

Operational Life.....100,000 actuations (minimum)

Shelf Life.....Excess of 25 years

Resistant to.....Salt spray, sunlight, ozone, weather, fungus, and most acids and lubricating oils

Military Specs*.....Most HEXSEALS meet MIL-B-5423. (See listing on page 6)

Agency Recognition...UL & ULC Recognized to UL Std. 50

Installation.....Please see installation instructions on page 19

*APM's policy is to manufacture our HEXSEAL® sealing boots as defined by the requirements of MIL-Spec B-5423 which we regard as the standard for the switch, circuit breaker and potentiometer industry. These requirements were formulated based on our original patent.

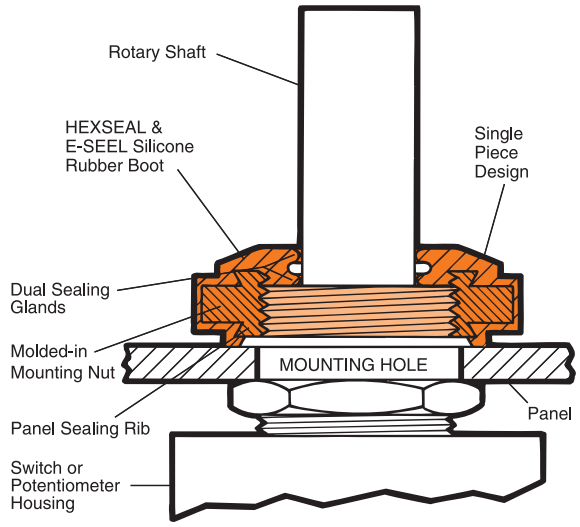

Metric sizes available (consult factory)

HOW TO ORDER

Specify APM boot part number and, if necessary, the appropriate bushing adaptor part number (please see page 19).

FIGURE 21

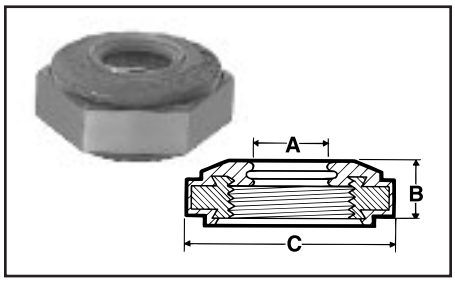

Rotary Shaft Seals – IP66/68 Rated

Figure 21

Thread Size	A Shaft Size		B Height		C Flat		Military Part Number	APM Boot Part Number	Color*	HEXSEAL	E-SEEL
	inch	mm	inch	mm	inch	mm					
1/4-28NF2B	.125	3.18	.219	5.56	.375	9.53	—	N9042 x 1/8	Gray	•	
1/4-32NEF-2B	.125	3.18	.219	5.56	.375	9.53	M5423/09-03	N9040 x 1/8	Gray	•	
3/8-32NEF-2B	.125	3.18	.219	5.56	.500	12.70	M5423/09-01	N9030 x 1/8	Gray	•	
3/8-32NEF-2B	.188	4.78	.219	5.56	.500	12.70	—	N9030 x 3/16	Gray	•	
3/8-32NEF-2B	.250	6.35	.219	5.56	.500	12.70	M5423/09-02	N9030 x 1/4	Gray	•	
3/8-32NEF-2B	.250	6.35	.359	9.12	.500	12.70	—	N9033 x 1/4	Gray	•	
15/32-32NS-2B	.250	6.35	.219	5.56	.625	15.88	M5423/09-04	N9060 x 1/4	Gray	•	
1/2-32NS-2B	.250	6.35	.219	5.56	.625	15.88	M5423/09-06	N9063 x 1/4	Gray	•	
5/8-24NEF-2B	.375	9.53	.219	5.56	.750	19.05	M5423/09-05	N9065 x 3/8	Gray	•	
5/8-24NEF-2B	.500	12.70	.219	5.56	.750	19.05	—	N9065 x 1/2	Gray	•	
3/8-32NEF-2B	.250	6.35	.219	5.56	.500	12.70	—	C1332/40	Black		•

*Other colors available. Please consult factory.

FIGURE 22

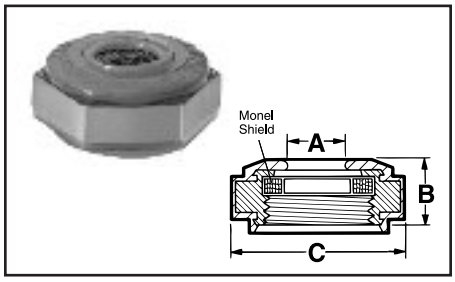

RFI/EMI Shielded Rotary Shaft Seals – IP66/68 Rated

Figure 22

Thread Size	A Shaft Size		B Height		C Flat		Military Part Number	APM Boot Part Number	Color*	HEXSEAL	E-SEEL
	inch	mm	inch	mm	inch	mm					
1/4-32NF2B	.125	3.18	.219	5.56	.375	9.53	M5423/09-09	N9040 x 1/8 RFI	Gray	•	
3/8-32NEF-2B	.125	3.18	.219	5.56	.500	12.70	M5423/09-07	N9030 x 1/8 RFI	Gray	•	
3/8-32NEF-2B	.250	6.35	.219	5.56	.500	12.70	M5423/09-08	N9030 x 1/4 RFI	Gray	•	
3/8-32NEF-2B	.250	6.35	.359	9.12	.500	12.70	M5423/09-14	N9033 x 1/4 RFI	Gray	•	
15/32-32NS-2B	.250	6.35	.219	5.56	.625	15.88	M5423/09-10	N9060 x 1/4 RFI	Gray	•	
5/8-24NEF-2B	.375	9.53	.219	5.56	.750	19.05	M5423/09-11†	N9065 x 3/8 RFI	Gray	•	
1/2-32NS-2B	.250	6.35	.219	5.56	.625	15.88	M5423/09-12	N9063 x 1/4 RFI	Gray	•	
1/4-28NF-2B	.125	3.18	.219	5.56	.375	9.53	—	N9042 x 1/8 RFI	Gray	•	
3/8-32NEF-2B	.125	3.18	.531	13.49	.625	15.88	—	NLK9030 x 1/8 RFI	Gray	•	
3/8-32NEF-2B	.250	6.35	.531	13.49	.625	15.88	—	NLK9030 x 1/4 RFI	Gray	•	

*Other colors available. Please consult factory. †Inactive for new designs.
All Standard RFI/EMI boots feature knitted Monel wire shields.

FIGURE 23

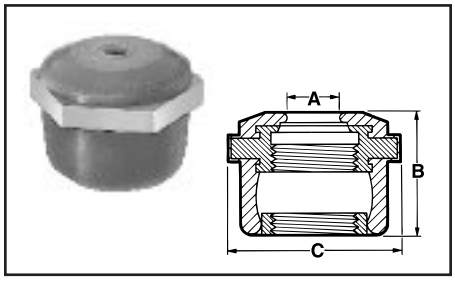

Locking Rotary Shaft Seals – IP66/68 Rated

Figure 23

Thread Size	A Shaft Size		B Height		C Flat		Lock Nut O.D.		Military Part Number	APM Boot Part Number	Color*	HEXSEAL	E-SEEL
	inch	mm	inch	mm	inch	mm	inch	mm					
1/4-32NS-2B	.125	3.18	.500	12.70	.500	12.70	.344	8.74	—	NLK9040 x 1/8	Gray	•	
3/8-32NS-2B	.125	3.18	.531	13.49	.625	15.88	.469	11.91	—	NLK9030 x 1/8	Gray	•	
3/8-32NS-2B	.250	6.35	.531	13.49	.625	15.88	.469	11.91	—	NLK9030 x 1/4	Gray	•	

*Other colors available. Please consult factory.

DIMENSIONS FOR REFERENCE ONLY.
Current dimensional drawings can be viewed on our website and CAD drawings can also be downloaded.

RoHS Compliant

Bushing Seals for Sealed Switch Panel Mounting Hole

Protect Against & Prevent Seepage/Leakage Through Switch Panel Cutout

These reusable self-sealing washers are designed for use with popular sealed switches and circuit breakers. While such sealed switches are designed to tolerate hostile environments (such as salt spray, wash-downs, lubricating fluids, weather, dust and other contaminants) that may compromise reliable switch operation, *they typically do not seal the panel cutout in which they are mounted*. Hence, these same contaminants may "leak past" the bushing through the panel cutout causing equipment/system failures.

Designed to prevent such leakage, each is fabricated from a stainless steel washer with a bonded high-tear strength silicone rubber sealing ring. The soft resilient ring conforms to the panel surface to seal out harmful contaminants.

- Seals the panel cutout in which the circuit breaker is mounted, protecting behind-panel components from dirt/moisture. No O-ring required.
- Reusable in the event the switch or circuit breaker fails and replacement is needed.
- Easy to install without the need for special tools, sealing compounds, sealing tapes, et al.
- Does not compromise switch or circuit breaker performance.
- Meets stringent Military, UL and Canadian National Standards regarding environmental requirements for electrical enclosures.
- UL Recognized for Type 4X & Type 6 enclosure protection.
- Meets IEC IP66/68 enclosure protection

SPECIFICATIONS

Material.....Stainless steel with bonded silicone rubber conforms to A-A-59588 GR. 50 (both sides P/N 60064; one side only P/N 60225)
Temperature Range....-94°F to +400°F (-70°C to +204°C)
Mounting.....Either Front or Behind Panel
Shelf Life.....In excess of 25 years
Resistant to.....Salt spray, sunlight, ozone, weather, fungus, and most acids and lubricating oils
Agency Recognition...UL-Recognized to UL Std. 50, Types 1, 2, 3(R)(S), 4(X), 6, 12 & 13. UL Recognition also includes compliance with Canadian National Standards.

HOW TO ORDER

Specify selected APM boot part number shown in chart below.

APM Part Number	Compatible Switch Bushing	Washer Diameter	Washer Thickness	Color	Conforms to*
60064 60225	15/32-32	0.677" 0.660"	0.120" 0.105"	Gray	Meets MIL-B-5423/16-01, MS25196, UL & ULC Recognized

*APM's policy is to manufacture our HEXSEAL® sealing boots as defined by the requirements of MIL-Spec B-5423 which we regard as the standard for the switch, circuit breaker and potentiometer industry. These requirements were formulated based on our original patent.

Note: Where the possibility of ice build-up or other contaminants can accumulate in the toggle breaker external actuating mechanism, we recommend using a full silicone sealing boot which will protect the actuator mechanism and keep it operating smoothly, and its perimeter seal will protect the mounting hole from potential seepage.

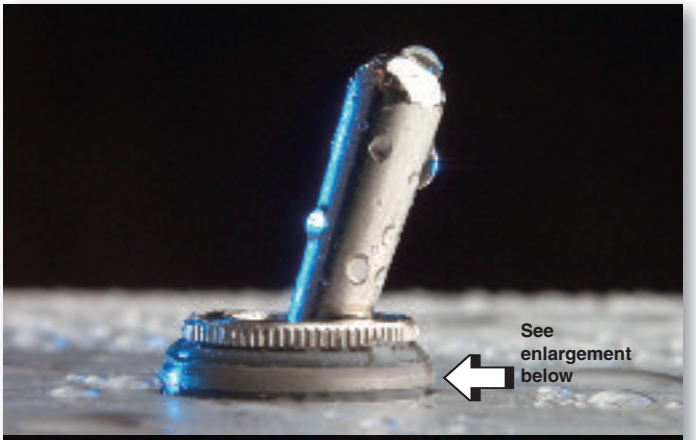

Visit our website for dimensional drawings and to download CAD drawings.

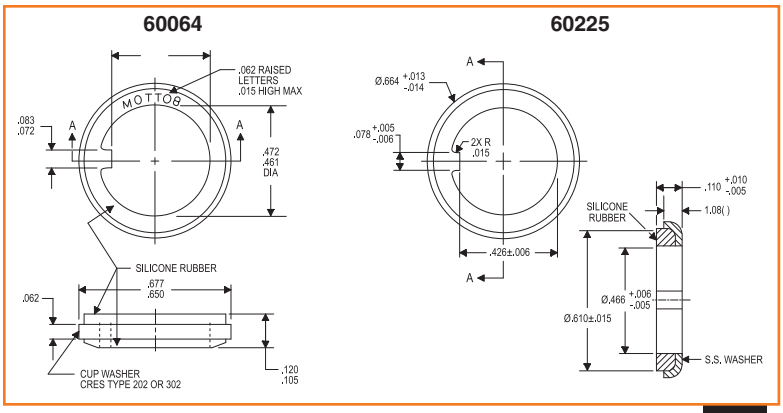

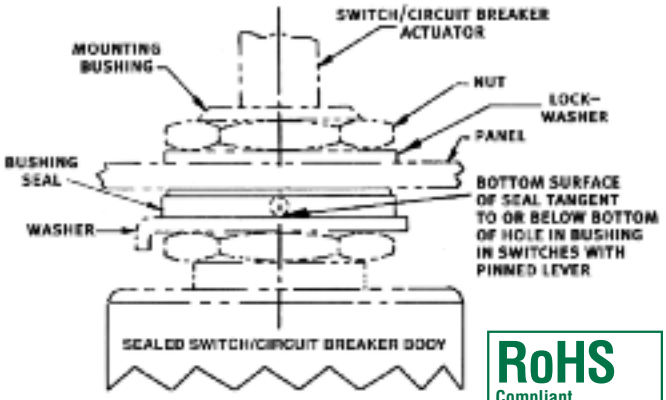

RoHS Compliant

Rocker Switch Boots

E-SEEL® (Rock-R-Seel™) rocker switch boots are molded from RUBRGLAS™ — APM's proprietary high tear-strength, transparent silicone rubber. These durable and flexible boots seal out dust, dirt, and moisture … without compromising switch operability, position status viewing or legend visibility. Each is designed to fully enclose the switch bezel, while our unique molded-in "panel sealing rib" forms a watertight and dust-tight seal against the front panel surface.

SPECIFICATIONS

Material: APM RUBRGLAS™ (transparent silicone rubber), polymer type, ASTM D1418
Temperature Range: -80°F to +400°F (-62°C to +204°C)
Operational Life: 50,000 actuations (minimum)
Resistant to: Salt spray, sunlight, ozone, weather, fungus, and most acids and lubricating oils
Agency Recognition: Rock-R-Seels™ are UL-recognized for US & Canada to UL Std. 50, types 1, 2, 3R, 5, 12, 12K, 13
Shelf Life: Excess of 25 years

HOW TO ORDER

Specify APM boot part number.

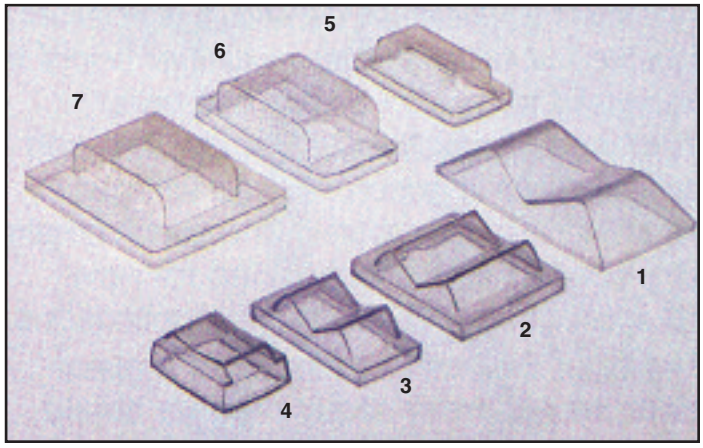

PHOTOS 1-7

IP54 Rated

Photo #	E-SEEL Part #	Dimensions										Compatible with These Rocker Switch Manufacturers (Partial List)
		A		B		C		D		E		
		in.	mm	in.	mm	in.	mm	in.	mm	in.	mm	
1	C1111/7	.359	9.13	.609	15.48	.937	23.81	1.703	43.26	.900	22.87	Consult Factory
2	C1113/62	.297	7.54	.797	20.24	.687	17.46	1.093	27.78	.968	24.61	Arrow Hart – 2600 Series
3	C1113/63	.297	7.54	.406	10.32	.687	17.46	1.093	27.78	.515	13.10	Arrow Hart – 2600 Series
4	C1113/66	.228	5.79	.348	8.84	.531	13.46	.750	19.05	.531	13.49	Carlingswitch #621
5	C1113/70	.297	7.54	.437	11.11	.875	22.23	1.218	30.96	.640	16.27	Carlingswitch RSC Series
6	C1113/71	.413	10.49	.687	17.46	1.046	26.59	1.327	36.51	.703	17.86	Carlingswitch M Series Airpax R11 Eaton/Heinemann LC-1
	C1113/80	.560	14.22	.750	19.05	1.375	34.92	1.750	44.45	.900	22.86	Potter W-33 Carling LTI6
7	C1113/75	.413	10.49	.687	17.46	1.046	26.59	1.437	36.51	1.390	35.32	Carlingswitch M Series Airpax R21 Eaton/Heinemann LC-2
Not Shown	C1213/53	.312	9.14	.700	19.81	.700	19.81	1.120	29.21	.800	23.11	Oslo S Series
	C1213/60	.350	10.16	1.000	21.08	.820	21.08	1.120	29.21	.800	23.11	Oslo S Series

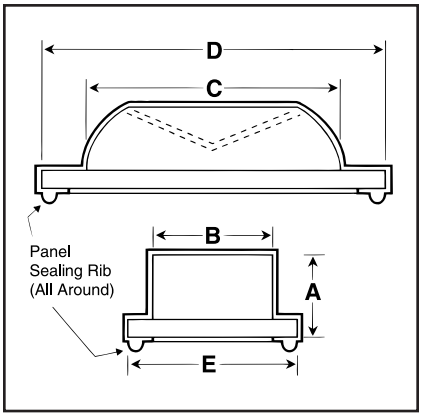

DIMENSIONS FOR REFERENCE ONLY.

Current dimensional drawings can be viewed on our website and CAD drawings can also be downloaded.

RoHS Compliant

Example:
Carling Technologies
M Series Rocker Actuator Switch
with C1113/71 E-SEEL

Economy Switch Seals

SNAPSEELS®

SNAPSEELS® combine economy with performance for more moderate temperature conditions and lower-demand commercial-grade applications. Each consists of a molded neoprene boot which snaps over a specially designed shouldered mounting nut. These inexpensive boots are an ideal way to protect switches and potentiometers against dust, dirt, grease and moderate amounts of moisture.

SPECIFICATIONS

Material: Boot: Neoprene.
Color: Black (other materials and colors available on special order.)
Temperature Range: -65°F to +300°F (-53°C to +148°C)
Shelf Life: 2 years.
Mounting Nut: Aluminum (see table below)
Installation: A. Mount the switch using SNAPSEEL shouldered mounting nut.
B. Press SNAPSEEL over switch actuator and snap over nut.

HOW TO ORDER

Select boot to fit switch type and dimensions. Choose shouldered mounting nut to mate with selected boot. **SEE TABLE BELOW FOR SHOULDERED MOUNTING NUT OPTION.** For example: When ordering a pushbutton boot PN 1211/10, also order its companion shouldered mounting nut P/N 2120/122/1.

Pushbutton Boots

Part No. 1211/10
Pushbutton Height from panel: Up to 9/16"
Pushbutton Diameter: Up to 1/4"
Bushing Diameter: 15/32" maximum

Part No. 1211/5
Pushbutton Height from panel: Up to 9/16"
Pushbutton Diameter: Up to 1/4"
Bushing Diameter: 3/8" maximum

Part No. 1211/32
Pushbutton Height from panel: Up to 19/64"
Pushbutton Diameter: Up to 1/8"
Bushing Diameter: 1/4" maximum

P/N 1211/10 P/N 1211/5 P/N 1211/32

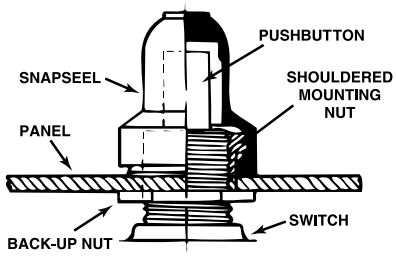

Toggle Switch Boots

Part No. 1111/4
Bat Handle Height from panel: 7/8"
Bat Handle Diameter: Up to 1/4"
Bushing Diameter: 15/32" maximum

Part No. 1111/9
Subminiature Toggle Boot
Bat Handle Heights from panel: Up to 9/16"
Bat Handle Diameter: Up to 1/8"
Bushing Diameter: 1/4" maximum

P/N 1111/4 P/N 1111/9

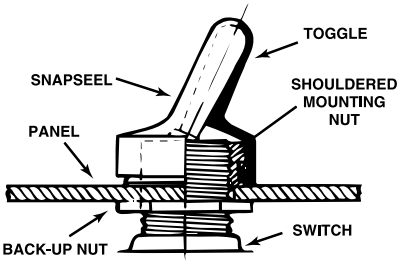

Rotary Shaft Boots

Part No. 1312/7
Shaft Diameter: 1/4" nominal
Bushing Diameter: 3/8" maximum

Part No. 1312/8
Shaft Diameter: 1/8" nominal
Bushing Diameter: 1/4" maximum

P/N 1312/7 P/N 1312/8

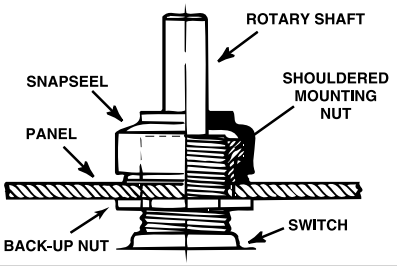

SNAPSEEL™ Shouldered Mounting Nut Selection Chart

TO INSURE PROPER DESIGN FUNCTION, SNAPSEEL MUST BE USED WITH APM SHOULDER TYPE NUT (SEE CHART FOR SIZES). METRIC THREAD AVAILABLE ON REQUEST.

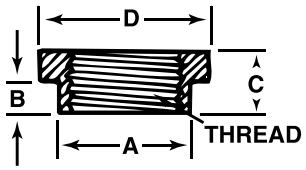

MATERIAL: ALUMINUM

APM Part No. (Shouldered Nut)	Bushing Thread Size*	For use with SNAPSEEL P/N	Dimensions			
			A	B	C	D
2120/122/1	15/32-32	1211/10, 1111/4	17/32"	3/32"	11/64"	5/8"
2120/122/2	3/8-27	1211/5, 1312/7	13/32"	3/32"	11/64"	1/2"
2120/122/3	3/8-32	1211/5, 1312/7	13/32"	3/32"	11/64"	1/2"
2120/122/5 2120/122/6 2120/122/7 2120/122/9 2120/122/10	1/4-40 M6 x .75 10-48 1/4-32 12-24	1211/32 1111/9 1312/8	9/32"	3/64"	3/32"	5/16"

*Other thread sizes available. Please consult factory.

RoHS Compliant

Installation Instructions for Threaded HEXSEAL® & E-SEEL® Boots

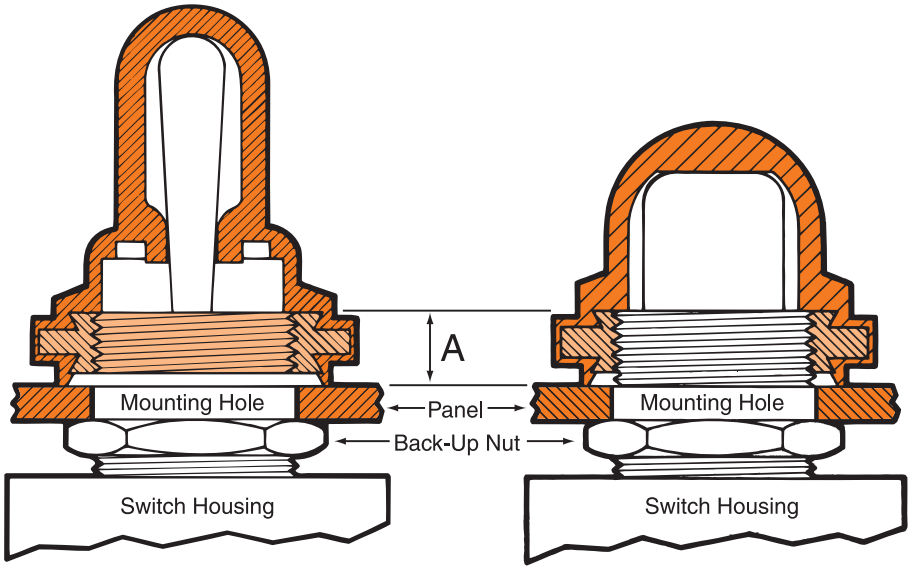

IMPORTANT — CAUTION

STEP 3: THREAD RULE DIMENSION A
3 to 4 threads (maximum) for all toggle pushbutton and rotary shaft seals (except N5000 series).
2 to 3 threads (maximum) for N5000 series.

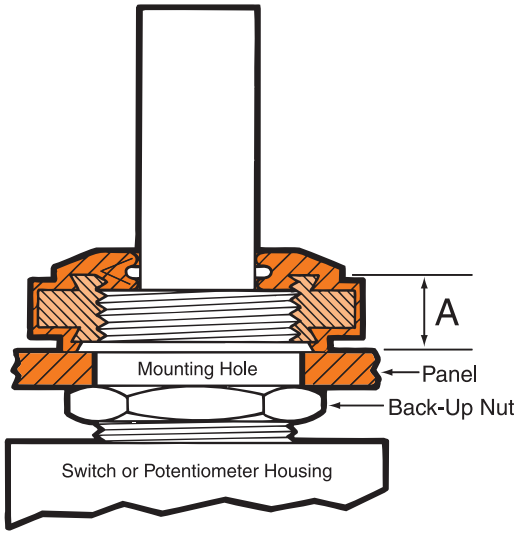

For proper installation of these boots, follow these five sequential steps. It is EXTREMELY IMPORTANT that the number of threads on the switch/potentiometer bushing EXPOSED ABOVE THE FRONT PANEL SURFACE be within the recommendation (see chart above). Failure to respect these maximums may result in boot damage (such as tearing).

STEP 1. Remove front mounting nut from switch bushing.
STEP 2. Put threaded bushing through panel.
STEP 3. Adjust back-up nut to allow the specified number of threads to protrude past front of panel (see Dimension "A" above).
STEP 4. If needed, install appropriate bushing adaptor.
STEP 5. Install switch boot in place of front mounting nut.

RECOMMENDED INSTALLATION TOOLS:

- Six point hex socket wrench.
- Spintite.
- Adjustable wrench (without serrated jaws).

For torque setting, consult factory.

Threaded Bushing Adaptors

Inside (Bushing) Thread Size (Class 2B)	Outside (Boot) Thread Size (Class 2A)	APM Part Number
3/8-32	15/32-32	2500/1/5*
15/32-32	11/16-32	2500/1/7
1/2-32	11/16-32	2500/1/10
15/32-32	13/16-32	2500/1/8
1/2-24	13/16-32	2500/1/9
5/8-24	13/16-32	2500/1/11
5/8-24	7/8-32	2500/1/12
3/4-32	7/8-32	2500/1/13*
3/4-20	7/8-32	2500/1/14*

*5/32 thick. Additional sizes, including metric, available. Consult factory.

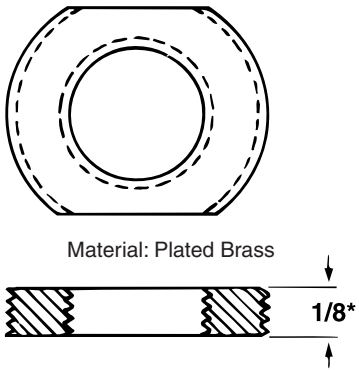

*Unless otherwise noted.

Custom Switch Boots & Seals...

APM HEXSEAL tailors special boots for special needs. If your application requires boots not shown in this catalog, please call us for custom design assistance. Your need may be satisfied by an inexpensive variation of a standard product or mold. Whether your application calls for custom colors, other bushing/bezel sizes, alternative boot materials or a totally custom design, let us know. We have satisfied diverse requirements including full seals for an array of switches, transparent panel meter boots, and electronic connector seals.

Pick a Shape ... Any Shape ...

For over sixty years, we've tackled a myriad of product-environmental sealing boot configuration challenges. Drawing on our experience with a wide range of exotic elastomers and high-precision molding, and using the latest computer-aided technology, APM has provided practical and economical solutions for the military, industrial and commercial markets. We welcome the opportunity to provide design assistance. Send us your product, specifications or drawings, and we'll gladly quote.

... Any Application

Shown at right are two examples of custom-designed silicone seals for use indoors or out. At top, a single-piece clear silicone rubber seal designed to protect delicate circuitry of the outdoor-mounted controls for a sophisticated audio system from hostile contaminants such as water, dust, dirt and pollen. Silicone rubber preserves tactile feel of buttons for smooth operation. Below, a single-piece tri-color (black, green and clear) silicone rubber seal designed for a remote automotive keyless entry control. With extensive experience in designing and molding a wide range of elastomers, APM specializes in developing cost-effective sealing solutions for electrical and electronic applications.

Custom Keypads

You're looking at one of many variations of keypad seals used in telecommunications, security, medical, industrial and other applications where environmental protection is essential for long-term, reliable equipment performance.

Learn more about our other standard and custom products ... Ask for these catalogs:

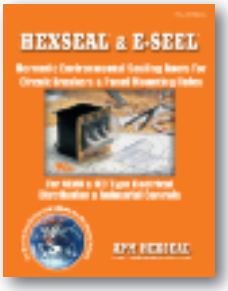

Circuit Breaker Boots
Catalog CB

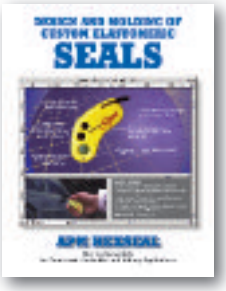

Custom Elastomeric Seals
Catalog CS

Incandescent Lamp Colorizing Filters
Catalog SK

Self-Sealing Fasteners
Catalog SF

APM HEXSEAL®
Electronics Division
44 Honeck Street • Englewood NJ 07631
(201) 569-5700 • Sales Toll Free (800) 498-9034 • Fax (201) 569-4106
Web: www.apmhexseal.com • E-mail: info@apmhexseal.com

HEXSEALS, E-SEELS, ROCK-R-SEELS, RUBRGLAS, SEELSKREWS and I.Q. SURROUND NUT are U.S. Registered trademarks of APM HEXSEAL CORPORATION.

Printed in U.S.A.
APM-2008