REVISIONS					
REV	ECO	DESCRIPTION	DATE	BY	APPR
B1	-	RELEASED DRAWING	JULY-1-2014	BEN	TOMMY

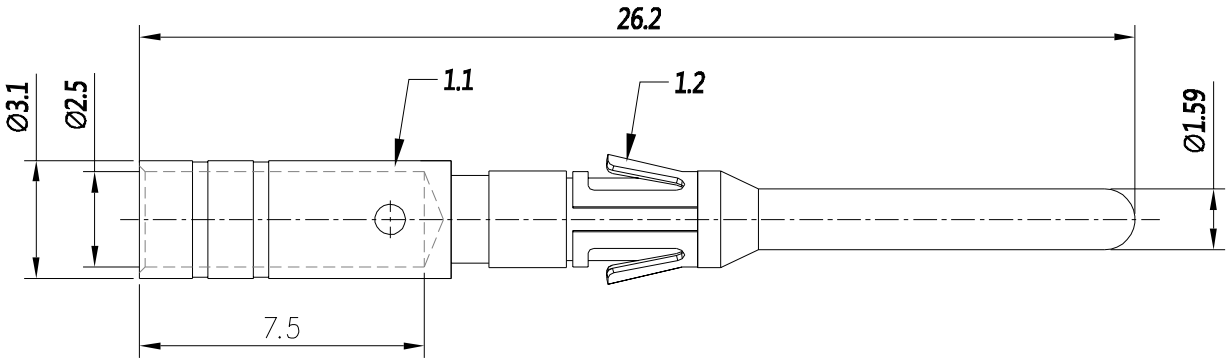

P/N	CONTACT PLATING(MATING AREA)
MP14M23T	TIN PLATING OVER NICKEL.
MP14M23S	SILVER PLATING OVER NICKEL.
MP14M23F	GOLD FLASH PLATING OVER NICKEL.
MP14M23G10	10μ"GOLD PLATING OVER NICKEL.
MP14M23G15	15μ"GOLD PLATING OVER NICKEL.
MP14M23G30	30μ"GOLD PLATING OVER NICKEL.

NOTES : (UNLESS OTHERWISE SPECIFIED)
1. MATERIAL :
   1.1. CONTACT BODY : COPPER ALLOY.
   1.2. POSITIONING CLIP : COPPER ALLOY.
2. SPECIFICATIONS :
   2.1 CURRENT RATING : 13A(MAX).
   2.2 TERMINATION TYPE : CRIMPING.
   2.3 WIRE RANGE : 16~14AWG.
3. SUITABLE SOCKET TYPE : MS14M23xx.
4. ROHS COMPLIANT.
5. ALL DIMENSIONS ARE FOR REFERENCE USE ONLY.

QUANTITY	PART NUMBER	DESCRIPTION	ITEM

MATERIALS LIST

UNLESS OTHERWISE SPECIFIED
1) All dimensions are in metric(mm).
2) Tolerances are as follows:
1 PL DEC ±0.30 | Fractions ±1/64
2 PL DEC ±0.15 | Angles ±1°
3 PL DEC ±0.08
3) Note reference = X

MATERIAL SPECIFICATIONS:

PROCESS SPECIFICATIONS:

NEXT ASS'Y:

SIGNATURES		DATE
DRAWN:	BEN	JULY-1-2014
CHECKED:		
ENGINEER:		
APPROVAL:		
CUSTOMER:		

THIS DRAWING IS SUPPLIED FOR INFORMATION ONLY. DESIGN FEATURES, SPECIFICATIONS AND PERFORMANCE DATA SHOWN HERSON ARE THE PROPERTY OF THE AMPHENOL CORPORATION. NO RIGHTS OF REPRODUCTION ARE IMPLIED. ALL DIMENSIONS ARE SUBJECT TO NORMAL MANUFACTURING VARIATIONS.

Amphenol
Sine Systems - www.amphenol-sine.com
44724 Morley Drive
Clinton Township, MI 48036

ECO-MATE,PIN CONTACT, MACHINE, 16-14AWG, SIZE 16

SIZE	TYPE	DWG NO:	REVISION
B	C-	MP14M23xx	B1

SCALE: NONE SHEET 1 OF 1

TITLE: ECO-MATE,PIN CONTACT, MACHINE,16-14AWG, SIZE 16
DWG NO: MP14M23xx
REV: B1
SH: 1
OF: 1