AS85049/52 and MS3417
Straight Strain Relief
Self-Locking or Non-Self-Locking

CONNECTOR DESIGNATOR:	
A	AS50151 Series AS34001 Crimp, MIL-DTL-26482 Series II, SAE-AS1703 Crimp Series III, MIL-DTL-83723 Series I & III

Basic Part Number: **M85049/52**

Dash No.: **S 10 W**

FOR NEW DESIGN USE AS85049/118

S = Self-Locking
-1 = Non-Self-Locking
N = *Non-Detented*

Material and Finish Designator
A = Aluminum, Black Anodize
N = Aluminum, Electroless Nickel
W = Aluminum, 1000 Hour Cadmium Olive Drab over Electroless Nickel

Superseded PART NUMBER

MS3417-10 A

- Basic Part No. (Non-Self-Locking)
- Dash No.
- Metal and Finish Designator
  - A = Aluminum 1000 Hour Cadmium Olive Drab over Electroless Nickel
  - C = Aluminum, Cadmium Olive Drab
  - G = Aluminim Black Anodize
  - N = Aluminum, Electroless Nickel

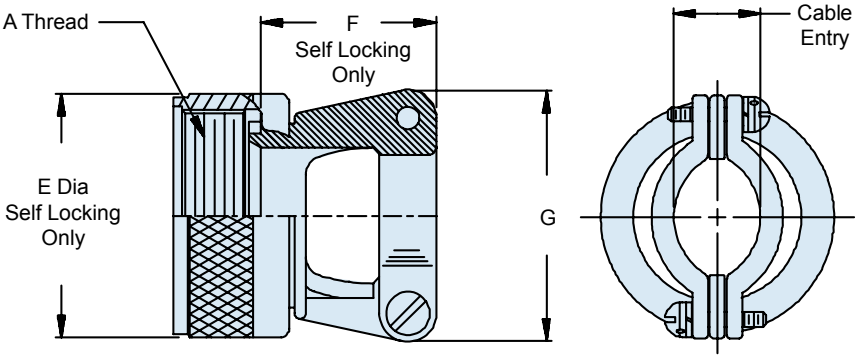

APPLICATION NOTES

1. Assembly to be identified with manufacturer's name and part number, space permitting.
2. Cable Entry is defined as the accommodation entry for the wire bundle or cable.
3. Dimensions are not intended for inspection criteria.
4. For complete dimensions, see the applicable Military Specification.
5. Metric dimensions (mm) are in parentheses.

TABLE I: Shell Size, Cable Entry and Backshell Dimensions

Dash No.	A Thread Class 2B	Ø E Max Self-Locking		F Max Self-Locking		G Max		Cable Entry Min		Cable Entry Max	
3*+	.562 - 24 UNEF	-	-	-	-	.782	(19.9)	.125	(3.2)	.204	(5.2)
8	.500 - 20 UNF	.885	(22.5)	.73	(18.5)	.782	(19.9)	.125	(3.2)	.204	(5.2)
10	.625 - 24 UNEF	1.010	(25.7)	.85	(21.6)	.862	(21.9)	.187	(4.7)	.286	(7.3)
12	.750 - 20 UNEF	1.135	(28.8)	.98	(24.9)	1.003	(24.6)	.291	(7.4)	.416	(10.6)
14	.875 - 20 UNEF	1.260	(32.0)	.98	(24.9)	1.061	(25.5)	.351	(8.9)	.476	(12.1)
16	1.000 - 20 UNEF	1.385	(35.2)	1.10	(27.9)	1.234	(26.9)	.501	(12.7)	.626	(15.9)
18	1.062 - 18 UNEF	1.510	(38.4)	1.35	(34.3)	1.466	(35.4)	.518	(13.2)	.706	(17.9)
20	1.188 - 18 UNEF	1.635	(41.5)	1.98	(50.3)	1.572	(37.2)	581	(14.8)	.831	(21.1)
22	1.313 - 18 UNEF	1.760	(44.7)	2.73	(69.3)	1.688	(39.9)	.644	(16.4)	.956	(24.3)
24	1.438 - 18 UNEF	1.885	(47.9)	2.88	(73.2)	1.790	(43.1)	.706	(17.9)	1.081	(27.5)
28+	1.750 - 18 UNS	2.135	(54.2)	2.528	(64.2)	2.035	(45.5)	.750	(19.1)	1.187	(30.1)
32+	2.000 - 18 UNS	2.395	(60.8)	2.591	(65.8)	2.386	(51.7)	.875	(22.2)	1.250	(31.8)
36+	2.250 - 16 UN	2.635	(66.9)	2.13	(54.1)	2.446	(60.6)	.938	(23.8)	1.375	(34.9)
40+	2.500 - 16 UN	2.885	(73.3)	2.44	(62.0)	2.566	(65.2)	.938	(23.8)	1.500	(38.1)
44+	2.750 - 16 UN	3.135	(79.6)	3.00	(76.2)	2.860	(72.6)	1.188	(30.2)	1.750	(44.5)
48+	3.000 - 16 UN	3.385	(86.0)	3.40	(86.4)	3.344	(84.9)	1.312	(33.3)	1.875	(47.6)
61*+	1.500 - 18 UNEF	-	-	-	-	1.775	(45.1)	.706	(17.9)	1.081	(27.5)

* Not Available in Self Locking + Not Available under M83723/15S

© 2012 Glenair, Inc. CAGE Codes 06324 Printed in U.S.A.

GLENAIR, INC. • 1211 AIR WAY • GLENDALE, CA 91201-2497 • 818-247-6000 • FAX 818-500-9912
www.glenair.com
E-Mail: sales@glenair.com