KEMET Part Number: M39003/01-6297

(T212C106K075BS, CSR13H106KB)

T212_CSR13, Tantalum, MnO2 Tantalum, Military/High Reliability, 10 uF, 10%, 75 VDC, 1.6 Ohms

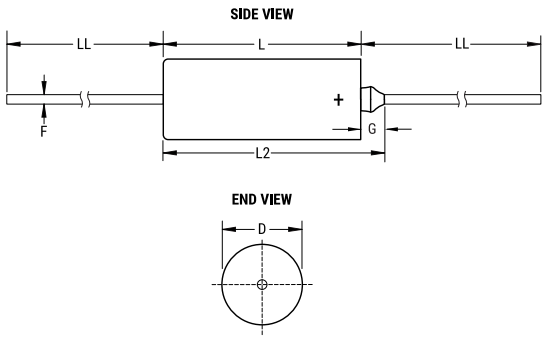

Dimensions	
D	7.34mm +/-0.25mm
L	17.42mm +/-0.79mm
L2	20.88mm
LL	38.1mm +/-6.35mm
F	0.64mm +/-0.05mm
G	3.46mm +0.79mm

Packaging Specifications	
Packaging:	Bulk, Tray
Packaging Quantity:	20

General Information	
Supplier:	KEMET
Series:	T212_CSR13
Dielectric:	MnO2 Tantalum
Style:	Axial Hermetic
Description:	Axial, Solid Tantalum, Hermetically Sealed, Military, CSR13 Style
Features:	Low Leakage
RoHS:	No
Prop 65:	**WARNING:** Cancer and reproductive harm - www.p65warnings.ca.gov.
REACH:	SVHC (Pb – CAS 7439-92-1)
Termination:	Lead (SnPb)
Lead:	Wire Leads
Qualifications:	MIL-PRF-39003, CSR13 Style
Construction:	Hermetic
Notes:	Dimensions Include Insulating Sleeve. Lead Length Shown Is For Parts Supplied With Bulk Packaging, When Supplied On T&R Or Ammo, Lead Length Is Determined By Taping Specification

Specifications	
Capacitance:	10 uF
Capacitance Tolerance:	10%
Voltage DC:	75 VDC (85C), 64 VDC (125C Surge), 0.75 VDC (125C Reverse)
Temperature Range:	-55/+125C
Failure Rate:	B (0.1%/1000 Hrs)
Resistance:	1.6 Ohms (100kHz)
Ripple Current:	280 mAmps (100kHz)
Leakage Current:	5 uA
Testing and Reliability:	Standard Testing To MIL-PRF-39003

Statements of suitability for certain applications are based on our knowledge of typical operating conditions for such applications, but are not intended to constitute - and we specifically disclaim - any warranty concerning suitability for a specific customer application or use. This Information is intended for use only by customers who have the requisite experience and capability to determine the correct products for their application. Any technical advice inferred from this Information or otherwise provided by us with reference to the use of our products is given gratis, and we assume no obligation or liability for the advice given or results obtained.

© 2006 - 2019 KEMET