Note: This datasheet may be out of date.
Please download the latest datasheet of LQW15AN20NG8Z# from the official website of Murata Manufacturing Co., Ltd.
http://www.murata.com/en-US/products/productdetail?partno=LQW15AN20NG8Z%23

LQW15AN20NG8Z#

"#" indicates a package specification code.

0402(inch)/1005(mm) size, wound inductor.

In Production | Info-tainment | AEC-Q200 | RoHS | REACH | 125 °C max. | Wound (Non mag) | Low Rdc | High Q | Reflow OK

< List of part numbers with package codes >
LQW15AN20NG8ZB LQW15AN20NG8ZD

Appearance & Shape

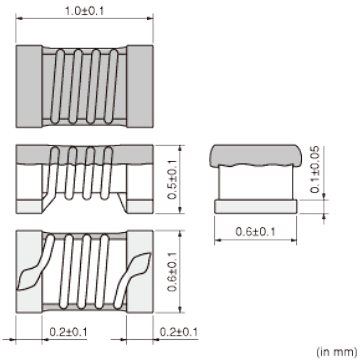

References

Packaging	Specifications	Minimum Order Quantity
B	Bulk(Bag)	500
D	180mm Paper Tape	10000

Mass (typ.)	
1 piece	0.0009g

Attention
1.This datasheet is downloaded from the website of Murata Manufacturing Co., Ltd. Therefore, it's specifications are subject to change or our products in it may be discontinued without advance notice. Please check with our sales representatives or product engineers before ordering.
2.This datasheet has only typical specifications because there is no space for detailed specifications.
Therefore, please review our product specifications or consult the approval sheet for product specifications before ordering.

Note: This datasheet may be out of date.
Please download the latest datasheet of LQW15AN20NG8Z# from the official website of Murata Manufacturing Co., Ltd.
http://www.murata.com/en-US/products/productdetail?partno=LQW15AN20NG8Z%23

LQW15AN20NG8Z#

"#" indicates a package specification code.

Specifications

L size	1.0±0.1mm
W size	0.6±0.1mm
T size	0.5±0.1mm
Size code inch (mm)	0402 (1005)
Inductance	20nH±2%
Inductance Test Frequency	100MHz
Rated current (Itemp) (Based on Temperature rise)	800mA
Max. of DC resistance	0.186Ω
Q(min.)	30
Q Test Frequency	250MHz
Self resonance frequency (min.)	4.5GHz
Operating Temperature Range(Self-temperature rise is not included)	-55°C to 125°C
Series	LQW15AN_8Z

Attention
1.This datasheet is downloaded from the website of Murata Manufacturing Co., Ltd. Therefore, it's specifications are subject to change or our products in it may be discontinued without advance notice. Please check with our sales representatives or product engineers before ordering.
2.This datasheet has only typical specifications because there is no space for detailed specifications.
Therefore, please review our product specifications or consult the approval sheet for product specifications before ordering.

Note: This datasheet may be out of date.
Please download the latest datasheet of LQW15AN20NG8Z# from the official website of Murata Manufacturing Co., Ltd.
http://www.murata.com/en-US/products/productdetail?partno=LQW15AN20NG8Z%23

LQW15AN20NG8Z#

"#" indicates a package specification code.

Notice For General

In operating temperatures exceeding +85°C, derating of current is necessary for this series.
Please apply the derating curve shown in the chart according to the operating temperature.

Derating of Rated Current

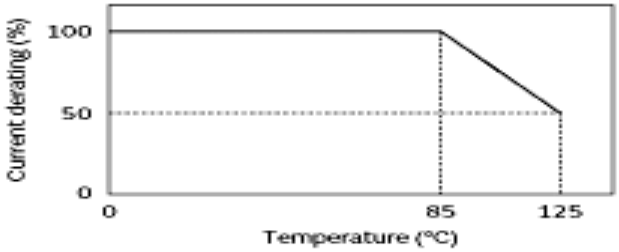

Attention
1.This datasheet is downloaded from the website of Murata Manufacturing Co., Ltd. Therefore, it's specifications are subject to change or our products in it may be discontinued without advance notice. Please check with our sales representatives or product engineers before ordering.
2.This datasheet has only typical specifications because there is no space for detailed specifications.
Therefore, please review our product specifications or consult the approval sheet for product specifications before ordering.

Note: This datasheet may be out of date.
Please download the latest datasheet of LQW15AN20NG8Z# from the official website of Murata Manufacturing Co., Ltd.
http://www.murata.com/en-US/products/productdetail?partno=LQW15AN20NG8Z%23

LQW15AN20NG8Z#

"#" indicates a package specification code.

Characteristic Data

The charts below may show another part number which shares its characteristics.

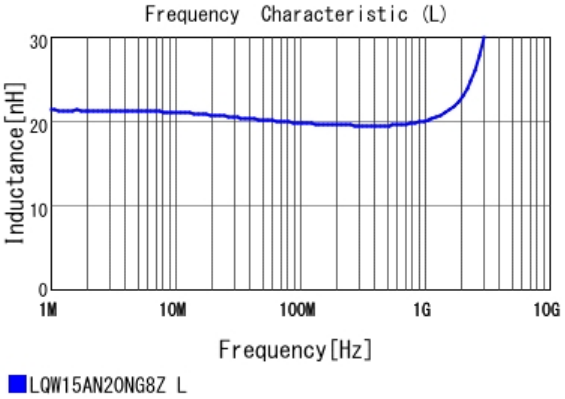

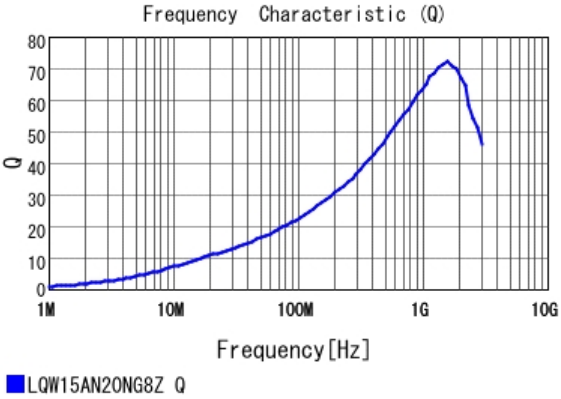

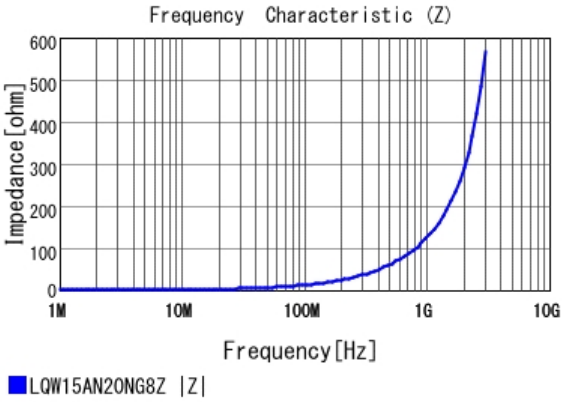

Attention
1.This datasheet is downloaded from the website of Murata Manufacturing Co., Ltd. Therefore, it's specifications are subject to change or our products in it may be discontinued without advance notice. Please check with our sales representatives or product engineers before ordering.
2.This datasheet has only typical specifications because there is no space for detailed specifications.
Therefore, please review our product specifications or consult the approval sheet for product specifications before ordering.