K2E220-RA38-09

AC centrifugal module - RadiCal

backward-curved, single-intake

with housing

ebm-papst Mulfingen GmbH & Co. KG
Bachmühle 2 · D-74673 Mulfingen
Phone +49 7938 81-0
Fax +49 7938 81-110
info1@de.ebmpapst.com
www.ebmpapst.com

Limited partnership · Headquarters Mulfingen
Amtsgericht (court of registration) Stuttgart · HRA 590344

General partner Elektrobau Mulfingen GmbH · Headquarters Mulfingen
Amtsgericht (court of registration) Stuttgart · HRB 590142

Nominal data

Type	**K2E220-RA38-09**
Motor	**M2E068-BF**

Phase		1~	1~	1~
Nominal voltage	VAC	230	230	230
Frequency	Hz	50	60	60
Method of obtaining data		ml	ml	ml
Valid for approval/standard		CE	CE	UL 2111
Speed (rpm)	min^{-1}	2100	2050	2050
Power consumption	W	88	107	116
Current draw	A	0.39	0.47	0.49
Capacitor	µF	2	2	2
Capacitor voltage	VDB	450	450	450
Capacitor standard		S0 (CE)	S0 (CE)	UL
Min. back pressure	Pa	0	0	0
Min. back pressure	in. wg	0	0	0
Min. ambient temperature	°C	-25	-25	-25
Max. ambient temperature	°C	50	60	60
Starting current	A	0.51	0.52	

ml = Max. load · me = Max. efficiency · fa = Free air · cs = Customer specification · ce = Customer equipment
Subject to change

AC centrifugal module - RadiCal

backward-curved, single-intake

with housing

Technical description

Weight	2 kg
Fan size	220 mm
Rotor surface	Painted black
Impeller material	PA plastic
Housing material	PA plastic
Guard grille material	PA plastic
Number of blades	7
Direction of rotation	Clockwise, viewed toward rotor
Degree of protection	IP44; installation- and position-dependent
Insulation class	"F"
Moisture (F) / Environmental (H) protection class	H1
Max. permitted ambient temp. for motor (transport/storage)	+ 80 °C
Min. permitted ambient temp. for motor (transport/storage)	- 40 °C
Installation position	Any
Mode	S1
Motor bearing	Ball bearing
Touch current according to IEC 60990 (measuring circuit Fig. 4, TN system)	< 0.75 mA
Electrical hookup	With plug
Motor protection	Thermal overload protector (TOP) internally connected
With cable	Variable
Protection class	I (with customer connection of protective earth)
Motor capacitor according to EN 60252-1 in safety protection class	S0
Conformity with standards	EN 60335-1; CE
Approval	UL 1004-3; CSA C22.2 No. 77

ebm-papst Mulfingen GmbH & Co. KG · Bachmühle 2 · D-74673 Mulfingen · Phone +49 (0) 7938 81-0 · Fax +49 (0) 7938 81-110 · info1@de.ebmpapst.com · www.ebmpapst.com

AC centrifugal module - RadiCal

backward-curved, single-intake

with housing

Product drawing

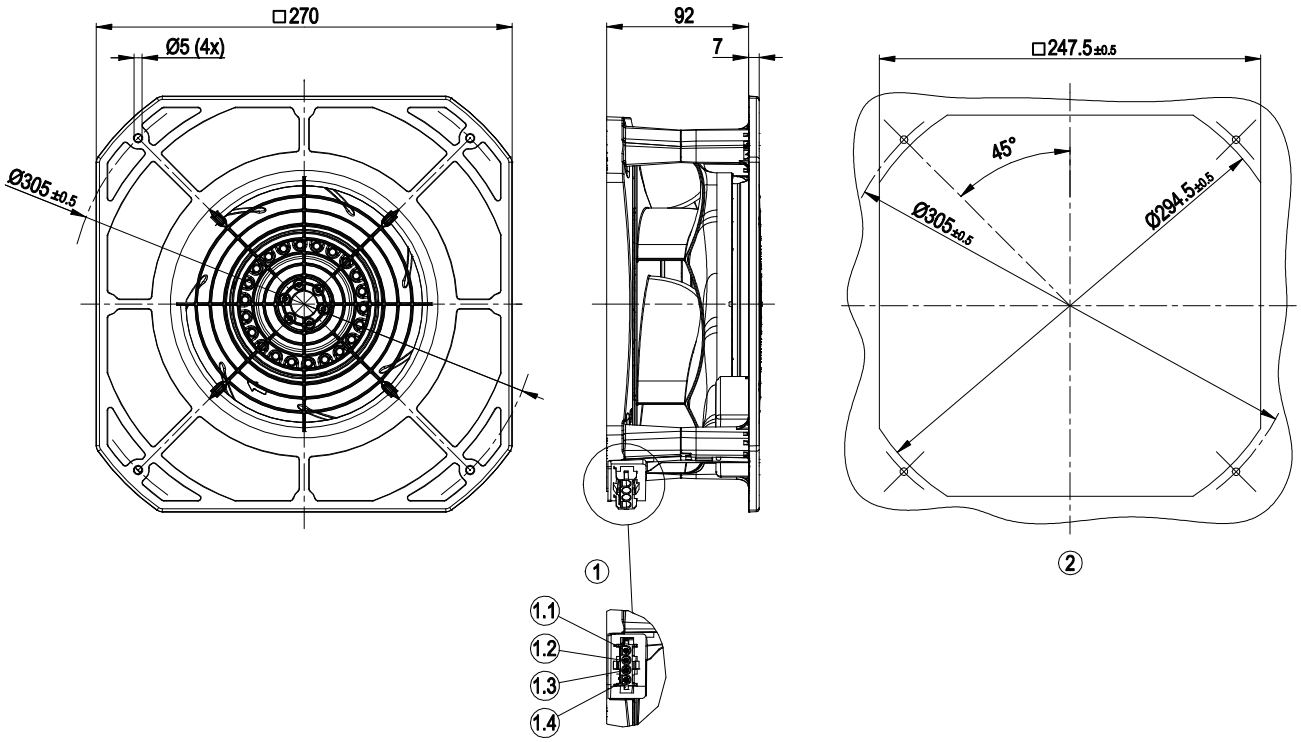

1	tyco coded plug system
	4-pole connector housing tyco 926305-7
	4x plug pin tyco 926 885-1
	Mating connector (not included in scope of delivery):
	4-pole connector housing tyco 926298-6
	4x socket Tyco 926 884-1
1.1	PE
1.2	L
1.3	N + capacitor
1.4	Capacitor
	(capacitor wired internally)
2	Mounting dimensions

ebm-papst Mulfingen GmbH & Co. KG · Bachmühle 2 · D-74673 Mulfingen · Phone +49 (0) 7938 81-0 · Fax +49 (0) 7938 81-110 · info1@de.ebmpapst.com · www.ebmpapst.com

AC centrifugal module - RadiCal

backward-curved, single-intake

with housing

Connection diagram

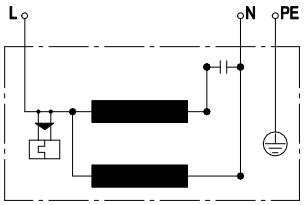

L	blue	N	black	PE	green/yellow

ebm-papst Mulfingen GmbH & Co. KG · Bachmühle 2 · D-74673 Mulfingen · Phone +49 (0) 7938 81-0 · Fax +49 (0) 7938 81-110 · info1@de.ebmpapst.com · www.ebmpapst.com

AC centrifugal module - RadiCal

backward-curved, single-intake

with housing

Curves: Air performance 50 Hz

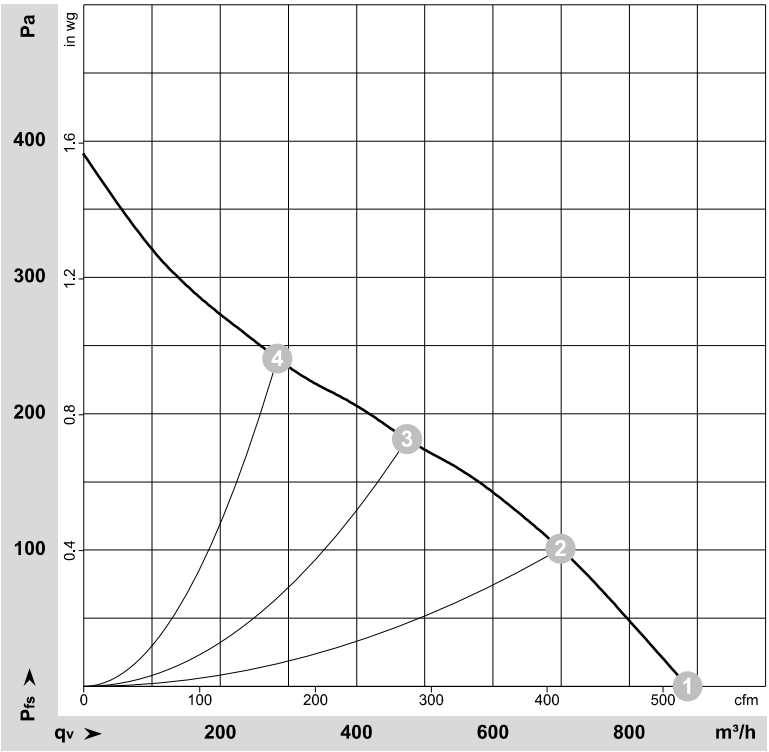

ρ = 1.15 kg/m³ ± 2 %

Measurement: LU-130008-1

Air performance measured according to ISO 5801 installation category A. For detailed information on the measurement setup, contact ebm-papst. Intake sound level: Sound power level according to ISO 13347 / sound pressure level measured at 1 m distance from fan axis. The values given are valid under the specified measuring conditions and may vary due to conditions of installation. For deviations from the standard configuration, the parameters have to be checked on the installed unit.

Measured values

	U	f	n	P_e	I	LpA_{in}	LwA_{in}	q_V	p_{fs}	q_V	p_{fs}
	V	Hz	min^{-1}	W	A	dB(A)	dB(A)	m³/h	Pa	cfm	in. wg
1	230	50	2350	80	0.36	59	68	885	0	520	0.00
2	230	50	2230	86	0.38	54	62	700	100	410	0.40
3	230	50	2100	88	0.39	52	60	475	180	280	0.72
4	230	50	2205	86	0.38	55	64	285	240	165	0.96

U = Power supply · f = Frequency · n = Speed (rpm) · P_e = Power consumption · I = Current draw · LpA_{in} = Sound pressure level intake side · LwA_{in} = Sound power level intake side
q_V = Air flow · p_{fs} = Pressure increase

ebm-papst Mulfingen GmbH & Co. KG · Bachmühle 2 · D-74673 Mulfingen · Phone +49 (0) 7938 81-0 · Fax +49 (0) 7938 81-110 · info1@de.ebmpapst.com · www.ebmpapst.com

AC centrifugal module - RadiCal

backward-curved, single-intake

with housing

Curves: Air performance 60 Hz

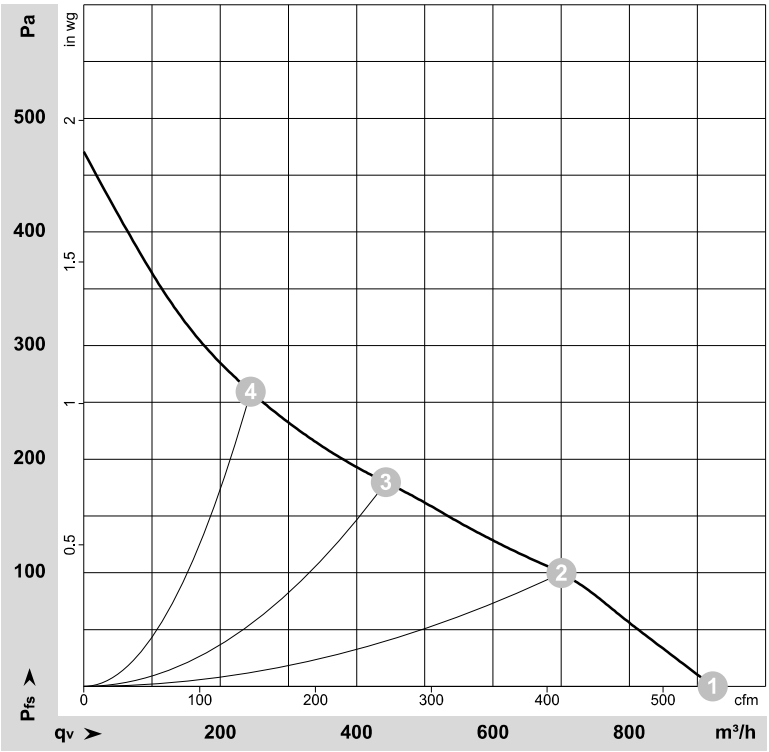

ρ = 1.15 kg/m³ ± 2 %

Measurement: LU-130009-1

Air performance measured according to ISO 5801 installation category A. For detailed information on the measurement setup, contact ebm-papst. Intake sound level: Sound power level according to ISO 13347 / sound pressure level measured at 1 m distance from fan axis. The values given are valid under the specified measuring conditions and may vary due to conditions of installation. For deviations from the standard configuration, the parameters have to be checked on the installed unit.

Measured values

	U	f	n	P_e	I	LpA_{in}	LwA_{in}	q_V	p_{fs}	q_V	p_{fs}
	V	Hz	min^{-1}	W	A	dB(A)	dB(A)	m³/h	Pa	cfm	in. wg
1	230	60	2450	102	0.46	60	69	920	0	545	0.00
2	230	60	2210	106	0.46	54	62	700	100	410	0.40
3	230	60	2050	107	0.47	51	60	445	180	260	0.72
4	230	60	2235	105	0.45	56	65	245	260	145	1.04

U = Power supply · f = Frequency · n = Speed (rpm) · P_e = Power consumption · I = Current draw · LpA_{in} = Sound pressure level intake side · LwA_{in} = Sound power level intake side
q_V = Air flow · p_{fs} = Pressure increase

ebm-papst Mulfingen GmbH & Co. KG · Bachmühle 2 · D-74673 Mulfingen · Phone +49 (0) 7938 81-0 · Fax +49 (0) 7938 81-110 · info1@de.ebmpapst.com · www.ebmpapst.com