IXYS

		V_{CES}	I_{C25}	$V_{CE(sat)}$
Low $V_{CE(sat)}$ IGBT	**IXGH/IXGM 17 N100**	**1000 V**	**34 A**	**3.5 V**
High speed IGBT	**IXGH/IXGM 17 N100A**	**1000 V**	**34 A**	**4.0 V**

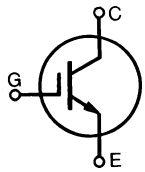

Symbol	Test Conditions	Maximum Ratings	
V_{CES}	T_J = 25°C to 150°C	1000	V
V_{CGR}	T_J = 25°C to 150°C; R_{GE} = 1 MΩ	1000	V
V_{GES}	Continuous	±20	V
V_{GEM}	Transient	±30	V
I_{C25}	T_C = 25°C	34	A
I_{C90}	T_C = 90°C	17	A
I_{CM}	T_C = 25°C, 1 ms	68	A
SSOA (RBSOA)	V_{GE}= 15 V, T_{VJ} = 125°C, R_G = 82 Ω Clamped inductive load, L = 300 µH	I_{CM} = 34 @ 0.8 V_{CES}	A
P_C	T_C = 25°C	150	W
T_J		-55 ... +150	°C
T_{JM}		150	°C
T_{stg}		-55 ... +150	°C
M_d	Mounting torque (M3)	1.13/10	Nm/lb.in.
Weight		TO-204 = 18 g, TO-247 = 6 g	
Maximum lead temperature for soldering 1.6 mm (0.062 in.) from case for 10 s		300	°C

Symbol	Test Conditions		Characteristic Values (T_J = 25°C, unless otherwise specified) min.	typ.	max.	
BV_{CES}	I_C = 3 mA, V_{GE} = 0 V		1000			V
$V_{GE(th)}$	I_C = 250 µA, V_{CE} = V_{GE}		2.5		5	V
I_{CES}	V_{CE} = 0.8 • V_{CES} V_{GE} = 0 V	T_J = 25°C T_J = 125°C			250 1	µA mA
I_{GES}	V_{CE} = 0 V, V_{GE} = ±20 V				±100	nA
$V_{CE(sat)}$	I_C = I_{C90}, V_{GE} = 15 V	17N100 17N100A			3.5 4.0	V V

TO-247 AD (IXGH)

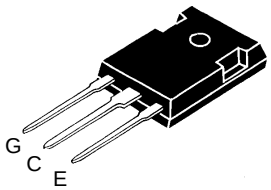

TO-204 AE (IXGM)

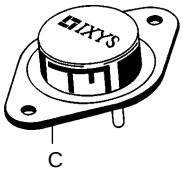

G = Gate, C = Collector,
E = Emitter, TAB = Collector

Features
- International standard packages
- 2nd generation HDMOS™ process
- Low $V_{CE(sat)}$
  - for low on-state conduction losses
- High current handling capability
- MOS Gate turn-on
  - drive simplicity
- Voltage rating guaranteed at high temperature (125°C)

Applications
- AC motor speed control
- DC servo and robot drives
- DC choppers
- Uninterruptible power supplies (UPS)
- Switch-mode and resonant-mode power supplies

Advantages
- Easy to mount with 1 screw (TO-247) (isolated mounting screw hole)
- High power density

© 1996 IXYS All rights reserved

http://store.iiic.cc/

Symbol	Test Conditions		Characteristic Values (T_J = 25°C, unless otherwise specified) min.	typ.	max.	
g_{fs}	$I_C = I_{C90}$; V_{CE} = 10 V, Pulse test, t ≤ 300 µs, duty cycle ≤ 2 %		6	15		S
C_{ies}	V_{CE} = 25 V, V_{GE} = 0 V, f = 1 MHz			1500		pF
C_{oes}				175		pF
C_{res}				40		pF
Q_g	$I_C = I_{C90}$, V_{GE} = 15 V, V_{CE} = 0.5 V_{CES}			100	120	nC
Q_{ge}				20	30	nC
Q_{gc}				60	90	nC
$t_{d(on)}$	**Inductive load, T_J = 25°C**			100		ns
t_{ri}	$I_C = I_{C90}$, V_{GE} = 15 V, L = 300 µH,			200		ns
$t_{d(off)}$	V_{CE} = 0.8 V_{CES}, $R_G = R_{off}$ = 82 Ω			500	1000	ns
t_{fi}	Remarks: Switching times may increase	17N100		750		ns
	for V_{CE} (Clamp) > 0.8 • V_{CES},	17N100A		450	750	ns
E_{off}	higher T_J or increased R_G	17N100A		3		mJ
$t_{d(on)}$	**Inductive load, T_J = 125°C**			100		ns
t_{ri}	$I_C = I_{C90}$, V_{GE} = 15 V, L = 300 µH			200		ns
E_{on}	V_{CE} = 0.8 V_{CES}, $R_G = R_{off}$ = 82 Ω			2.5		mJ
$t_{d(off)}$	Remarks: Switching times			700	1000	ns
t_{fi}	may increase	17N100		1200	2000	ns
	for V_{CE} (Clamp) > 0.8 • V_{CES},	17N100A		750	1000	ns
E_{off}	higher T_J or increased R_G	17N100		8		mJ
		17N100A		6		mJ
R_{thJC}					0.83	K/W
R_{thCK}				0.25		K/W

IXGH 17N100 and IXGH 17N100 A characteristic curves are located on the IXGH 17N100U1 and IXGH 17N100AU1 data sheets.

TO-247 AD Outline

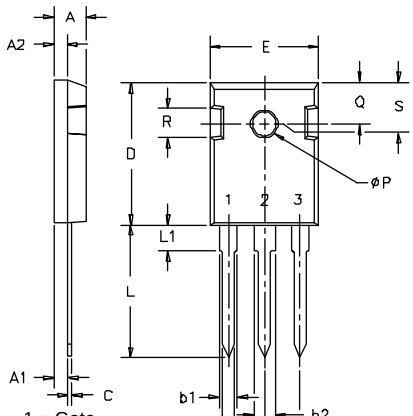

1 = Gate
2 = Collector
3 = Emitter
Tab = Collector

SYM	INCHES MIN	INCHES MAX	MILLIMETERS MIN	MILLIMETERS MAX
A	.185	.209	4.7	5.3
A_1	.087	.102	2.2	2.54
A_2	.059	.098	2.2	2.6
b	.040	.055	1.0	1.4
b_1	.065	.084	1.65	2.13
b_2	.113	.123	2.87	3.12
C	.016	.031	.4	.8
D	.819	.845	20.80	21.46
E	.610	.640	15.75	16.26
e	.215 BSC		5.45 BSC	
L	.780	.800	19.81	20.32
L1		.177		4.50
øP	.140	.144	3.55	3.65
Q	.212	.244	5.4	6.2
R	.170	.216	4.32	5.49
S	.242 BSC		6.15 BSC	

TO-204AE Outline

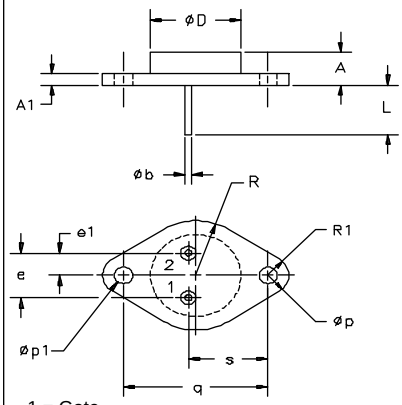

1 = Gate
2 = Emitter
Case = Collector

SYM	INCHES MIN	INCHES MAX	MILLIMETERS MIN	MILLIMETERS MAX
A	.250	.450	6.4	11.4
A1	.060	.135	1.53	3.42
øb	.057	.063	1.45	1.60
øD		.875		22.22
e	.420	.440	10.67	11.17
e1	.205	.225	5.21	5.71
L	.440	.480	11.18	12.19
øp	.151	.165	3.84	4.19
øp1	.151	.165	3.84	4.19
q	1.187 BSC		30.15 BSC	
R	.495	.525	12.58	13.33
R1	.131	.188	3.33	4.77
s	.655	.675	16.64	17.14

IXYS reserves the right to change limits, test conditions, and dimensions.

IXYS MOSFETS and IGBTs are covered by one or more of the following U.S. patents: 4,835,592 4,881,106 5,017,508 5,049,961 5,187,117 5,486,715 4,850,072 4,931,844 5,034,796 5,063,307 5,237,481 5,381,025

http://store.iiic.cc/