Latching Relay
G7K

CSM_G7K_DS_E_2_1

Compact Mechanical Lock Latching Relays with Manual Buttons

- Compact design with a height of 71 mm, width of 42.5 mm, and depth of 48.5 mm.
  Plus, one Relay only weighs 175 g.
- Quick set and reset response through pulse signals.
- Gold-plated contacts for high contact reliability.
- Compatible with OMRON's PTF14A (for LY4 Relays) Sockets.

⚠ **Refer to the *Common Relay Precautions*.**

Model Number Structure

Model Number Legend

G7K-□□□□
1 2 3 4

1. Number of Poles
4: 4-pole (DPDT/DPST-NO)

2. Contact Configuration
1: Single contacts

3. Protective Structure
2: Encased

4. Terminal Shape
S: Relays with Plug-in Terminals

Ordering Information

List of Models

Models with Plug-in Terminals

Contact configuration / Classification	DPDT, DPST-NO	
	Model	Rated voltage (V)
Standard models	G7K-412S	24, 100, 110, 200, or 220 VAC
		24, 48, 100, 110, or 125 VDC

Note: Models are also available with built-in diodes for reverse voltage absorption. Contact your OMRON representative for details.

Options (Order Separately)

Model name	Model
Front-mounting Sockets	PTF14A
Hold-down Clips	PKC

Note: The above products must be ordered in sets of 10.

Ratings and Specifications

Ratings

Operating Coil

Item / Rated voltage (V)		Rated current (mA) 50 Hz	Rated current (mA) 60Hz	Coil resistance (Ω)	Set voltage (V)	Reset voltage (V)	Maximum voltage (V)	Power consumption (VA, W)
					Percentage of rated voltage			
AC	24	94.6	84.3	86	80% max.	80% max.	110% (115% 3h)	Approx. 2
	100	22.7	20.2	1,470				
	110	20.3	18.2	2,000				
	200	11.1	9.9	6,340				
	220	10.4	9.2	7,190				
DC	24		36.5	660			110% (130% 3h)	Approx. 0.9
	48		18.4	2,610				
	100		8.9	11,300				
	110		8.4	13,000				
	125		7.1	17,700				

Note:
1. The rated current and coil resistance are measured at a coil temperature of 23°C with tolerances of +15%/–20% for the AC rated current and ±15% for the DC coil resistance.
2. The AC coil resistance is a reference value only.
3. Operating characteristics were measured at a coil temperature of 23°C.
4. The maximum allowable voltage is the maximum value of the allowable voltage fluctuation range for the Relay coil operating power supply and was measured at an ambient temperature of 23°C. There is no continuous allowance.

Contacts

Item / Model	G7K-412S	
Load	Resistive load	Inductive load (cos ϕ = 0.4, L/R = 7 ms)
Contact structure	Single	
Contact materials	Au plating + Ag	
Rated load	3 A at 220 VAC, 1 A at 110 VDC	1 A at 220 VAC, 1 A at 30 VDC
Rated carry current	3 A	
Maximum contact voltage	250 VAC, 125 VDC	
Maximum contact current	3 A	
Maximum switching capacity (reference value)	660 VA 110 W	220 VA 30 W

Characteristics

Contact resistance*1		50 mΩ max.
Set*2	Time	30 ms max.
	Minimum pulse width	100 ms
Reset*2	Time	30 ms max.
	Minimum pulse width	100 ms
Maximum operating frequency	Mechanical	1,800 operations/hr
	Rated load	1,800 operations/hr
Insulation resistance*3		100 MΩ min.
Dielectric strength	Between contacts of the same polarity	1,500 VAC at 50/60 Hz for 1 min.
	Between contacts of different polarity	2,000 VAC at 50/60 Hz for 1 min.
	Between coil and contacts	2,000 VAC at 50/60 Hz for 1 min.
	Between set/reset coils	2,000 VAC at 50/60 Hz for 1 min.
Vibration resistance	Destruction	10 to 55 to 10 Hz, 0.375-mm single amplitude (0.75-mm double amplitude)
	Malfunction	10 to 22 to 10 Hz, 0.5-mm single amplitude (1.0-mm double amplitude)
Shock resistance	Destruction	300 m/s²
	Malfunction	30 m/s²
Endurance	Mechanical	300,000 operations min. (operating frequency: 1,800 operations/hr)
	Electrical*4	100,000 operations min. (operating frequency: 1,800 operations/hr)
Failure rate M value (reference value*5)		10 mA at 5 VDC
Ambient operating temperature		–10 to 55°C (with no icing or condensation)
Ambient operating humidity		5% to 85%
Weight		Approx. 175 g

Note: The above values are initial values.
*1. Measurement conditions: 10 mA at 1 VDC using the voltage drop method
*2. Measurement conditions: With rated operating power applied, not including contact bounce.
*3. Measurement conditions: For 500 VDC applied to the same location as for dielectric strength measurement.
*4. Ambient temperature condition: 23°C
*5. This value was measured at a switching frequency of 60 operations per minute.

Engineering Data

Maximum Switching Capacity

G7K-412S

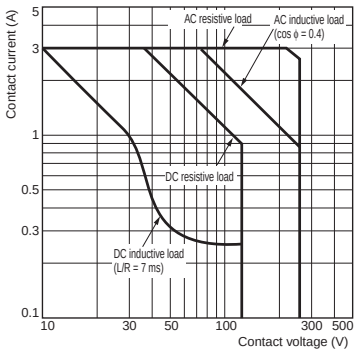

Ambient Temperature and the Set and Reset Voltages

G7K AC (60 Hz)

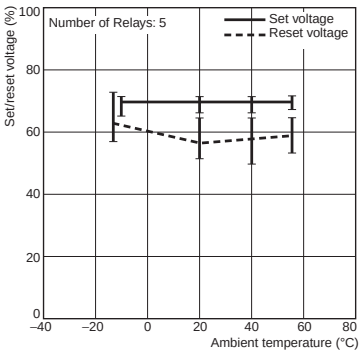

Ambient Temperature vs. Coil Temperature Rise

G7K 100 VAC (50 Hz)

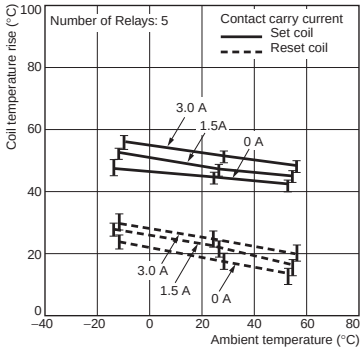

Endurance Curve

G7K-412S

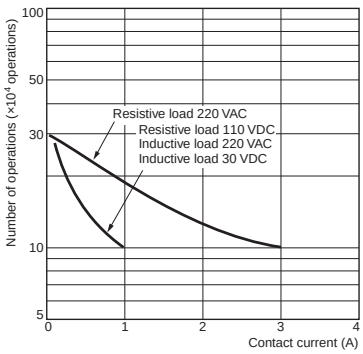

G7K DC

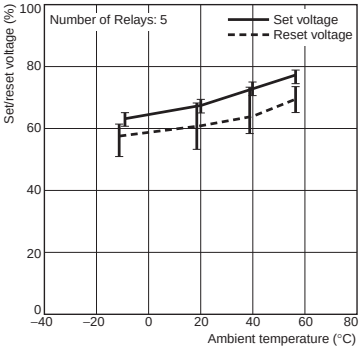

G7K DC

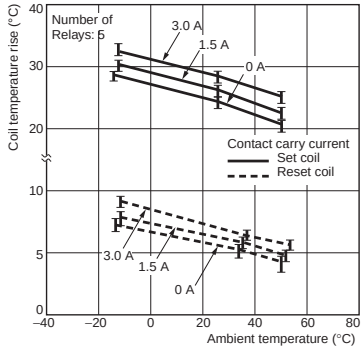

Malfunctioning Shock

G7K-412S 100 VAC

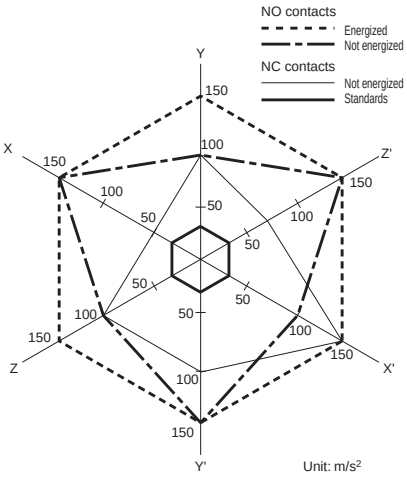

N = 3

Measurement: Shock was applied 3 times each in 6 directions along 3 axes with the Relay set and reset to check the shock values that cause the Relay to malfunction.

Criteria: 30 m/s²

Vibration Resistance Unintended Operation Vibration)

NC contact (non-energized)
NO contact (non-energized)
NO contact (energized)

G7K-412S 100 VAC

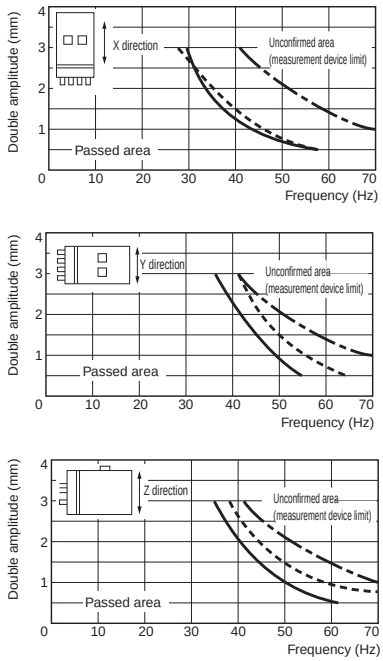

N = 5

Measurement: Vibration was applied for 10 minutes each in 3 directions along 3 axes with the Relay set and reset to check the vibration frequency and amplitude values that cause the Relay to malfunction.

Criteria: 10 to 22 to 10 Hz, 0.5-mm single amplitude (1.0-mm double amplitude) vibrations must not cause error in operation.

Dimensions

(Unit: mm)

List of Models

G7K-412S

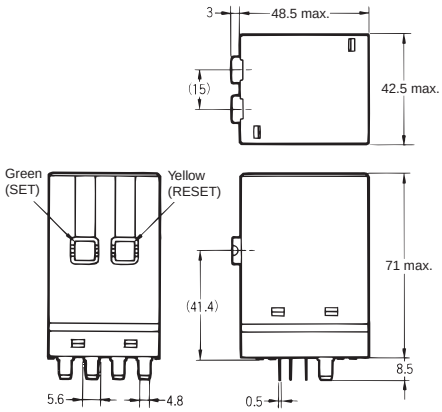

Terminal Arrangement/Internal Connections (Bottom View)

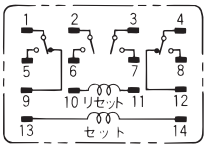

(The set and reset coils have no coil polarity.)

Connection Sockets

(Refer to *Common Socket and DIN Track Products* for external dimensions.

Sockets / Model	Front-mounting Sockets	
G7K-412S	PTF14A 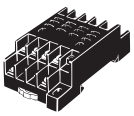	PTF14A-E 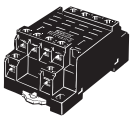

Relay Hold-down Clips

(Refer to *Common Socket and DIN Track Products* for external dimensions.

Secure the Relay with the Hold-down Clips to prevent the Relay from falling out due to vibration or shock.

PKC

Connection Sockets (Sold Separately)

PTF14A

Front-mounting Sockets

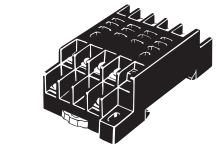

Track or screw mounting

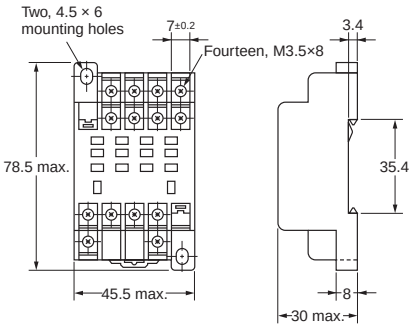

PKC Hold-down Clips

Terminal Arrangement/Internal Con-

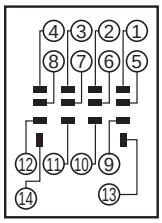

Mounting Hole Dimensions

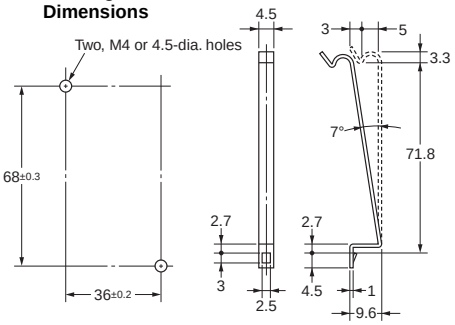

Mounting Height with Sockets

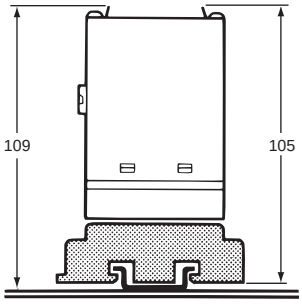

PTF14A

Note:
1. PTF14A Sockets have a rating of 10 A at 240 V max., but the G7K-412S has a carry current of 3 A. Use the Sockets within the contact ratings.
2. Use the PKC1 Hold-down Clips (2 per set) for the G7K and PTF14A.
3. Insert the Hold-down Clips into the PTF14A Socket and confirm that the Hold-down Clips cannot be pulled out before using them.
4. The set and reset buttons have different colors for easy identification.
   Set button: Green
   Reset button: Yellow
5. If you use screws to secure the connection to a Front-mounting Socket, either use appropriate connection terminals, such as a crimp terminals, or be sure to tighten the screws securely so that the wiring is not loose.
   The proper tightening torque is 0.78 to 1.18 N·m.
6. Allow suitable slack on leads when wiring, and do not subject the terminals to excessive force (2 N or more). Prepare the terminals properly and make sure that there are no whiskers that could cause short circuits.

Safety Precautions

Refer to the *Common Relay Precautions* for precautions that apply to all Relays.

Precautions for Correct Use

Installation

- Mount a Relay so that the operation confirmation button is facing up.
- Operation errors can occur if heat is not dissipated smoothly from the Relay. Therefore, when mounting two or more Relays parallel to each other, stagger each one by 20 mm vertically and 15 mm horizontally to create enough space for heat dissipation.

Circuit Conditions

- You cannot use your own contacts to degauss set and reset coils or use the Relays in self-degaussing circuits. (Figure 1 and Figure 2)

Figure 1

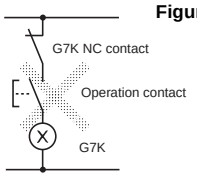

Figure 2

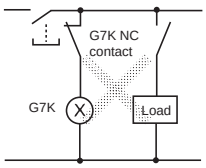

- Do not apply a voltage to the set and reset coils at the same time. If you apply a voltage to both coils simultaneously, the Relay will be set.
- There is usually no reason to use a Latching Relay with a constant current flow because the Relay can be latched with a single pulse. Using only a single pulse is also beneficial to reduce power consumption.
- NC contacts may open for a few milliseconds when the reset coil is turned ON or OFF. NO contact may also open when a set coil in the set state turns ON or OFF. Consider this in your circuit designs. (Figure 3)

Figure 3

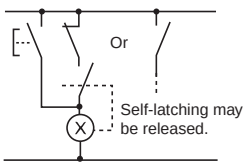

- DC load operation can produce a blue-green corrosion inside the Relay case. Be careful when performing maintenance during application.
- The minimum pulse width is 100 ms, but the recommended width is approx. 1 s min.

Test Buttons

- Be careful when operating the manual test buttons. Be careful not to press the test button by mistake because the contacts will go ON if the test button is pressed.
- Use the test button for test purposes only.
- Press the green test button to set the Relay. Press the yellow test button to reset the Relay.

Terms and Conditions Agreement

Read and understand this catalog.
Please read and understand this catalog before purchasing the products. Please consult your OMRON representative if you have any questions or comments.

Warranties.
(a) Exclusive Warranty. Omron's exclusive warranty is that the Products will be free from defects in materials and workmanship for a period of twelve months from the date of sale by Omron (or such other period expressed in writing by Omron). Omron disclaims all other warranties, express or implied.
(b) Limitations. OMRON MAKES NO WARRANTY OR REPRESENTATION, EXPRESS OR IMPLIED, ABOUT NON-INFRINGEMENT, MERCHANTABILITY OR FITNESS FOR A PARTICULAR PURPOSE OF THE PRODUCTS. BUYER ACKNOWLEDGES THAT IT ALONE HAS DETERMINED THAT THE
PRODUCTS WILL SUITABLY MEET THE REQUIREMENTS OF THEIR INTENDED USE.
Omron further disclaims all warranties and responsibility of any type for claims or expenses based on infringement by the Products or otherwise of any intellectual property right. (c) Buyer Remedy. Omron's sole obligation hereunder shall be, at Omron's election, to (i) replace (in the form originally shipped with Buyer responsible for labor charges for removal or replacement thereof) the non-complying Product, (ii) repair the non-complying Product, or (iii) repay or credit Buyer an amount equal to the purchase price of the non-complying Product; provided that in no event shall Omron be responsible for warranty, repair, indemnity or any other claims or expenses regarding the Products unless Omron's analysis confirms that the Products were properly handled, stored, installed and maintained and not subject to contamination, abuse, misuse or inappropriate modification. Return of any Products by Buyer must be approved in writing by Omron before shipment. Omron Companies shall not be liable for the suitability or unsuitability or the results from the use of Products in combination with any electrical or electronic components, circuits, system assemblies or any other materials or substances or environments. Any advice, recommendations or information given orally or in writing, are not to be construed as an amendment or addition to the above warranty.
See http://www.omron.com/global/ or contact your Omron representative for published information.

Limitation on Liability; Etc.
OMRON COMPANIES SHALL NOT BE LIABLE FOR SPECIAL, INDIRECT, INCIDENTAL, OR CONSEQUENTIAL DAMAGES, LOSS OF PROFITS OR PRODUCTION OR COMMERCIAL LOSS IN ANY WAY CONNECTED WITH THE PRODUCTS, WHETHER SUCH CLAIM IS BASED IN CONTRACT, WARRANTY, NEGLIGENCE OR STRICT LIABILITY.
Further, in no event shall liability of Omron Companies exceed the individual price of the Product on which liability is asserted.

Suitability of Use.
Omron Companies shall not be responsible for conformity with any standards, codes or regulations which apply to the combination of the Product in the Buyer's application or use of the Product. At Buyer's request, Omron will provide applicable third party certification documents identifying ratings and limitations of use which apply to the Product. This information by itself is not sufficient for a complete determination of the suitability of the Product in combination with the end product, machine, system, or other application or use. Buyer shall be solely responsible for determining appropriateness of the particular Product with respect to Buyer's application, product or system. Buyer shall take application responsibility in all cases.
NEVER USE THE PRODUCT FOR AN APPLICATION INVOLVING SERIOUS RISK TO LIFE OR PROPERTY OR IN LARGE QUANTITIES WITHOUT ENSURING THAT THE SYSTEM AS A WHOLE HAS BEEN DESIGNED TO ADDRESS THE RISKS, AND THAT THE OMRON PRODUCT(S) IS PROPERLY RATED AND INSTALLED FOR THE INTENDED USE WITHIN THE OVERALL EQUIPMENT OR SYSTEM.

Programmable Products.
Omron Companies shall not be responsible for the user's programming of a programmable Product, or any consequence thereof.

Performance Data.
Data presented in Omron Company websites, catalogs and other materials is provided as a guide for the user in determining suitability and does not constitute a warranty. It may represent the result of Omron's test conditions, and the user must correlate it to actual application requirements. Actual performance is subject to the Omron's Warranty and Limitations of Liability.

Change in Specifications.
Product specifications and accessories may be changed at any time based on improvements and other reasons. It is our practice to change part numbers when published ratings or features are changed, or when significant construction changes are made. However, some specifications of the Product may be changed without any notice. When in doubt, special part numbers may be assigned to fix or establish key specifications for your application. Please consult with your Omron's representative at any time to confirm actual specifications of purchased Product.

Errors and Omissions.
Information presented by Omron Companies has been checked and is believed to be accurate; however, no responsibility is assumed for clerical, typographical or proofreading errors or omissions.

2013.6

In the interest of product improvement, specifications are subject to change without notice.

OMRON Corporation
Industrial Automation Company

http://www.ia.omron.com/

(c)Copyright OMRON Corporation 2013 All Right Reserved.