MALE END VIEW	BOARD LAYOUT	TYPICAL PANEL CUTOUT

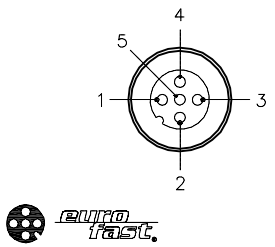

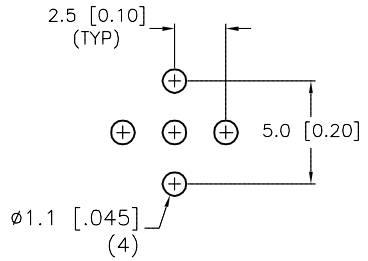

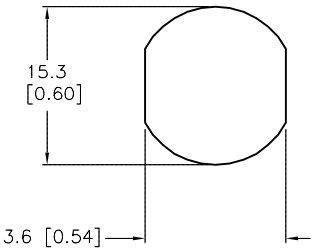

SPECIFICATIONS

CONTACT CARRIER MATERIAL/COLOR	NYLON OR TPU/YELLOW
CONTACT MATERIAL/PLATING	BRASS/GOLD
HOUSING/LOCKNUT MATERIAL/PLATING	BRASS/NICKEL
RATED CURRENT [A]	4.0 A
RATED VOLTAGE [V]	250 V
NUMBER OF CONDUCTORS [AWG]	5 PRINTED CIRCUIT PINS
TEMPERATURE RATING	−40°C to +105°C (−40°F to +221°F)
PROTECTION CLASS	MEETS NEMA 1,3,4,6P AND IEC IP68
MAX. PANEL THICKNESS	3.0 [0.12]

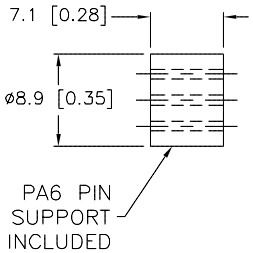

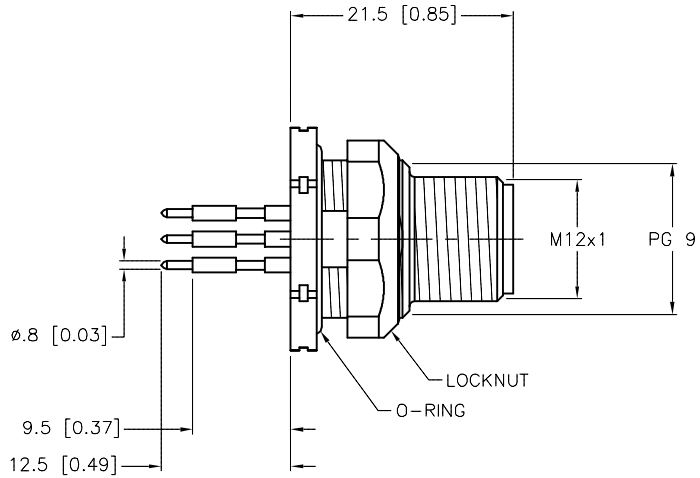

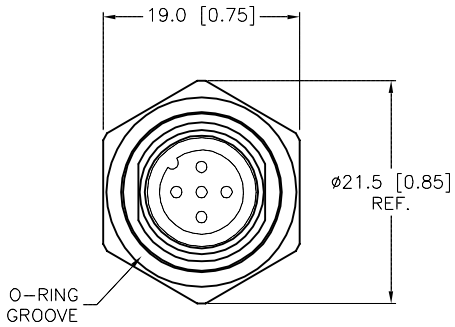

END VIEW
LOCKNUT NOT SHOWN

SOURCE DRAWING - FOR REFERENCE ONLY

NOTES:

1. "/CS10402" DESIGNATES POTTING MATERIAL TO NOT EXTEND OUT OF THE HOUSING.

REV	DESCRIPTION	BY	DATE	ECO NO.
B	DRAWING PROCESSED AS PART OF ECO 33971	CBM	04/07/11	33971

RELATED DOCUMENTS
1.
2.
3.
4.

3RD ANGLE PROJECTION

THIS DRAWING IS CONFIDENTIAL AND THE PROPERTY OF TURCK INC. USE OF THIS DOCUMENT WITHOUT WRITTEN PERMISSION IS PROHIBITED.

TURCK INC
High Technology Sensors and Automation Controls
3000 CAMPUS DRIVE
MINNEAPOLIS, MN 55441
1-800-544-7769
(763) 553-7300
(763) 553-0708 fax
turck.com

MATERIAL: SEE SPECIFICATIONS

FINISH: SEE SPECIFICATIONS

ALL DIMENSIONS DISPLAYED ON THIS DRAWING ARE FOR REFERENCE ONLY

CONTACT TURCK FOR MORE INFORMATION

DRFT: RDS | DATE: 02/22/07
APVD: | SCALE: 1=.8

UNIT OF MEASUREMENT
MILLIMETER [INCH]
DO NOT SCALE THIS DRAWING

DESCRIPTION: FSFD 4.5/CS10402

IDENTIFICATION NO.: U0876-65 | REV: B

FILE: U0876-65 | SHEET 1 OF 1