PHE426MD6470JR06L2

aka F426DT474J630C PHE426MD6470JD16R06L2

Capacitor, film, 0.47 uF, +/-5% Tol, -55/+105C, General Purpose, 630V@85C, Lead Spacing=22.5 mm

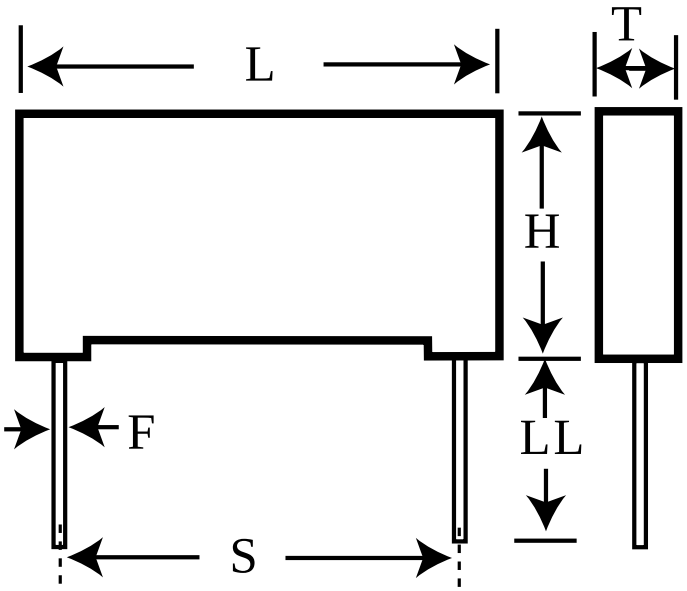

Dimensions (mm)

ID	Dimension	Tolerance
L	26	max
H	21.5	max
T	11	max
S	22.5	+/-0.4
LL	6	nom
F	0.8	nom

Specifications

Manufacturer:	KEMET
Brand:	Rifa
Capacitance:	0.47 uF
Temperature Range:	-55/+105C
Rated Temperature:	85C
Voltage @ rated temp:	630V
Voltage AC:	250VAC
Tolerance:	+/-5%
Body Type:	Radial Box
Construction:	Wound
Application:	General Purpose
Sub Application:	Pulse
Dissipation Factor @ 1 kHz:	0.05%
Dissipation Factor @ 10 kHz:	0.1%
Insulation Resistance:	63.83 GOhm
Inductance:	6 nH
Maximum dVdT:	200v/us
Miscellaneous Electrical:	IEC 60384-16, 1.1; Rthha [85C/2.m/s] = 40 C/W series(PHE426)
Package Kind:	Bulk
Package Type:	Tray
Package Quantity:	253

© 2006-2012 IntelliData.net

Statements of suitability for certain applications are based on our knowledge of typical operating conditions for such applications, but are not intended to constitute - and we specifically disclaim - any warranty concerning suitability for a specific customer application or use. This Information is intended for use only by customers who have the requisite experience and capability to determine the correct products for their application. Any technical advice inferred from this Information or otherwise provided by us with reference to the use of our products is given gratis, and we assume no obligation or liability for the advice given or results obtained.