FARNELL INST UK

Issue No. : 20100197
Date of issue : Mar 08,2010
Classification : ■ New ☐ Change

# PRODUCT SPECIFICATION FOR APPROVAL

Product Description : LIGHT TOUCH SWITCH
Product Part Number : (Panasonic Part Number : EVQQ2503W )
Country of Origin : Malaysia (It is indicated in the packing label with English)
Applications : It depends on 1.2"Application Limits"

*If you approve this specification, please fill in and sign the below and return 1 copy to us.

Approval No. :
Approval Date:
Executed by :

(Signature)

Title :
Dept. :

Issued by : Technical Section

Panasonic Electronic Devices Malaysia Sdn. Bhd.
(013394-M)

Shah Alam
No.1 Jalan Jemuju 16/13,
40200 Shah Alam, Selangor, Malaysia.
P.O.Box 7720, Pejabat Pos Besar Shah Alam,
40724 Shah Alam, Selangor, Malaysia.

Prepared by :
Signature
Name (Print) Siti Aminah

Checked by: :
Signature
Name (Print) M.L. Chia

Approved by :
Signature
Name (Print) K.Y. Woon
Title Team leader

Panasonic

1. Notification Items

1.1 Law and the regulation which are applied

①This product has not been manufactured with ozone depleting chemical controlled under the Montreal Protocol.

②This product complies with the RoHS Directive (Restriction of the use of certain Hazardous Substance) in electical and electronic equipment (DIRECTIVE 2002/95/EC).

③All the materials used in this part are registered material under the Law Concerning the Examination and Regulation of Manufacture etc. or Chemical Substances.

④Permission must be obtained from the Japanese government if the product that is subject to the "Foreign Exchange and Foreign Trade Law" is to be exported or taken out of Japan.

1.2 Application Limits

This product was designed and manufactured for general electronics devices household appliances, office equipment, data and communication equipment.
For the following applications in which high reliability and safety are required, or for the applications in which the failure or malfunction of the products may directly jeopardize life or cause threat of personal asset, please contact us beforehand.

・Aircraft and aerospace equipment, anti-disaster or anti-crime equipment, medical equipment, transport equipment(automotives, trains, boat etc), high public information processing devices or the other equipments or devices that are equivalent to the above mentioned.

1.3 Handling of approval specification

・Writings in this specification form are subject to change through precautions.
・This specification form specify this item only. Please perform your approval test in the actual application conditions beforehand.

1.4 Manufacturing Sites

① The country of manufacture : Malaysia
Panasonic Electronic Devices Malaysia Sdn. Bhd.

2. Summary

2.1 This specifications applies to the following types of switch.
Push-ON type S.P.S.T

2.2 This specifications is a constituent document of contract for business concluded between your company and Panasonic Corporation.

2.3 Items not particularly specified in this specifications shall be in conformance with JIS Standards.

3. Dimension・Marking・Circuit diagram

Date code are indicated in the product.

General dimension tolerance : ± 0.2

( )dimensions are reference dimensions.

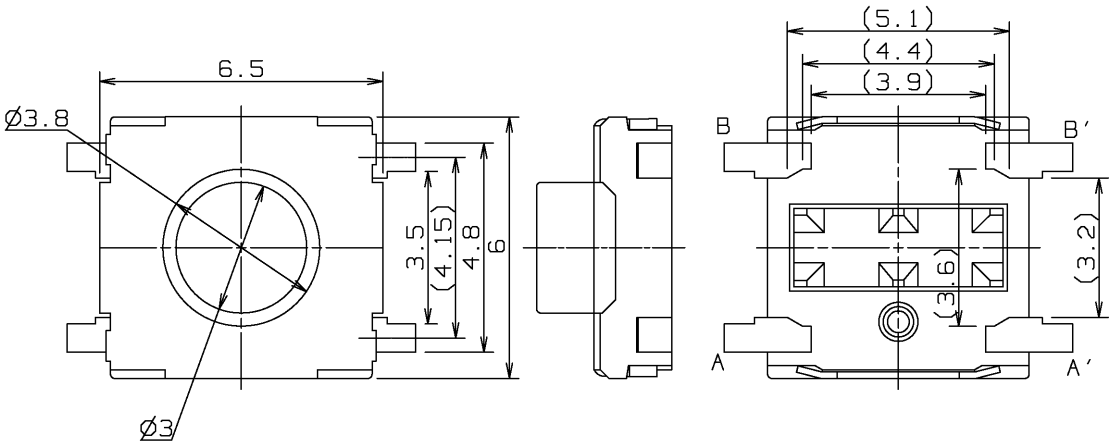


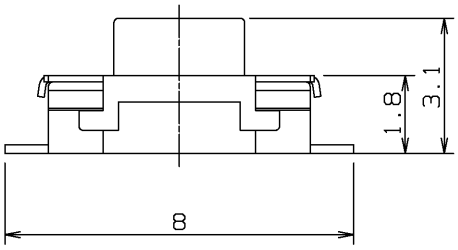


Knob color : WHITE

Piece weight : about 0.14g

Solder thickness : t=0.15±0.03

Note: Knob colour may be different depending on the location of the manufacturing process.

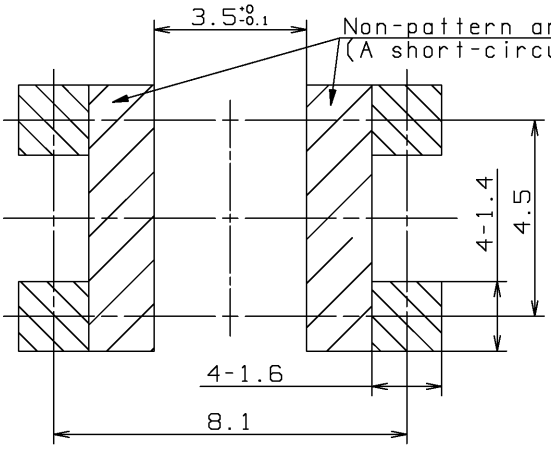


Land Pattern Plan

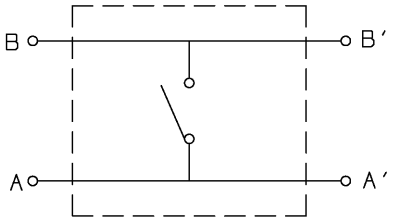


Circuit Diagram

4. General specification

4.1 Switch rating　DC 15 V 20 mA(max.)　DC 2V 10 μA(min.)

4.2 Operation temperature range　-40 ℃ ～ +85 ℃

4.3 Preservative temperature range　Single condition : -40～+85 ℃
Taping condition : -20～+60 ℃

4.4 Standard conditions

Unless otherwise specified, the test and measurements shall be carried out as follows.

Ambient temperature :5～35 ℃
Relative humidity :45～85 %
Air pressure :86～106 kPa

However, if doubt arises on the decision based on the measured values under the above-mentioned conditions, the following conditions shall be employed.

Ambient temperature :20± 2℃
Relative humidity :65±5 %
Air pressure :86～106 kPa

5. Performance

5.1 Electrical characteristics

| No. | ITEM | TEST CONDITION | PERFORMANCE |
|---|---|---|---|
| 5.1.1 | Contact resistance | Push force : {Operation force} × 2<br>Measurement tool : Contact resistance meter (Capable of 10 μA ～ 10 mA) | 100 mΩ max. |
| 5.1.2 | Insulation resistance | DC 100 V (Between terminals) | 100 MΩ min. |
| 5.1.3 | Withstand voltage | AC 250 V for 1 minute. (Between terminals) | No insulation destruction |
| 5.1.4 | Bouncing | Operation speed : 3～4 times/s<br> 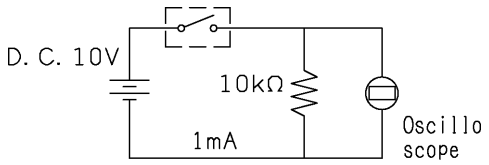 <br><br>Switch Bouncing Test Circuit | ON<br>10 ms max.<br>OFF<br>10 ms max. |

5.2 Mechanical characteristics

| No. | ITEM | TEST CONDITION | PERFORMANCE |
|---|---|---|---|
| 5.2.1 | Operation force | 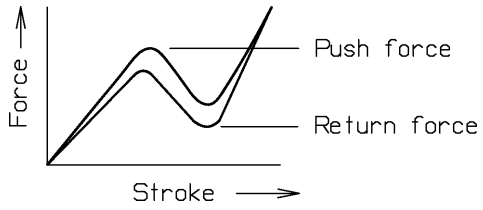 | Push force<br>$2.6^{+0.60}_{-0.60}$ N<br>Return force<br>0.5 N min. |
| 5.2.2 | Travel to closure | 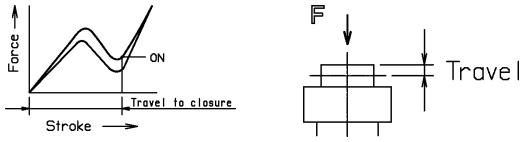 | $0.25^{+0.10}_{-0.10}$ mm |
| 5.2.3 | Push strength | 50 N for 60 sec. 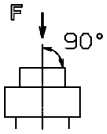 | No damage (Electrical and mechanical) |
| 5.2.4 | Vibration test | 1) Amplitude : 1.5 mm<br>2) Sweep rate : 10-55-10Hz for 1 minute<br>3) Sweep method : Logarithmic frequency sweep rate<br>4) Vibration direction : X,Y,Z(3 directions)<br>5) Time : Each direction 2 hours (Total 6 hours) | No.5.1 and 5.2.1 to 5.2.2 shall be satisfied. |
| 5.2.5 | Soldering heat test | Mount the switch on P.W.B by adhesive.<br>1) Reflow process 2 times. (Refer to section 6.1)<br>2) Standard conditions after test : 1 hours | No.5.1 and No.5.2.1 to 5.2.2 shall be satisfied. |
| 5.2.6 | Solderbility | After spreading flux, the terminal is immersed in solder with following condition.<br>Solder ber : M705/Sn-3.0Ag-0.5Cu (Senju Metal Indusry Co.,Ltd.)<br>Flux : CF-110VH-2A (tamura kaken)<br>Soldering temperture : 260±5℃<br>Soldering time : 2±0.5 sec. | 95% or more of surface area(Excluding ruptured surface)where is immersed in solder shall be covered by new solder. |

5.3 Climatic characteristics

| No. | ITEM | TEST CONDITION | PERFORMANCE |
|---|---|---|---|
| 5.3.1 | Cold test | 1) Temperature : -40±2 ℃<br>2) Duration of test : 500 h<br>3) Take off a drop water.<br>4) Standard conditions after test : 1 h | Contact resistance 200 mΩ max.<br>No.5.1.2 to 5.1.4 and No.5.2.1 to 5.2.2 shall be satisfied. |
| 5.3.2 | Heat test | 1) Temperature : 85±2 ℃<br>2) Duration of test : 500 h<br>3) Standard conditions after test : 1 h | Contact resistance 200 mΩ max.<br>No.5.1.2 to 5.1.4 and No.5.2.1 to 5.2.2 shall be satisfied. |
| 5.3.3 | Heat shock test | 1) Test cycles : 20 cycles<br>2) Standard conditions after test : 1 h<br> 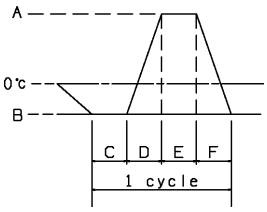 <br><br>A:+85±2 ℃<br>B:-40±2 ℃<br>C:1 hour<br>D:5 minutes max.<br>E:1 hour<br>F:5 minutes max. | Contact resistance 200 mΩ max.<br>No.5.1.2 to 5.1.4 and No.5.2.1 to 5.2.2 shall be satisfied. |
| 5.3.4 | Humidity test | 1) Temperature : 60±2 ℃<br>2) Relative humidity : 90～95 %<br>3) Duration of test : 500 h<br>4) Take off a drop water.<br>5) Standard conditions after test : 1 h | Contact resistance 200 mΩ max.<br>No.5.1.2 to 5.1.4 and No.5.2.1 to 5.2.2 shall be satisfied. |
| 5.3.5 | Endurance (Switching action) | 1) DC 15 V 20 mA Resistance load<br>2) Operation speed : 2～3 times/s<br>3) Push force : Maximum value of operation force<br>4) Operation number : 200,000 times | Contact resistance 20 Ω max.<br>Bouncing : 10 ms max.<br>Variation rate of operation force shall be within ±30 % to the value before testing<br>No.5.1.2 and 5.2.2 shall be satisfied. |
| 5.3.6 | Withstand $H_2S$ | 1) Density : 3±1 ppm<br>2) Temperature : 40±2 ℃<br>3) Relative humidity : 80～85 %<br>4) Duration of test : 24 h<br>5) Standard conditions after test : 1 h | Contact resistance 200 mΩ max.<br>No.5.1.2 to 5.1.4 and No.5.2.1 to 5.2.2 shall be satisfied. |

6. Prohibitions and precaution for handling

6.1 Reflow soldering condition

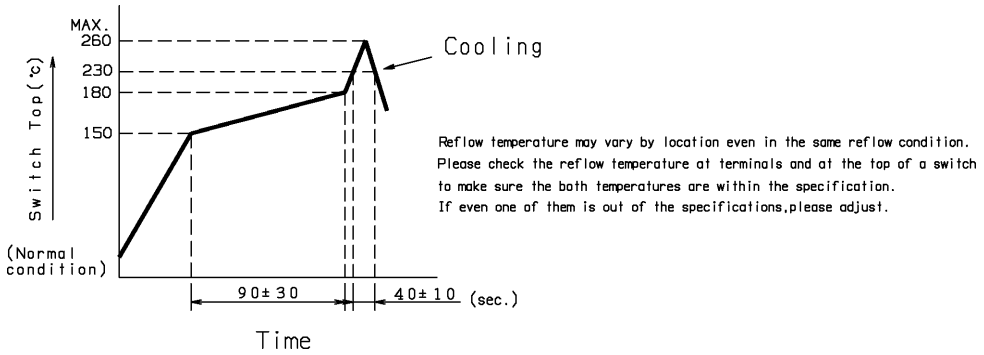


1) Two times max. with directing the switch mounting side of P.W.B up.
2) Re-soldering by soldering iron shall be allowed under 350℃ max. 3 sec. max. 1 time only and the tip of iron must not touch to terminals.
   Soldering iron for re-soldering have to be 60W max.

6.2 Design instructions

1) Please refer to the land pattern plan Panasonic recommends on the 2nd page.
2) Design key top as fig-1. Design inclination of key top 4 deg. max. as fig-2.
   Tolerance between switch and key top is within 0.3mm.
   (Recommended operation condition)

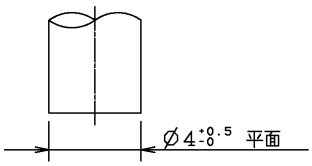


fig-1

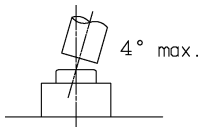


fig-2

6.3 Notes

1) Please be cautions not to give excessive static load or shock to switches.
2) Please be careful not to pile up P.W.B. after switches were soldered.
3) Preservation under high temperature and high humidity or corrosive gas should be avoided especially. When you need to preserve for a long period, do not open the carton.
4) Cleaning
   ・If flux or solder is scattered on the surface of P.W.B when soldering, characteristics of this product may be damaged.
   ・Cleaning after soldering is not allowed.When cleaning is required this switch should be soldered after the cleaning.
5) Avoid the use of the switch under pushed ON condition is continued for a long time.
6) There is a possibility the flux from solder paste infiltrates into the body if plenty of solder paste was applied by switch on the P.W.B.
   So we recommend to use our proposed land design in order to prevent above problem.
   Also please avoid putting additional land by the switch on the P.W.B.

7. Packing specification

Carrier tape

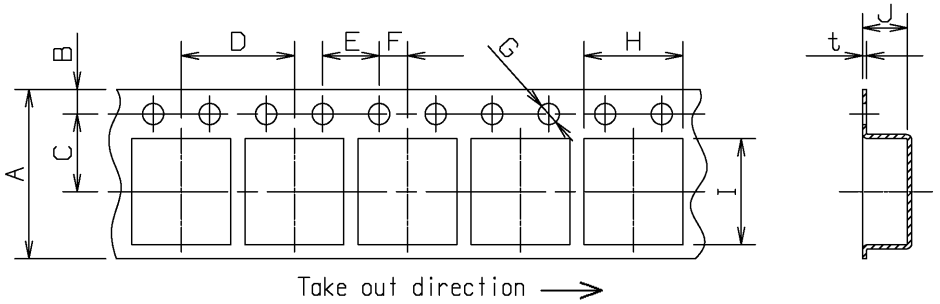


Unit:mm

| A | B | C | D | E | F | G | H | I | J | t |
|---|---|---|---|---|---|---|---|---|---|---|
| ±0.3 | ±0.1 | ±0.1 | ±0.1 | ±0.1 | ±0.1 | +0.1 -0 | ±0.2 | ±0.2 | ±0.2 | ±0.05 |
| 12 | 1.75 | 5.5 | 8 | 4 | 2 | 1.5 | 6.7 | 7.4 | 3.2 | 0.3 |

Taping condition : Lack of products in the middle of taping should be one MAX, but total quantity specified in the specifications should be secured.

Peeling off strength of top tape : It should be within 0.2N to 1.0N at 165 degree in peeling off angle.

Joint of carrier tape : One joint per one reel may exist.

Reel (2000pcs./reel)

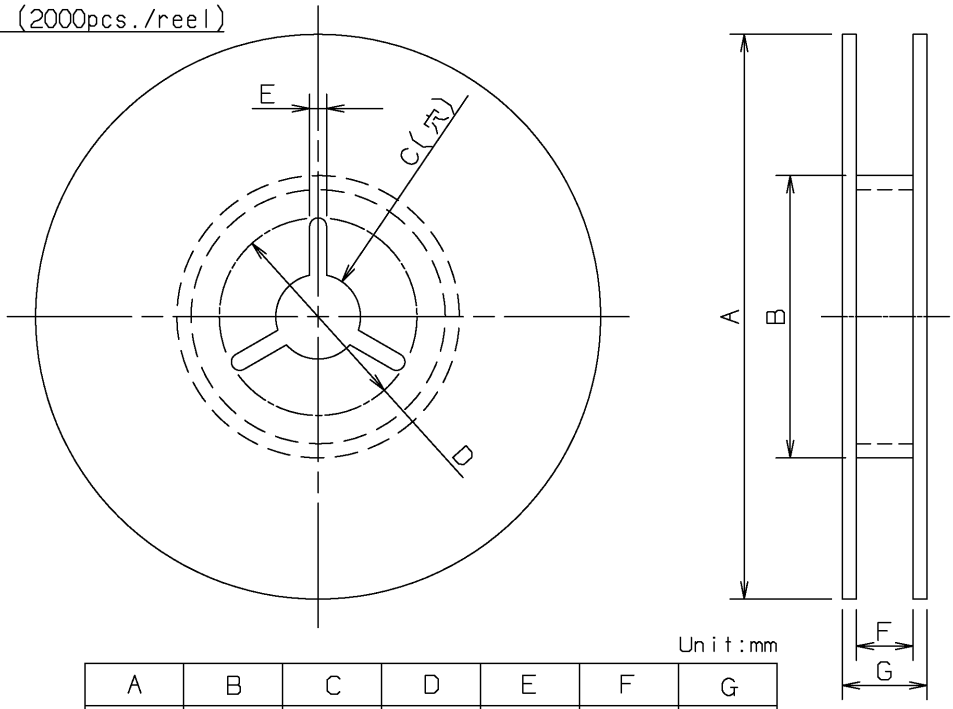


Unit:mm

| A | B | C | D | E | F | G |
|---|---|---|---|---|---|---|
| ±2 | ±1 | ±0.5 | ±1 | ±0.5 | ±1 | ±1 |
| Ø380 | Ø80 | Ø13 | Ø21 | 2 | 13.5 | 17.5 |

SECTIONAL DRAWING

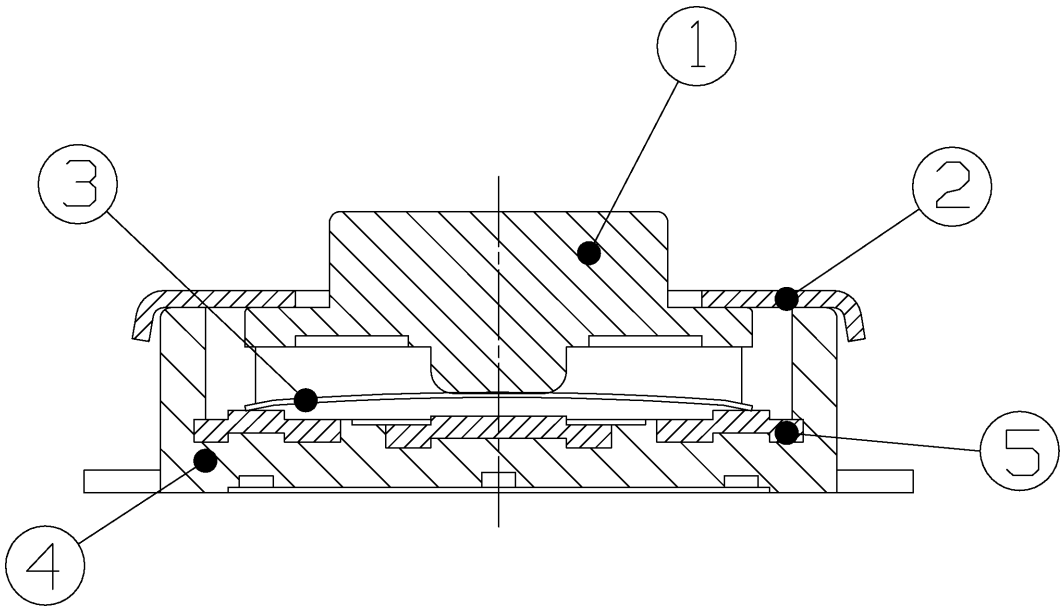


PART LIST

| NO. | PARTS NAME | MATERIAL | OTHERS |
|---|---|---|---|
| 1 | Push plate | PPA | |
| 2 | Cover | Stainless Steel Sheet | |
| 3 | Movable contactor | Cold Rolled Stainless Steel Strip for Springs | One side silver plating |
| 4 | Mounting base | PPA | |
| 5 | Immovable contactor | Brass Plate | Silver plating |
| | | | |

<Prohibitions and precaution for handling>

【Prohibited items on fire and smoking】

・Absolutely avoid use of a product beyond its rated range because doing so may cause a fire. If misuse or abnormal use may result under conditions in which the product is used out of its rated range,take proper measures such as current interruption using a protective circuit.

・The grade of nonflammability for resin used in product is "94HB," which is based on UL94 Standards (flammability test for plastic materials). Prohibit use in a location where a spreading fire may be generated or prepare against a spreading fire.

【For use in equipment for which safety is requested】

・Although care is taken to ensure product quality,inferior characteristics,short circuits, and open circuits are some problems that might be generated, To design an equipment which places maximum emphasis on safety,review the effect of any single fault of a product in advance and perform virtually fail-safe design to ensure maximum safety by:

・Preparing a protective circuit or a protective device to improve system safety,and equipment.

・Preparing a redundant circuit to improve system safety so that the single fault of a product does not cause a dangerous situation.

【Attentions required for storage condition】

・When this product is to be stored in the following circumstances and conditions,it may affect on the performance deteriorations and solderability etc.,avoid storing in the following conditions.

(1)A place where the temperature is -10℃ max.,+40℃ min. and the humidity is 85% min.

(2)In the corrosive gas atmosphere.

(3)Long-term storage for 6 months min.

(4)A place where the product is exposed to direct sunlight.

・Store in packed condition so that the load stress is not applied.

・Please use this product as soon as possible,our recommendation is within 3 months and the limitation is 6 months.

・If any remainder left after packing is opened,store it with proper moistureproofing and gasproofing,etc.,