KEMET Part Number: EDH108M050A9TAA

EDH, Aluminum Electrolytic, 105C, 1,000 uF, 20%, 50 VDC, -40/+105C

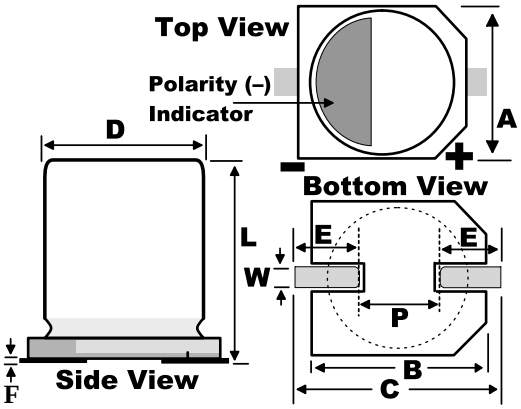

General Information	
Supplier:	KEMET
Series:	EDH
Dielectric:	Aluminum Electrolytic
Style:	SMD Can
Description:	Surface Mount, Aluminum Electrolytic
RoHS:	Yes
Lead:	V-Chip

Dimensions	
D	16mm +/-0.5mm
L	16.5mm +/-1mm
W	2mm +/-0.2mm
F	0.3mm MAX
A	16.3mm +/-0.2mm
B	16.3mm +/-0.2mm
C	18.7mm MAX
E	5.8mm +/-0.2mm
P	6mm +/-0.2mm

Specifications	
Capacitance:	1,000 uF
Capacitance Tolerance:	20%
Voltage DC:	50 VDC, 63 VDC (Surge)
Temperature Range:	-40/+105C
Rated Temperature:	105C
Life:	2000 Hrs
Dissipation Factor:	18.00% 120Hz 20C
Ripple Current:	800 mAmps (120Hz 105C)
Leakage Current:	500 uA (2min 20C)
Impedance Ratio at -25C:	2
Impedance Ratio at -40C:	3
High Temperature Solder:	Yes

Packaging Specifications	
Packaging:	T&R
Packaging Quantity:	125

Statements of suitability for certain applications are based on our knowledge of typical operating conditions for such applications, but are not intended to constitute - and we specifically disclaim - any warranty concerning suitability for a specific customer application or use. This Information is intended for use only by customers who have the requisite experience and capability to determine the correct products for their application. Any technical advice inferred from this Information or otherwise provided by us with reference to the use of our products is given gratis, and we assume no obligation or liability for the advice given or results obtained.

© 2006 - 2019 KEMET