Note: This datasheet may be out of date.
Please download the latest datasheet of DLW32SH510XK2# from the official website of Murata Manufacturing Co., Ltd.
https://www.murata.com/en-us/products/productdetail?partno=DLW32SH510XK2%23

DLW32SH510XK2#

"#" indicates a package specification code.

For CAN/CAN-FD DCMR Class2 Compliance

In Production | RoHS | REACH | AEC-Q200

< List of part numbers with package codes >

DLW32SH510XK2L DLW32SH510XK2B

Appearance & Shape

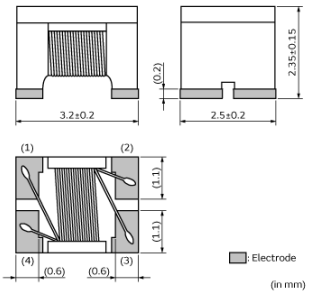

Features

1. Suitable for noise suppression at car area networks like CAN/CAN-FD.
   (IEC62228-3 DCMR Class2 Compliance)
2. High common mode impedance at high frequency range.
   So it is suitable for noise suppression through wide frequency range.
3. Wide operating temperature range (-40 to +125 degrees C)

Applications
Common mode noise suppression for car area networks like CAN/CAN-FD.

Applications

Automotive Usage	Powertrain/Safety

Packaging Information

Packaging	Specifications	Minimum Order Quantity
L	180mm Embossed Tape	1500
B	Bulk(Bag)	500

Attention
1.This datasheet is downloaded from the website of Murata Manufacturing Co., Ltd. Therefore, it's specifications are subject to change or our products in it may be discontinued without advance notice. Please check with our sales representatives or product engineers before ordering.
2.This datasheet has only typical specifications because there is no space for detailed specifications.
Therefore, please review our product specifications or consult the approval sheet for product specifications before ordering.

DLW32SH510XK2#

"#" indicates a package specification code.

Specifications

Shape	SMD
Size Code (in mm)	3225
Size Code (in inch)	1210
Length	3.2mm
Length Tolerance	±0.2mm
Width	2.5mm
Width Tolerance	±0.2mm
Thickness	2.35mm
Thickness Tolerance	±0.15mm
Rated Current	200mA
Derating of Rated Current	No
Rated Voltage	80Vdc
Withstanding Voltage	200Vdc
DC Resistance(max.)	0.7Ω
DC Resistance	0.7Ω max.
Insulation Resistance(min.)	10MΩ
Operating Temperature Range	-40℃ to 125℃

Mass(typ.)	0.072g
Number of Circuit	1
Common Mode Inductance	51μH-30%/+50% (at 0.1MHz)
Operating Temperature Range(Self-temperature rise is included)	No

Attention
1.This datasheet is downloaded from the website of Murata Manufacturing Co., Ltd. Therefore, it's specifications are subject to change or our products in it may be discontinued without advance notice. Please check with our sales representatives or product engineers before ordering.
2.This datasheet has only typical specifications because there is no space for detailed specifications.
Therefore, please review our product specifications or consult the approval sheet for product specifications before ordering.

DLW32SH510XK2#

"#" indicates a package specification code.

Product Data

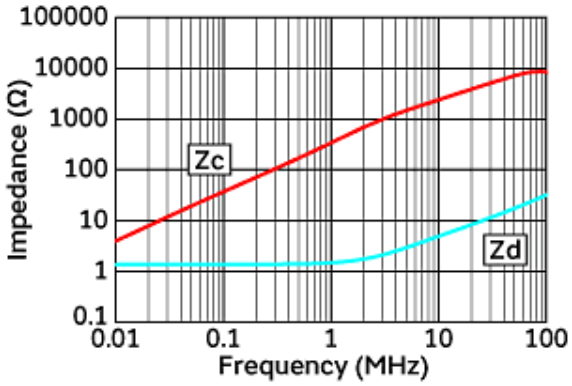

Impedance-Frequency Characteristics

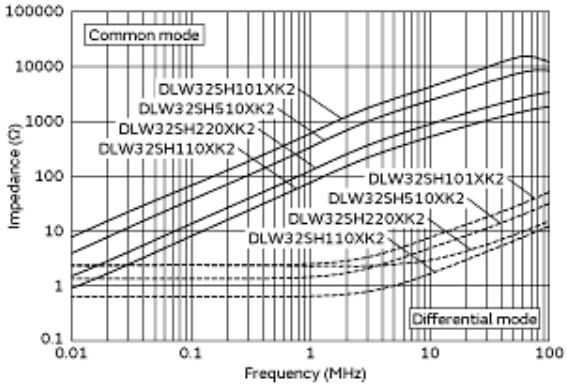

Impedance-Frequency Characteristics
(Main Items)

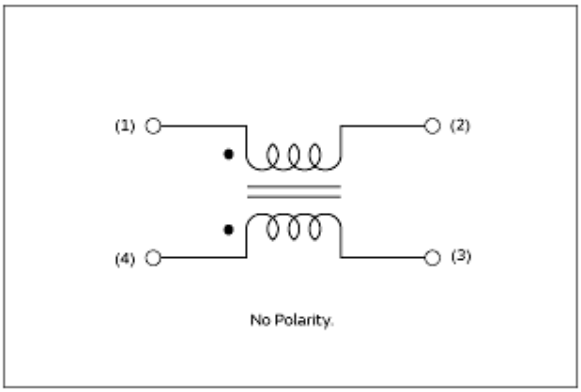

Equivalent Circuit

Attention
1.This datasheet is downloaded from the website of Murata Manufacturing Co., Ltd. Therefore, it's specifications are subject to change or our products in it may be discontinued without advance notice. Please check with our sales representatives or product engineers before ordering.
2.This datasheet has only typical specifications because there is no space for detailed specifications.
Therefore, please review our product specifications or consult the approval sheet for product specifications before ordering.