C901U222MZVDBA7317

Obsolete

C900AC SFTY X1-440 Y2-300, Ceramic, 2200 pF, 20%, 440 VAC (X1), 300 VAC (Y2), Y5V, 10mm

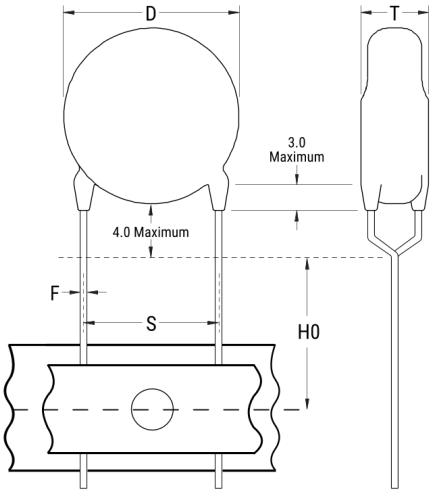

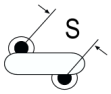

The measurement position of Lead Spacing (S) and Width (V) is critical in straight lead capacitors.

Click here for the 3D model.

Dimensions	
D	7mm MAX
T	5mm MAX
S	10mm +/-1mm
F	0.55mm +/-0.1mm

Packaging Specifications	
Packaging	Ammo
Packaging Quantity	1000

General Information	
Series	C900AC SFTY X1-440 Y2-300
Style	Radial Disc
RoHS	Yes
Termination	Tin
Lead	V-Crimp
Failure Rate	N/A
Qualifications	VDE, ENEC, UL, cUL
AEC-Q200	No

Specifications	
Capacitance	2200 pF
Capacitance Tolerance	20%
Voltage AC	440 VAC (X1), 300 VAC (Y2)
Temperature Range	-40/+125°C
Temperature Coefficient	Y5V
Dissipation Factor	5%
Insulation Resistance	10 GOhms
Safety Class	X1/Y2

Statements of suitability for certain applications are based on our knowledge of typical operating conditions for such applications, but are not intended to constitute - and we specifically disclaim - any warranty concerning suitability for a specific customer application or use. This Information is intended for use only by customers who have the requisite experience and capability to determine the correct products for their application. Any technical advice inferred from this Information or otherwise provided by us with reference to the use of our products is given gratis, and we assume no obligation or liability for the advice given or results obtained.

© 2006 - 2024 KEMET