KEMET Part Number: C0805C225M4RACAUTO

SMD Auto X7R, Ceramic, 2.2 uF, 20%, 16 VDC, X7R, SMD, MLCC, Temperature Stable, Automotive Grade, 0805

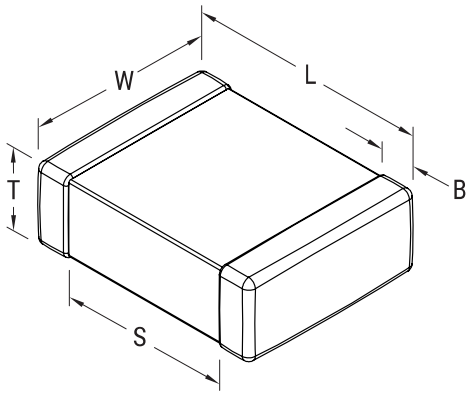

General Information	
Series:	SMD Auto X7R
Style:	SMD Chip
Description:	SMD, MLCC, Temperature Stable, Automotive Grade
Features:	Temperature Stable, Automotive Grade
RoHS:	Yes
Termination:	Tin
Marking:	No
Qualifications:	AEC-Q200
AEC-Q200:	Yes
Shelf Life:	78 Weeks
MSL:	1

Dimensions	
Chip Size	0805
L	2mm +/-0.2mm
W	1.25mm +/-0.2mm
T	1.25mm +/-0.15mm
S	0.75mm MIN
B	0.5mm +/-0.25mm

Packaging Specifications	
Packaging:	T&R, 180mm, Plastic Tape
Packaging Quantity:	2500

Specifications	
Capacitance:	2.2 uF
Measurement Condition:	1 kHz 1.0Vrms
Capacitance Tolerance:	20%
Voltage DC:	16 VDC
Dielectric Withstanding Voltage:	40 VDC
Temperature Range:	-55/+125°C
Temperature Coefficient:	X7R
Capacitance Change with Reference to +25°C and 0 VDC Applied (TCC):	15%, 1kHz 1.0Vrms
Dissipation Factor:	10% 1 kHz 1.0Vrms
Aging Rate:	3% Loss/Decade Hour: Referee Time is 48 Hours
Insulation Resistance:	45 MOhms

Statements of suitability for certain applications are based on our knowledge of typical operating conditions for such applications, but are not intended to constitute - and we specifically disclaim - any warranty concerning suitability for a specific customer application or use. This Information is intended for use only by customers who have the requisite experience and capability to determine the correct products for their application. Any technical advice inferred from this Information or otherwise provided by us with reference to the use of our products is given gratis, and we assume no obligation or liability for the advice given or results obtained.

© 2006 - 2020 KEMET