Smart Lowside Power Switch

Features

- Logic Level Input
- Input Protection (ESD)
- Thermal shutdown with latch
- Overload protection
- Short circuit protection
- Overvoltage protection
- Current limitation
- Maximum current adjustable with external resistor
- Current sense
- Status feedback with external input resistor
- Analog driving possible

Product Summary

Drain source voltage	V_{DS}	60	V
On-state resistance	$R_{DS(on)}$	18	mΩ
Current limit	$I_{D(lim)}$	9.5	A
Nominal load current	$I_{D(ISO)}$	19	A
Clamping energy	E_{AS}	6000	mJ

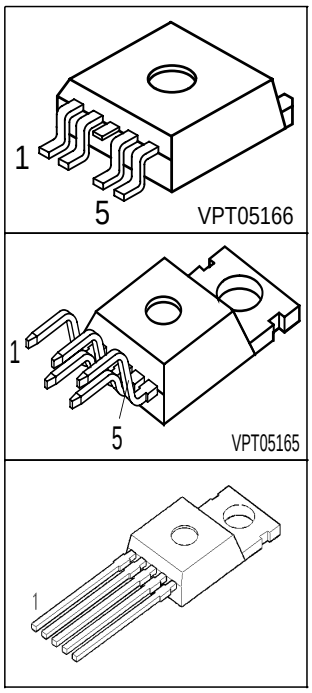

Application

- All kinds of resistive, inductive and capacitive loads in switching or linear applications
- µC compatible power switch for 12 V and 24 V DC applications
- Replaces electromechanical relays and discrete circuits

General Description

N channel vertical power FET in Smart SIPMOS® chip on chip technology. Fully protected by embedded protected functions.

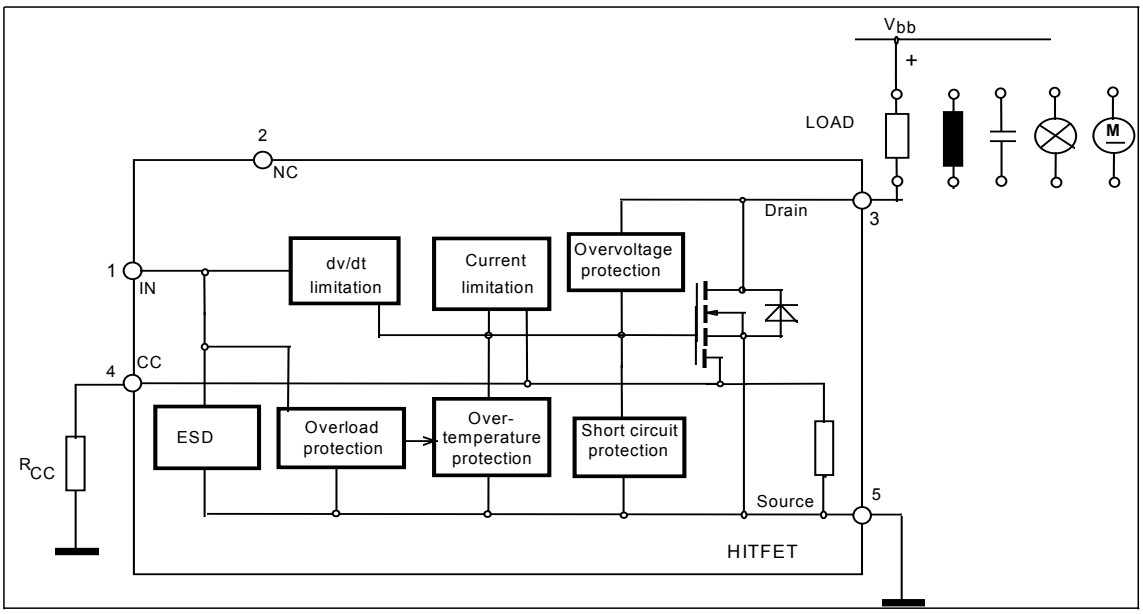

http://store.iiic.cc/

Maximum Ratings at Tj = 25 °C unless otherwise specified

Parameter	Symbol	Value	Unit
Drain source voltage	V_{DS}	60	V
Drain source voltage for short circuit protection R_{CC} = 0 Ω without R_{CC}	$V_{DS(SC)}$	 15 50	
Continuous input current [1)] -0.2V ≤ V_{IN} ≤ 10V V_{IN} < -0.2V or V_{IN} > 10V	I_{IN}	 no limit $\lvert I_{IN} \rvert \leq 2$	mA
Operating temperature	T_j	- 40 ... +150	°C
Storage temperature	T_{stg}	- 55 ... +150	
Power dissipation T_C = 25 °C	P_{tot}	240	W
Unclamped single pulse inductive energy $I_{D(ISO)}$ = 19 A	E_{AS}	6000	mJ
Electro**s**tatic **d**ischarge voltage (Human Body Model) according to MIL STD 883D, method 3015.7 and EOS/ESD assn. standard S5.1 - 1993	V_{ESD}	3000	V
Load dump protection $V_{LoadDump}$[2)] = V_A + V_S V_{IN}=low or high; V_A=13.5 V t_d = 400 ms, R_I = 2 Ω, I_D=0,5*19A t_d = 400 ms, R_I = 2 Ω, I_D= 19A	V_{LD}	 110 92	
DIN humidity category, DIN 40 040		E	
IEC climatic category; DIN IEC 68-1		40/150/56	

Thermal resistance

junction - case:	R_{thJC}	0.7	K/W
junction - ambient:	R_{thJA}	75	
SMD version, device on PCB:[3)]	R_{thJA}	45	

[1] In case of thermal shutdown a minimum sensor holding current of 500 µA has to be guaranteed (see also page 3).

[2] $V_{Loaddump}$ is setup without the DUT connected to the generator per ISO 7637-1 and DIN 40839

[3] Device on 50mm*50mm*1.5mm epoxy PCB FR4 with 6cm^2 (one layer, 70µm thick) copper area for drain connection. PCB mounted vertical without blown air.

http://store.iiic.cc/

Electrical Characteristics

Parameter at T_j=25°C, unless otherwise specified	Symbol	Values			Unit
		min.	typ.	max.	
Characteristics					
Drain source clamp voltage T_j = - 40 ...+ 150°C, I_D = 10 mA	$V_{DS(AZ)}$	60	-	73	V
Off state drain current V_{DS} = 32 V, T_j = -40...+150 °C, V_{IN} = 0 V	I_{DSS}	-	-	25	µA
Input threshold voltage I_D = 3,9 mA	$V_{IN(th)}$	1.3	1.7	2.2	V
Input current - normal operation, I_D<$I_{D(lim)}$: V_{IN} = 10 V	$I_{IN(1)}$	-	-	100	µA
Input current - current limitation mode, I_D=$I_{D(lim)}$: V_{IN} = 10 V	$I_{IN(2)}$	-	400	1000	
Input current - after thermal shutdown, I_D=0 A: V_{IN} = 10 V	$I_{IN(3)}$	1500	3000	6000	
Input holding current after thermal shutdown [1)] T_j = 25 °C T_j = 150 °C	$I_{IN(H)}$	 500 300	 - -	 - -	
On-state resistance V_{IN} = 5 V, I_D = 19 A, T_j = 25 °C V_{IN} = 5 V, I_D = 19 A, T_j = 150 °C	$R_{DS(on)}$	 - -	 18 30	 22 44	mΩ
On-state resistance V_{IN} = 10 V, I_D = 19 A, T_j = 25 °C V_{IN} = 10 V, I_D = 19 A, T_j = 150 °C	$R_{DS(on)}$	 - -	 14 25	 18 36	
Nominal load current (ISO 10483) V_{IN} = 10 V, V_{DS} = 0.5 V, T_C = 85 °C	$I_{D(ISO)}$	19	-	-	A

[1] If the input current is limited by external components, low drain currents can flow and heat the device. Auto restart behaviour can occur.

http://store.iiic.cc/

Electrical Characteristics

Parameter at T_j=25°C, unless otherwise specified	Symbol	Values			Unit
		min.	typ.	max.	
Characteristics					
Initial peak short circuit current limit V_{IN} = 10 V, V_{DS} = 12 V	$I_{D(SCp)}$	-	175	-	A
Current limit [1)] V_{IN} = 10 V, V_{DS} = 12 V, t_m = 350 µs, T_j = -40...+150 °C, without R_{CC} V_{IN} = 10 V, V_{DS} = 12 V, t_m = 350 µs, T_j = -40...+150 °C, R_{CC} = 0 Ω	$I_{D(lim)}$	 9.5 150	 19 220	 40 270	
Dynamic Characteristics					
Turn-on time V_{IN} to 90% I_D: R_L = 1 Ω, V_{IN} = 0 to 10 V, V_{bb} = 12 V	t_{on}	-	40	100	µs
Turn-off time V_{IN} to 10% I_D: R_L = 1 Ω, V_{IN} = 10 to 0 V, V_{bb} = 12 V	t_{off}	-	70	170	
Slew rate on 70 to 50% V_{bb}: R_L = 1 Ω, V_{IN} = 0 to 10 V, V_{bb} = 12 V	$-dV_{DS}/dt_{on}$	-	1	3	V/µs
Slew rate off 50 to 70% V_{bb}: R_L = 1 Ω, V_{IN} = 10 to 0 V, V_{bb} = 12 V	dV_{DS}/dt_{off}	-	1	3	
Protection Functions					
Thermal overload trip temperature	T_{jt}	150	165	-	°C
Unclamped single pulse inductive energy I_D = 19 A, T_j = 25 °C, V_{bb} = 32 V I_D = 19 A, T_j = 150 °C, V_{bb} = 32 V	E_{AS}	 6000 1800	 - -	 - -	mJ
Inverse Diode					
Inverse diode forward voltage I_F = 5*19A, t_m = 300 µS, V_{IN} = 0 V	V_{SD}	-	1,1	-	V

[1]Device switched on into existing short circuit (see diagram Determination of $I_{D(lim)}$). If the device is in on condition and a short circuit occurs, these values might be exceeded for max. 50 µs.

http://store.iiic.cc/

Block Diagramm

Terms

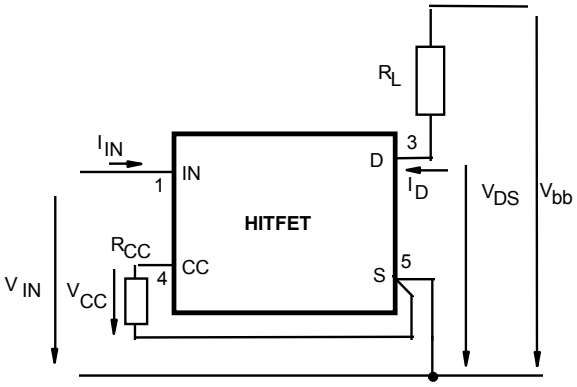

The ground lead impedance of R_{CC} should be as low as possible

Input circuit (ESD protection)

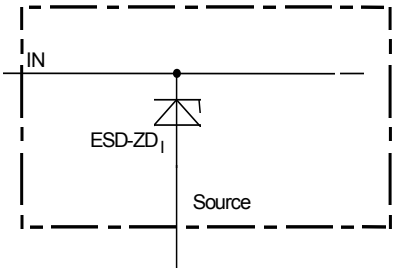

ESD zener diodes are not designed for DC current > 2 mA @ V_{IN}>10V.

Inductive and overvoltage output clamp

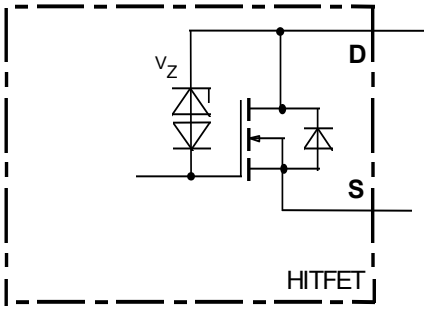

Short circuit behaviour

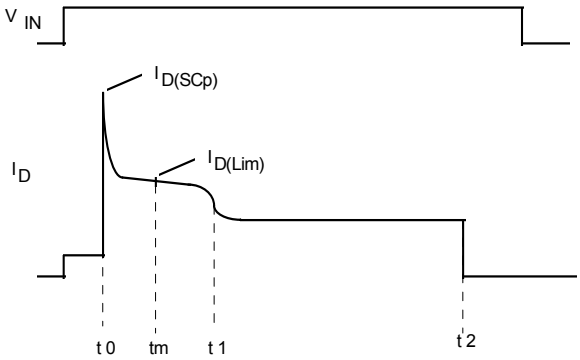

t_0: Turn on into a short circuit

t_m: Measurementpoint for $I_{D(lim)}$

t_1: Activation of the fast temperature sensor and regulation of the drain current to a level where the junction temperature remains constant.

t_2: Thermal shutdown caused by the second temperature sensor, achieved by an integrating measurement.

http://store.iiic.cc/

Maximum allowable power dissipation

$P_{tot} = f(T_c)$

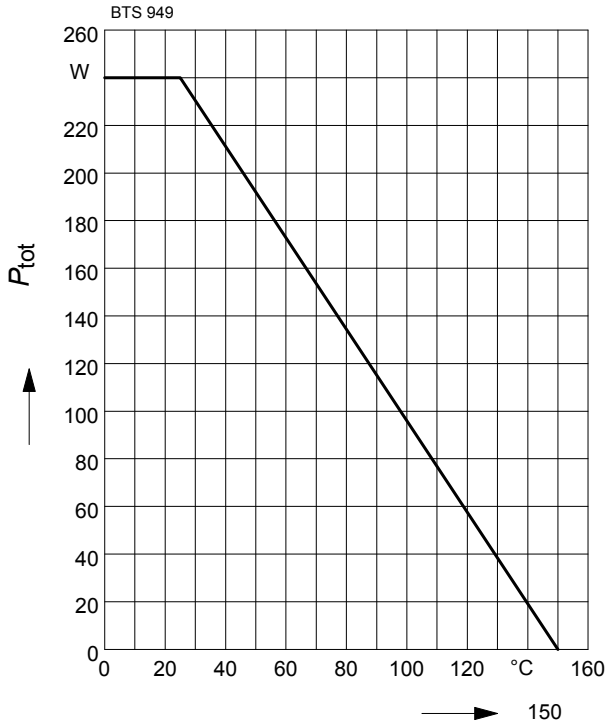

On-state resistance

$R_{ON} = f(T_j)$; I_D=19A; V_{IN}=10V

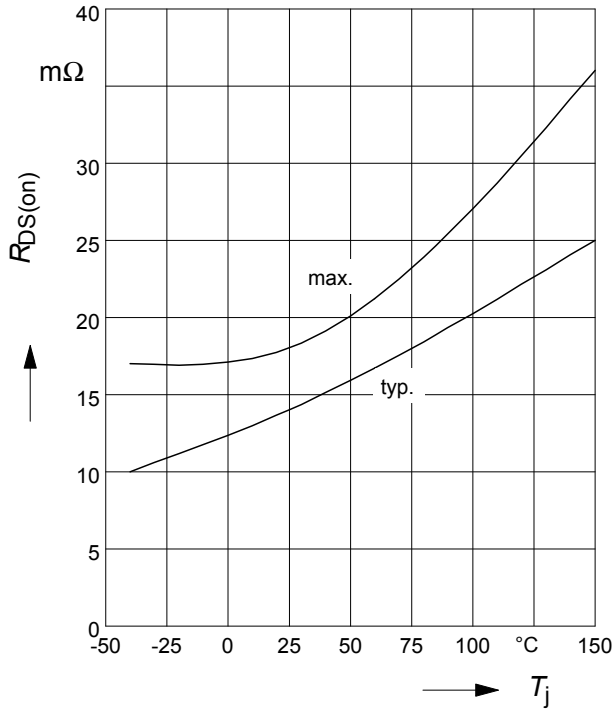

On-state resistance

$R_{ON} = f(T_j)$; I_D= 19A; V_{IN}=5V

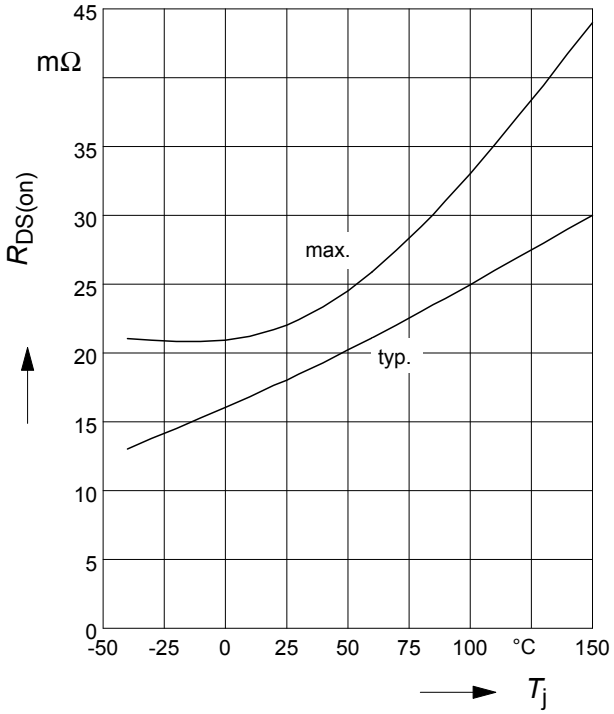

Typ. input threshold voltage

$V_{IN(th)} = f(T_j)$; I_D=3,9A; V_{DS}=12V

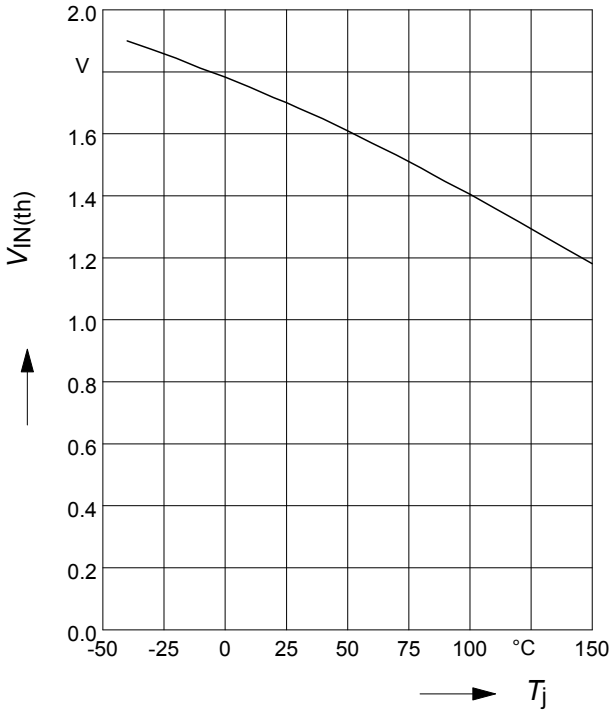

http://store.iiic.cc/

Typ. transfer characteristics

I_D = f(V_{IN}); V_{DS}=12V; T_j=25°C

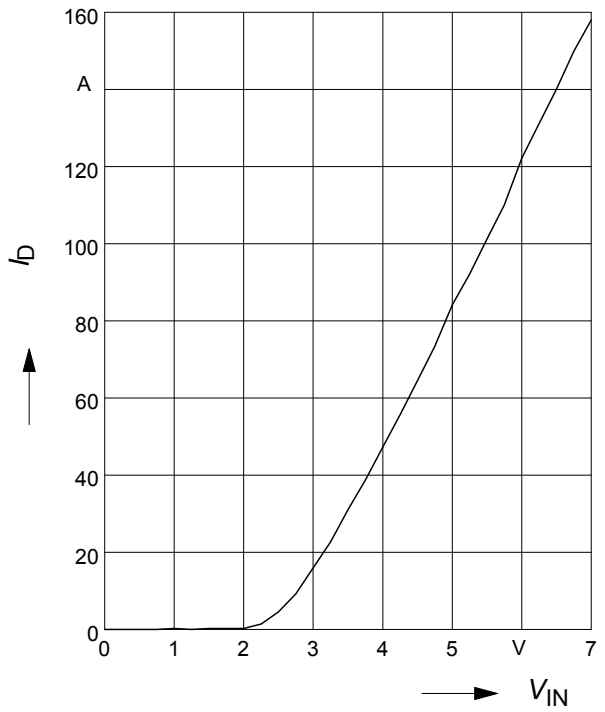

Typ. short circuit current

I_{Dlim} = f(Tj); R_{CC}=0Ω, V_{DS}=12V

Parameter: V_{IN}

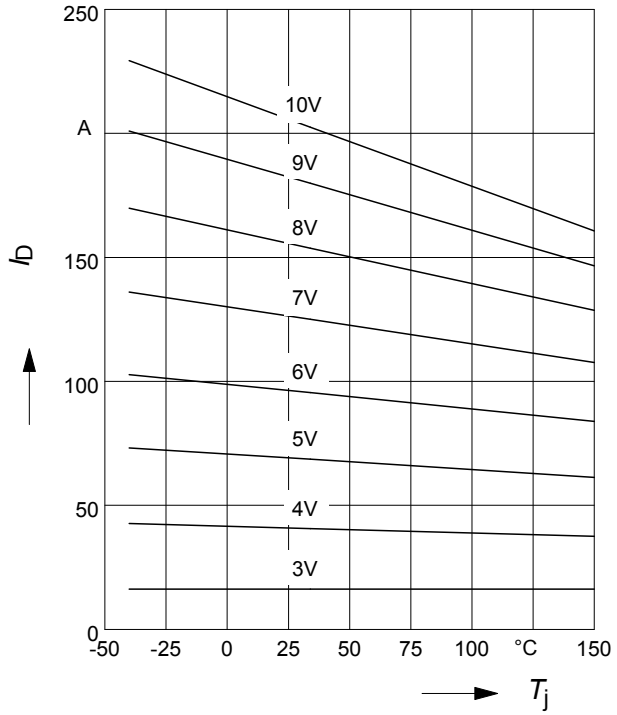

Typ. output characteristic

I_D = f(V_{DS}); T_j=25°C

Parameter: V_{IN}

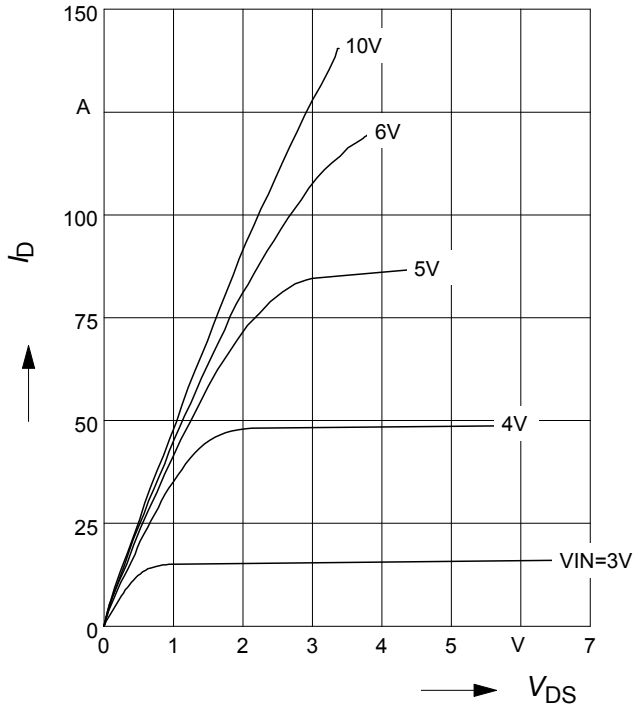

Safe Operating Area

$I_{D(SC)}$ = f(V_{DS}); T_j=25°C

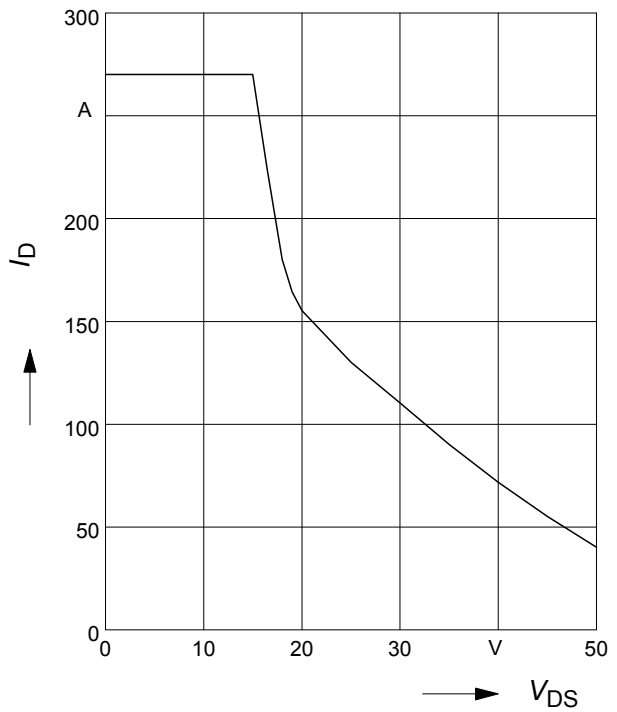

http://store.iiic.cc/

Typ. current limit versus R_{CC}

$I_{D(lim)} = f(R_{CC})$; T_j=25°C

Parameter: V_{IN}

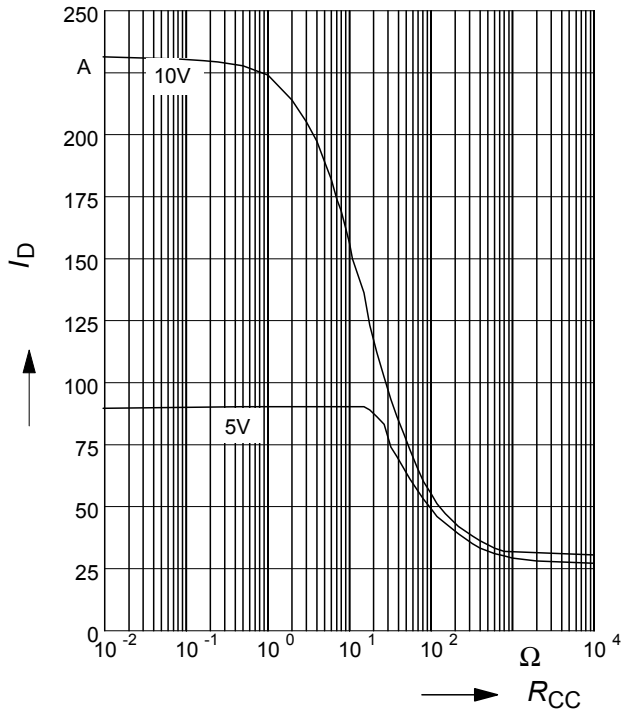

Typ. current sense characteristics

$V_{CC} = f(I_D)$; V_{IN}=10V

Parameter: R_{CC}, T_j

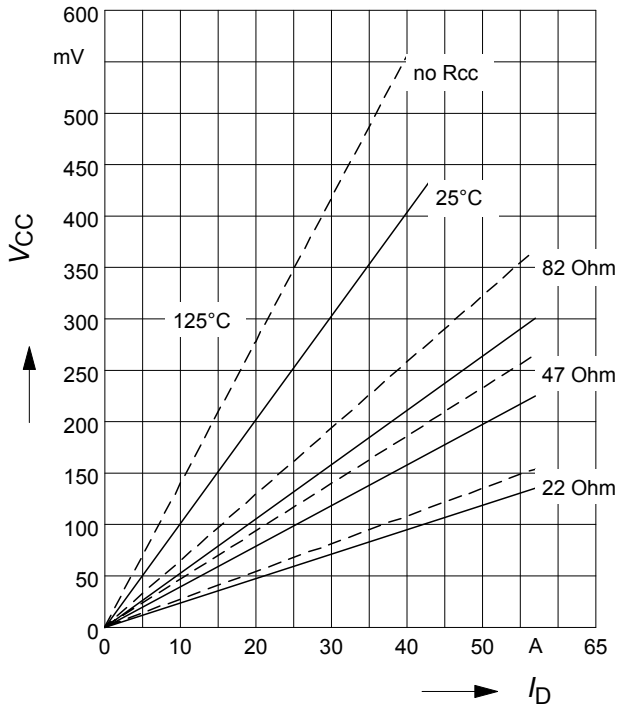

Transient thermal impedance

$Z_{thJC} = f(t_p)$

parameter : $D = t_p/T$

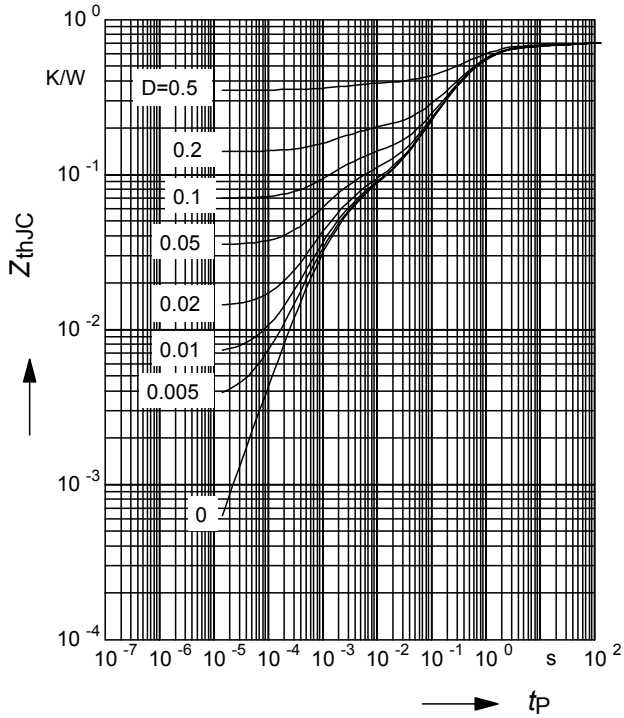

http://store.iiic.cc/

Application examples:

Current Sense Features and Status Signals

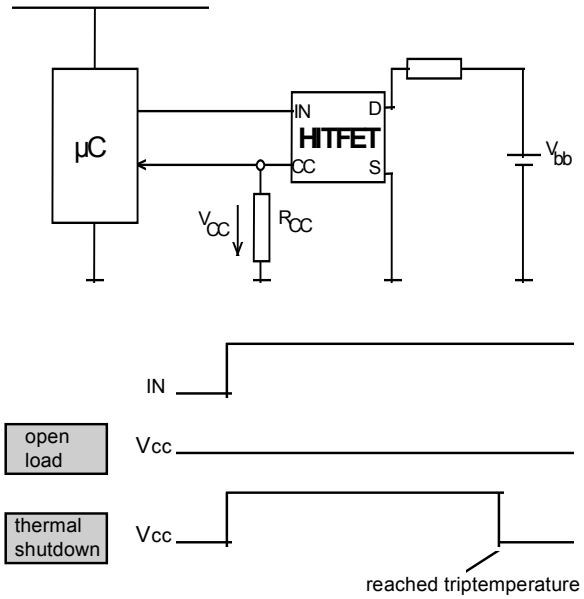

The accuray of Vcc is at each temperature about ±10 %

Status signal of thermal shutdown by monitoring input current

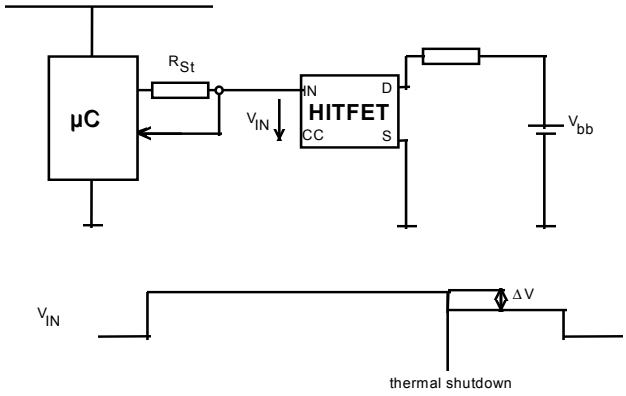

$\Delta V = R_{ST} * I_{IN(3)}$

http://store.iiic.cc/

Package	Ordering Code	Package	Ordering Code
P-TO220-5-62	Q67060-S6703-A4	P-TO220-5-3	Q67060-S6703-A2

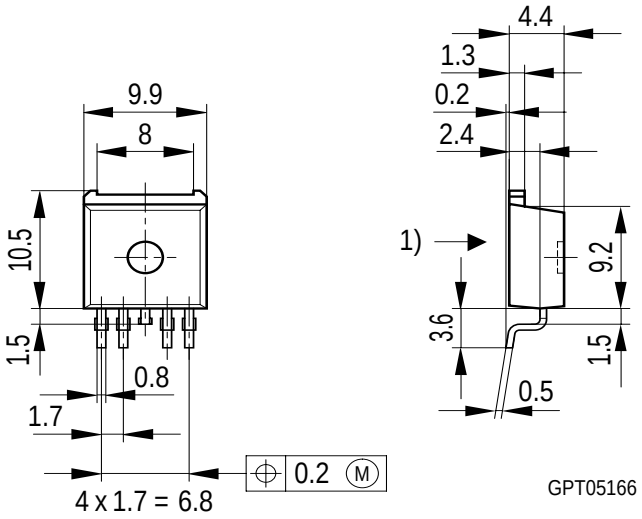

1) shear and punch direction no burrs this surface

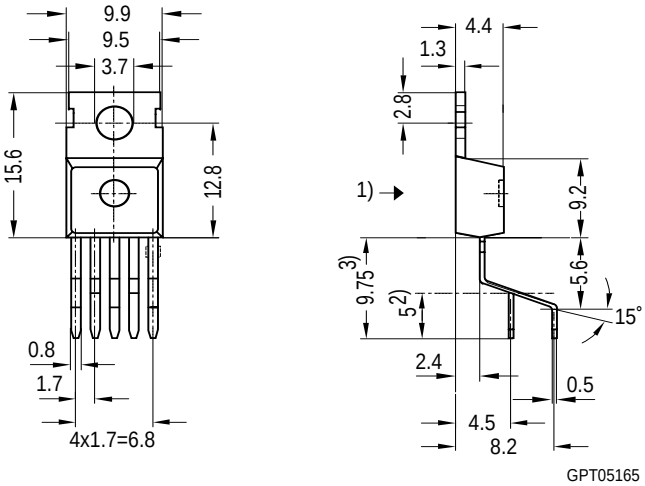

1) shear and punch direction no burrs this surface
2) min. length by tinning
3) max. 11 mm allowable by tinning

Package	Ordering Code
P-TO220-5-43	On request

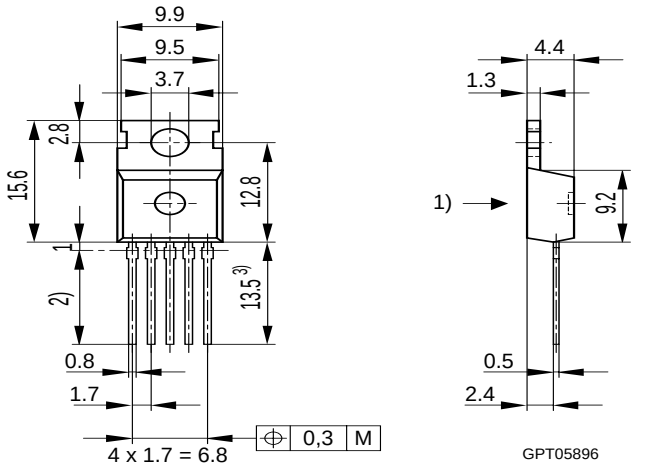

1) Punch direction, burr max. 0.04
2) Dip tinning
3) Max. 14.5 by dip tinning press burr
max. 0.05 radii not dimensioned max. 0.2

http://store.iiic.cc/

Published by
Infineon Technologies AG,
Bereichs Kommunikation
St.-Martin-Strasse 53,
D-81541 München
© Infineon Technologies AG 1999
All Rights Reserved.

Attention please!
The information herein is given to describe certain components and shall not be considered as warranted characteristics.

Terms of delivery and rights to technical change reserved.

We hereby disclaim any and all warranties, including but not limited to warranties of non-infringement, regarding circuits, descriptions and charts stated herein.

Infineon Technologies is an approved CECC manufacturer.

Information
For further information on technology, delivery terms and conditions and prices please contact your nearest Infineon Technologies Office in Germany or our Infineon Technologies Reprensatives worldwide (see address list).

Warnings
Due to technical requirements components may contain dangerous substances.
For information on the types in question please contact your nearest Infineon Technologies Office.

Infineon Technologies Components may only be used in life-support devices or systems with the express written approval of Infineon Technologies, if a failure of such components can reasonably be expected to cause the failure of that life-support device or system, or to affect the safety or effectiveness of that device or system Life support devices or systems are intended to be implanted in the human body, or to support and/or maintain and sustain and/or protect human life. If they fail, it is reasonable to assume that the health of the user or other persons may be endangered.

http://store.iiic.cc/