PART MARK DETAIL FOR TE CIRCULAR BACKSHELL

IF IN DOUBT ASK BACKSHELL ENGINEERING TEAM!!!

USED ON

DWG NO DM0113

THIS DRAWING IS A CONTROLLED DOCUMENT

ACCEPTABLE LOCATIONS:

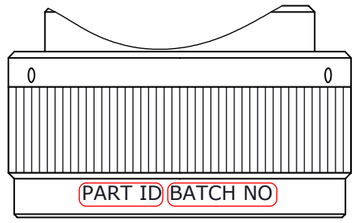

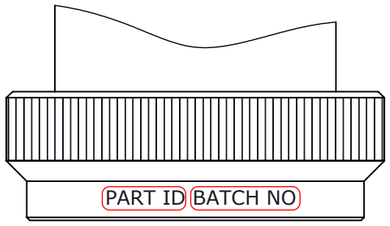

EXAMPLES JUST FOR REFERENCE
GENERAL RULE IS TO PLACE THE PART MARKING ON THE WIDEST, PLAIN DIAMETER OF THE COUPLING NUT.

STANDARD FONT PARAMETERS:
FONT TYPE: VERDANA
STANDARD TEXT HEIGHT - 1,8mm
USE 1,4mm ONLY IF NECESSARY
WIDTH / HEIGHT RATIO - 0,5
CHARACTER SPACING - 0,5

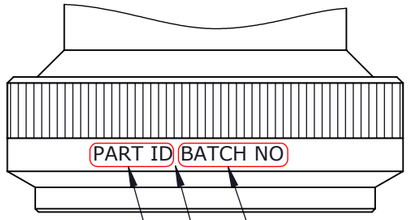

BATCH NUMBER; SHALL TAKE FORM - (P)xxxxxx
PREFIX OF 'P' OR 'T' TO BE INCLUDED OR OMITTED AS REQUIRED - DOCUMENTED ON PRODUCTION ORDER;
xxxxxx - BATCH NUMBER

LEAVE ONE CHARACTER SPACE

PART NUMBER - DESCRIPTIVE PART NUMBER, ***NOT TCPN !!***
THIS MAY BE DIFFERENT TO PART NUMBER ON THE WORKS ORDER !!
- SEE TEXT ON PART MARKING OPERATION

IN CASE OF STYLE T2 & T3 BACKSHELL
ONLY FIRST NUT MUST BE PART MARKED!

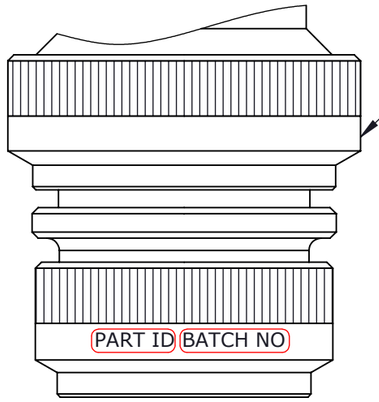

NOTE:

1. THIS IS THE GOVERNING DOCUMENT FOR STANDARD CIRCULAR BACKSHELL'S PART MARKING INFORMATION.
   FOR TXR, BND AND PNT BACKSHELLS - PLEASE REFER TO DM0079

2. CUSTOMER REQUIREMENTS ON THE DRAWING AND PART MARKING INFORMATION IN SAP ALWAYS TO BE CHECKED PRIOR TO THE PART MARKING OPERATION. (EX. CAGE CODES OR DATE CODES);
   IN ALL INSTANCES CUSTOMER DRAWINGS TAKES PRIORITY OVER PRODUCTION DRAWINGS (BILL OF MATERIALS) WHICH TAKES PRIORITY OVER THIS DOCUMENT.

3. IN CASE OF SUFFIX CVxxxx ON THE END OF THE PART NUMBER PLEASE REFER TO THE CVxxxx DOCUMENT FOR CUSTOMER SPECIFIC PART MARKING/BAGGING INFORMATION.

4. IN CASE OF THE INFORMATION DISCREPENCY PLEASE CONTACT BACKSHELL TEAM FOR VALIDATION.

REV	DESCRIPTION	DATE	DWN	APVD

DIMENSIONS: mm

TOLERANCES UNLESS OTHERWISE SPECIFIED:
0 PLC ±0,40
1 PLC ±0,20
2 PLC ±0,10
ANGLES ±1°
ALL FILLETS 0,4 MAX

ALL DIAMETERS ◎ ø0,10

SURFACE FINISH Ra1.6 MAX
REMOVE ALL BURRS AND SHARP EDGES TO 0,1 MAX

DWN K.KUTA-WINCZURA	19/07/2022	MATERIAL SEE NOTES	HEAT TREAT SEE NOTES
CHK R.STYLES	21/07/2022	TE Connectivity	
APVD R.MCSHERRY	19/07/2022		
NAME PART MARK DETAILS FOR CIRCULAR BACKSHELLS			
SCALE 2:1	SIZE A3	PART NO VARIOUS	SHEET 1 OF 1 / REV AA

THIS INFORMATION IS CONFIDENTIAL AND PROPRIETARY TO TYCO ELECTRONICS CORPORATION AND ITS WORLDWIDE SUBSIDIARIES AND AFFILIATES (TE). IT MAY NOT BE DISCLOSED TO ANYONE, OTHER THAN TE PERSONNEL, WITHOUT AUTHORIZATION FROM TE (www.TE.com).

3306-7 (3/13)