Agilent ATF-54143 Low Noise Enhancement Mode Pseudomorphic HEMT in a Surface Mount Plastic Package

Data Sheet

Description

Agilent Technologies's ATF-54143 is a high dynamic range, low noise, E-PHEMT housed in a 4-lead SC-70 (SOT-343) surface mount plastic package.

The combination of high gain, high linearity and low noise makes the ATF-54143 ideal for cellular/PCS base stations, MMDS, and other systems in the 450 MHz to 6 GHz frequency range.

Surface Mount Package SOT-343

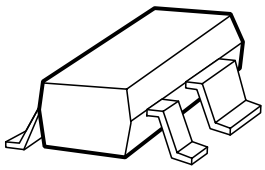

Pin Connections and Package Marking

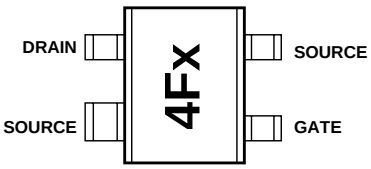

Note:
Top View. Package marking provides orientation and identification

"4F" = Device Code
"x" = Date code character identifies month of manufacture.

Features

- **High linearity performance**
- **Enhancement Mode Technology [1]**
- **Low noise figure**
- **Excellent uniformity in product specifications**
- **800 micron gate width**
- **Low cost surface mount small plastic package SOT-343 (4 lead SC-70)**
- **Tape-and-Reel packaging option available**

Specifications

2 GHz; 3 V, 60 mA (Typ.)

- **36.2 dBm output 3rd order intercept**
- **20.4 dBm output power at 1 dB gain compression**
- **0.5 dB noise figure**
- **16.6 dB associated gain**

Applications

- **Low noise amplifier for cellular/ PCS base stations**
- **LNA for WLAN, WLL/RLL and MMDS applications**
- **General purpose discrete E-PHEMT for other ultra low noise applications**

Note:

1. Enhancement mode technology requires positive Vgs, thereby eliminating the need for the negative gate voltage associated with conventional depletion mode devices.

Agilent Technologies

ATF-54143 Absolute Maximum Ratings [1]

Symbol	Parameter	Units	Absolute Maximum
V_{DS}	Drain - Source Voltage [2]	V	5
V_{GS}	Gate - Source Voltage [2]	V	-5 to 1
V_{GD}	Gate Drain Voltage [2]	V	5
I_{DS}	Drain Current [2]	mA	120
P_{diss}	Total Power Dissipation [3]	mW	725
$P_{in\ max.}$	RF Input Power	dBm	10 [5]
I_{GS}	Gate Source Current	mA	2 [5]
T_{CH}	Channel Temperature	°C	150
T_{STG}	Storage Temperature	°C	-65 to 150
θ_{jc}	Thermal Resistance [4]	°C/W	162

Notes:
1. Operation of this device in excess of any one of these parameters may cause permanent damage.
2. Assumes DC quiescent conditions.
3. Source lead temperature is 25°C. Derate 6.2 mW/°C for T_L > 33°C.
4. Thermal resistance measured using 150°C Liquid Crystal Measurement method.
5. The device can handle +10 dBm RF Input Power provided I_{GS} is limited to 2 mA. I_{GS} at P_{1dB} drive level is bias circuit dependent. See application section for additional information.

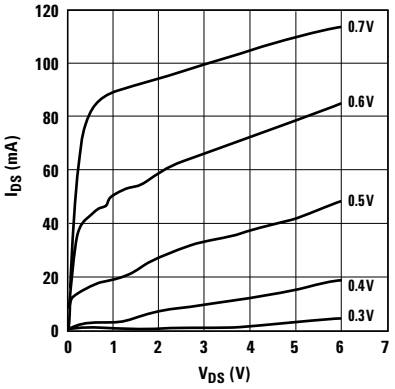

Figure 1. Typical I-V Curves. (V_{GS} = 0.1 V per step)

Product Consistency Distribution Charts [6, 7]

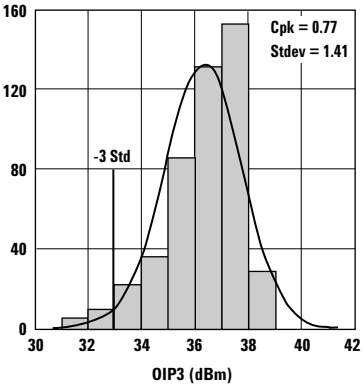

Figure 2. OIP3 @ 2 GHz, 3 V, 60 mA. LSL = 33.0, Nominal = 36.575

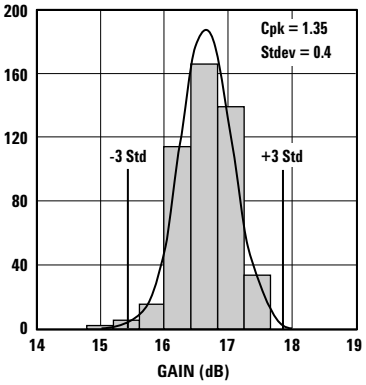

Figure 3. Gain @ 2 GHz, 3 V, 60 mA. USL = 18.5, LSL = 15, Nominal = 16.6

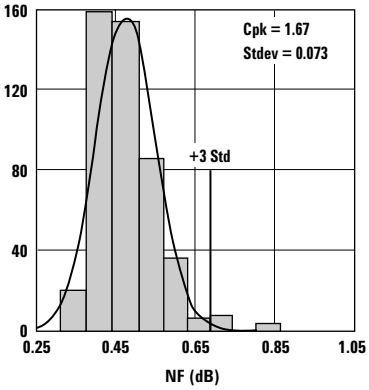

Figure 4. NF @ 2 GHz, 3 V, 60 mA. USL = 0.9, Nominal = 0.49

Notes:
6. Distribution data sample size is 450 samples taken from 9 different wafers. Future wafers allocated to this product may have nominal values anywhere between the upper and lower limits.
7. Measurements made on production test board. This circuit represents a trade-off between an optimal noise match and a realizeable match based on production test equipment. Circuit losses have been de-embedded from actual measurements.

ATF-54143 Electrical Specifications

T_A = 25°C, RF parameters measured in a test circuit for a typical device

Symbol	Parameter and Test Condition			Units	Min.	Typ.[2]	Max.
Vgs	Operational Gate Voltage		Vds = 3V, Ids = 60 mA	V	0.4	0.59	0.75
Vth	Threshold Voltage		Vds = 3V, Ids = 4 mA	V	0.18	0.38	0.52
Idss	Saturated Drain Current		Vds = 3V, Vgs = 0V	µA	—	1	5
Gm	Transconductance		Vds = 3V, gm = ΔIdss/ΔVgs; ΔVgs = 0.75 - 0.7 = 0.05V	mmho	230	410	560
Igss	Gate Leakage Current		Vgd = Vgs = -3V	µA	—	—	200
NF	Noise Figure[1]	f = 2 GHz	Vds = 3V, Ids = 60 mA	dB	—	0.5	0.9
		f = 900 MHz	Vds = 3V, Ids = 60 mA	dB	—	0.3	—
Ga	Associated Gain[1]	f = 2 GHz	Vds = 3V, Ids = 60 mA	dB	15	16.6	18.5
		f = 900 MHz	Vds = 3V, Ids = 60 mA	dB	—	23.4	—
OIP3	Output 3rd Order Intercept Point[1]	f = 2 GHz	Vds = 3V, Ids = 60 mA	dBm	33	36.2	—
		f = 900 MHz	Vds = 3V, Ids = 60 mA	dBm	—	35.5	—
P1dB	1dB Compressed Output Power[1]	f = 2 GHz	Vds = 3V, Ids = 60 mA	dBm	—	20.4	—
		f = 900 MHz	Vds = 3V, Ids = 60 mA	dBm	—	18.4	—

Notes:

1. Measurements obtained using production test board described in Figure 5.
2. Typical values measured from a sample size of 450 parts from 9 wafers.

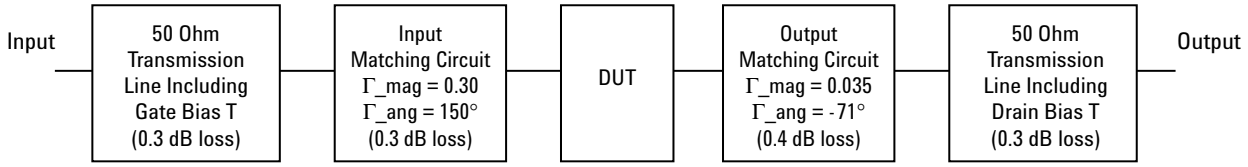

Figure 5. Block diagram of 2 GHz production test board used for Noise Figure, Associated Gain, P1dB, and OIP3 measurements. This circuit represents a trade-off between an optimal noise match and associated impedance matching circuit losses. Circuit losses have been de-embedded from actual measurements.

ATF-54143 Typical Performance Curves

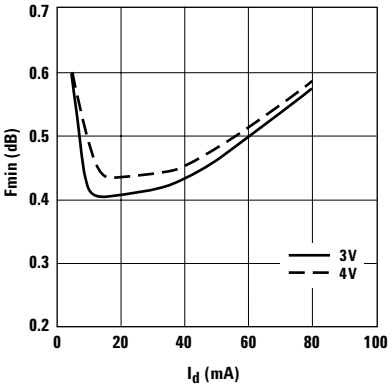

Figure 6. Fmin vs. I_{ds} and V_{ds} Tuned for Max OIP3 and Fmin at 2 GHz.

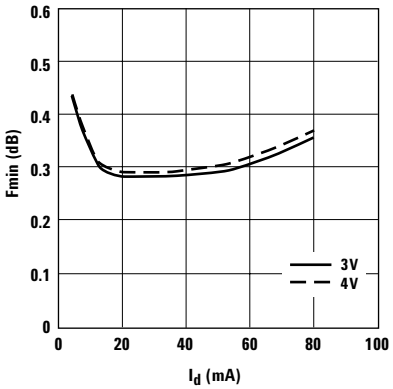

Figure 7. Fmin vs. I_{ds} and V_{ds} Tuned for Max OIP3 and Min NF at 900 MHz.

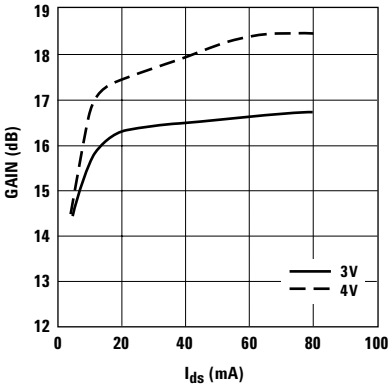

Figure 8. Gain vs. I_{ds} and V_{ds} Tuned for Max OIP3 and Fmin at 2 GHz.

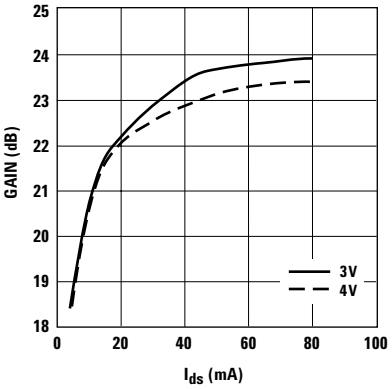

Figure 9. Gain vs. I_{ds} and V_{ds} Tuned for Max OIP3 and Fmin at 900 MHz.

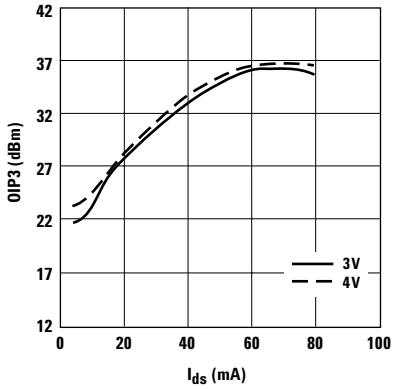

Figure 10. OIP3 vs. I_{ds} and V_{ds} Tuned for Max OIP3 and Fmin at 2 GHz.

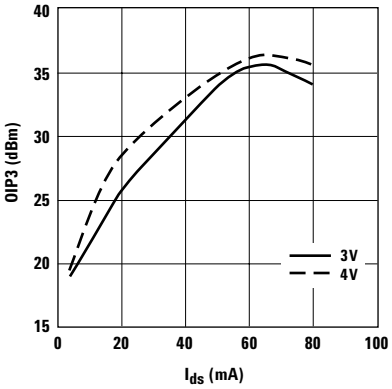

Figure 11. OIP3 vs. I_{ds} and V_{ds} Tuned for Max OIP3 and Fmin at 900 MHz.

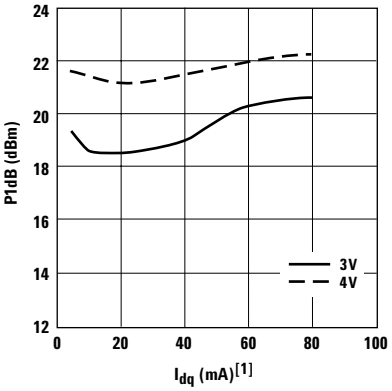

Figure 12. P1dB vs. I_{dq} and V_{ds} Tuned for Max OIP3 and Fmin at 2 GHz.

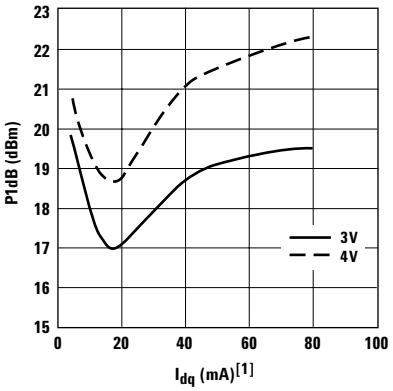

Figure 13. P1dB vs. I_{dq} and V_{ds} Tuned for Max OIP3 and Fmin at 900 MHz.

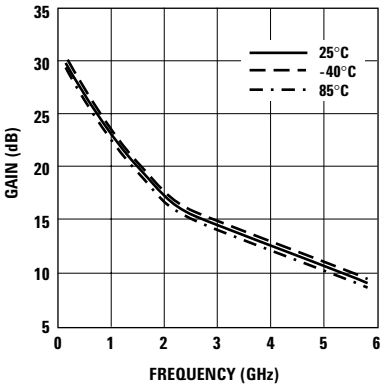

Figure 14. Gain vs. Frequency and Temp Tuned for Max OIP3 and Fmin at 3V, 60 mA.

Notes:

1. I_{dq} represents the quiescent drain current without RF drive applied. Under low values of I_{ds}, the application of RF drive will cause I_d to increase substantially as P1dB is approached.
2. Fmin values at 2 GHz and higher are based on measurements while the Fmins below 2 GHz have been extrapolated. The Fmin values are based on a set of 16 noise figure measurements made at 16 different impedances using an ATN NP5 test system. From these measurements a true Fmin is calculated. Refer to the noise parameter application section for more information.

ATF-54143 Typical Performance Curves, continued

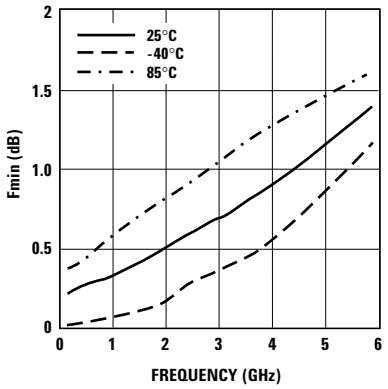

Figure 15. Fmin[2] vs. Frequency and Temp Tuned for Max OIP3 and Fmin at 3V, 60 mA.

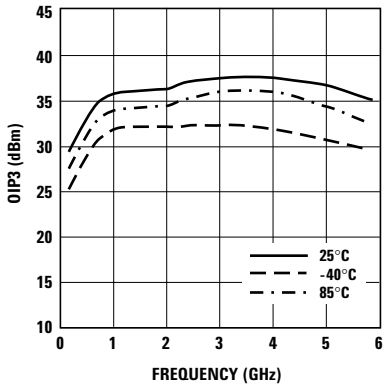

Figure 16. OIP3 vs. Frequency and Temp Tuned for Max OIP3 and Fmin at 3V, 60 mA.

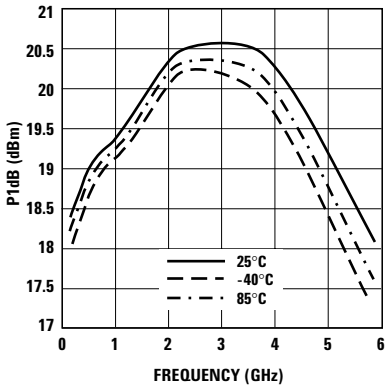

Figure 17. P1dB vs. Frequency and Temp Tuned for Max OIP3 and Fmin at 3V, 60 mA.

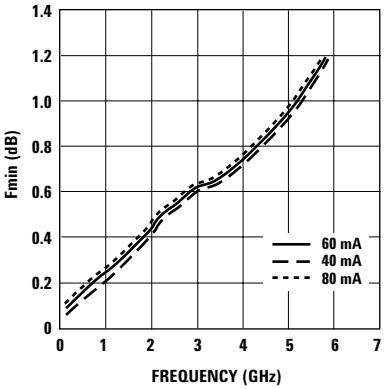

Figure 18. Fmin[1] vs. Frequency and I_{ds} at 3V.

ATF-54143 Reflection Coefficient Parameters tuned for Maximum Output IP3, V_{DS} = 3V, I_{DS} = 60 mA

Freq (GHz)	ΓOut_Mag.[1] (Mag)	ΓOut_Ang.[1] (Degrees)	OIP3 (dBm)	P1dB (dBm)
0.9	0.017	115	35.54	18.4
2.0	0.026	-85	36.23	20.38
3.9	0.013	173	37.54	20.28
5.8	0.025	102	35.75	18.09

Note:
1. Gamma out is the reflection coefficient of the matching circuit presented to the output of the device.

Note:
1. Fmin values at 2 GHz and higher are based on measurements while the Fmins below 2 GHz have been extrapolated. The Fmin values are based on a set of 16 noise figure measurements made at 16 different impedances using an ATN NP5 test system. From these measurements a true Fmin is calculated. Refer to the noise parameter application section for more information.

ATF-54143 Typical Scattering Parameters, V_{DS} = 3 V, I_{DS} = 40 mA

Freq.	S_{11}		S_{21}			S_{12}		S_{22}		MSG/MAG
GHz	Mag.	Ang.	dB	Mag.	Ang.	Mag.	Ang.	Mag.	Ang.	dB
0.1	0.99	-17.6	27.99	25.09	168.5	0.009	80.2	0.59	-12.8	34.45
0.5	0.83	-76.9	25.47	18.77	130.1	0.036	52.4	0.44	-54.6	27.17
0.9	0.72	-114	22.52	13.37	108	0.047	40.4	0.33	-78.7	24.54
1.0	0.70	-120.6	21.86	12.39	103.9	0.049	38.7	0.31	-83.2	24.03
1.5	0.65	-146.5	19.09	9.01	87.4	0.057	33.3	0.24	-99.5	21.99
1.9	0.63	-162.1	17.38	7.40	76.6	0.063	30.4	0.20	-108.6	20.70
2.0	0.62	-165.6	17.00	7.08	74.2	0.065	29.8	0.19	-110.9	20.37
2.5	0.61	178.5	15.33	5.84	62.6	0.072	26.6	0.15	-122.6	19.09
3.0	0.61	164.2	13.91	4.96	51.5	0.080	22.9	0.12	-137.5	17.92
4.0	0.63	138.4	11.59	3.80	31	0.094	14	0.10	176.5	16.06
5.0	0.66	116.5	9.65	3.04	11.6	0.106	4.2	0.14	138.4	14.57
6.0	0.69	97.9	8.01	2.51	-6.7	0.118	-6.1	0.17	117.6	13.28
7.0	0.71	80.8	6.64	2.15	-24.5	0.128	-17.6	0.20	98.6	12.25
8.0	0.72	62.6	5.38	1.86	-42.5	0.134	-29.3	0.22	73.4	11.42
9.0	0.76	45.2	4.20	1.62	-60.8	0.145	-40.6	0.27	52.8	10.48
10.0	0.83	28.2	2.84	1.39	-79.8	0.150	-56.1	0.37	38.3	9.66
11.0	0.85	13.9	1.42	1.18	-96.9	0.149	-69.3	0.45	25.8	8.98
12.0	0.88	-0.5	0.23	1.03	-112.4	0.150	-81.6	0.51	12.7	8.35
13.0	0.89	-15.1	-0.86	0.91	-129.7	0.149	-95.7	0.54	-4.1	7.84
14.0	0.87	-31.6	-2.18	0.78	-148	0.143	-110.3	0.61	-20.1	7.36
15.0	0.88	-46.1	-3.85	0.64	-164.8	0.132	-124	0.65	-34.9	6.87
16.0	0.87	-54.8	-5.61	0.52	-178.4	0.121	-134.6	0.70	-45.6	6.37
17.0	0.87	-62.8	-7.09	0.44	170.1	0.116	-144.1	0.73	-55.9	5.81
18.0	0.92	-73.6	-8.34	0.38	156.1	0.109	-157.4	0.76	-68.7	5.46

Typical Noise Parameters, V_{DS} = 3 V, I_{DS} = 40 mA

Freq	F_{min}	Γ_{opt}	Γ_{opt}	$R_{n/50}$	G_a
GHz	dB	Mag.	Ang.		dB
0.5	0.17	0.34	34.80	0.04	27.83
0.9	0.22	0.32	53.00	0.04	23.57
1.0	0.24	0.32	60.50	0.04	22.93
1.9	0.42	0.29	108.10	0.04	18.35
2.0	0.45	0.29	111.10	0.04	17.91
2.4	0.51	0.30	136.00	0.04	16.39
3.0	0.59	0.32	169.90	0.05	15.40
3.9	0.69	0.34	-151.60	0.05	13.26
5.0	0.90	0.45	-119.50	0.09	11.89
5.8	1.14	0.50	-101.60	0.16	10.95
6.0	1.17	0.52	-99.60	0.18	10.64
7.0	1.24	0.58	-79.50	0.33	9.61
8.0	1.57	0.60	-57.90	0.56	8.36
9.0	1.64	0.69	-39.70	0.87	7.77
10.0	1.8	0.80	-22.20	1.34	7.68

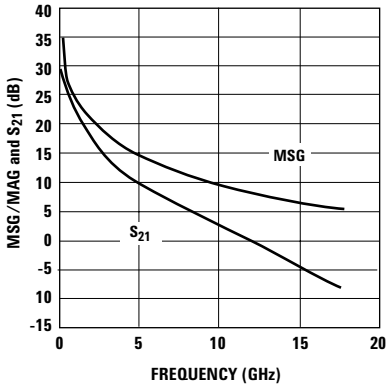

Figure 19. MSG/MAG and $|S_{21}|^2$ vs. Frequency at 3 V, 40 mA.

Notes:

1. F_{min} values at 2 GHz and higher are based on measurements while the F_{mins} below 2 GHz have been extrapolated. The F_{min} values are based on a set of 16 noise figure measurements made at 16 different impedances using an ATN NP5 test system. From these measurements a true F_{min} is calculated. Refer to the noise parameter application section for more information.
2. S and noise parameters are measured on a microstrip line made on 0.025 inch thick alumina carrier. The input reference plane is at the end of the gate lead. The output reference plane is at the end of the drain lead. The parameters include the effect of four plated through via holes connecting source landing pads on top of the test carrier to the microstrip ground plane on the bottom side of the carrier. Two 0.020 inch diameter via holes are placed within 0.010 inch from each source lead contact point, one via on each side of that point.

ATF-54143 Typical Scattering Parameters, V_{DS} = 3V, I_{DS} = 60 mA

Freq.	S_{11}		S_{21}			S_{12}		S_{22}		MSG/MAG
GHz	Mag.	Ang.	dB	Mag.	Ang.	Mag.	Ang.	Mag.	Ang.	dB
0.1	0.99	-18.9	28.84	27.66	167.6	0.01	80.0	0.54	-14.0	34.88
0.5	0.81	-80.8	26.04	20.05	128.0	0.03	52.4	0.40	-58.8	27.84
0.9	0.71	-117.9	22.93	14.01	106.2	0.04	41.8	0.29	-83.8	25.13
1.0	0.69	-124.4	22.24	12.94	102.2	0.05	40.4	0.27	-88.5	24.59
1.5	0.64	-149.8	19.40	9.34	86.1	0.05	36.1	0.21	-105.2	22.46
1.9	0.62	-164.9	17.66	7.64	75.6	0.06	33.8	0.17	-114.7	21.05
2.0	0.62	-168.3	17.28	7.31	73.3	0.06	33.3	0.17	-117.0	20.71
2.5	0.60	176.2	15.58	6.01	61.8	0.07	30.1	0.13	-129.7	19.34
3.0	0.60	162.3	14.15	5.10	51.0	0.08	26.5	0.11	-146.5	18.15
4.0	0.62	137.1	11.81	3.90	30.8	0.09	17.1	0.10	165.2	16.17
5.0	0.66	115.5	9.87	3.11	11.7	0.11	6.8	0.14	131.5	14.64
6.0	0.69	97.2	8.22	2.58	-6.4	0.12	-3.9	0.18	112.4	13.36
7.0	0.70	80.2	6.85	2.20	-24.0	0.13	-15.8	0.20	94.3	12.29
8.0	0.72	62.2	5.58	1.90	-41.8	0.14	-28.0	0.23	70.1	11.45
9.0	0.76	45.0	4.40	1.66	-59.9	0.15	-39.6	0.29	50.6	10.53
10.0	0.83	28.4	3.06	1.42	-78.7	0.15	-55.1	0.38	36.8	9.71
11.0	0.85	13.9	1.60	1.20	-95.8	0.15	-68.6	0.46	24.4	9.04
12.0	0.88	-0.2	0.43	1.05	-111.1	0.15	-80.9	0.51	11.3	8.43
13.0	0.89	-14.6	-0.65	0.93	-128.0	0.15	-94.9	0.55	-5.2	7.94
14.0	0.88	-30.6	-1.98	0.80	-146.1	0.14	-109.3	0.61	-20.8	7.43
15.0	0.88	-45.0	-3.62	0.66	-162.7	0.13	-122.9	0.66	-35.0	6.98
16.0	0.88	-54.5	-5.37	0.54	-176.6	0.12	-133.7	0.70	-45.8	6.49
17.0	0.88	-62.5	-6.83	0.46	171.9	0.12	-143.2	0.73	-56.1	5.95
18.0	0.92	-73.4	-8.01	0.40	157.9	0.11	-156.3	0.76	-68.4	5.66

Typical Noise Parameters, V_{DS} = 3V, I_{DS} = 60 mA

Freq	F_{min}	Γ_{opt}	Γ_{opt}	$R_{n/50}$	G_a
GHz	dB	Mag.	Ang.		dB
0.5	0.15	0.34	42.3	0.04	28.50
0.9	0.20	0.32	62.8	0.04	24.18
1.0	0.22	0.32	67.6	0.04	23.47
1.9	0.42	0.27	116.3	0.04	18.67
2.0	0.45	0.27	120.1	0.04	18.29
2.4	0.52	0.26	145.8	0.04	16.65
3.0	0.59	0.29	178.0	0.05	15.56
3.9	0.70	0.36	-145.4	0.05	13.53
5.0	0.93	0.47	-116.0	0.10	12.13
5.8	1.16	0.52	-98.9	0.18	11.10
6.0	1.19	0.55	-96.5	0.20	10.95
7.0	1.26	0.60	-77.1	0.37	9.73
8.0	1.63	0.62	-56.1	0.62	8.56
9.0	1.69	0.70	-38.5	0.95	7.97
10.0	1.73	0.79	-21.5	1.45	7.76

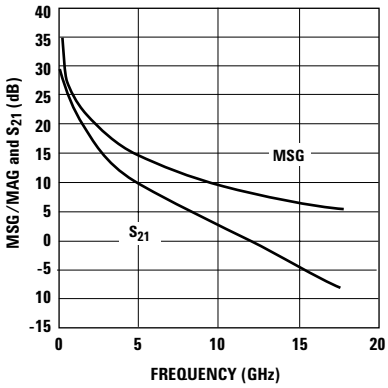

Figure 20. MSG/MAG and $|S_{21}|^2$ vs. Frequency at 3V, 60 mA.

Notes:

1. F_{min} values at 2 GHz and higher are based on measurements while the F_{mins} below 2 GHz have been extrapolated. The F_{min} values are based on a set of 16 noise figure measurements made at 16 different impedances using an ATN NP5 test system. From these measurements a true F_{min} is calculated. Refer to the noise parameter application section for more information.
2. S and noise parameters are measured on a microstrip line made on 0.025 inch thick alumina carrier. The input reference plane is at the end of the gate lead. The output reference plane is at the end of the drain lead. The parameters include the effect of four plated through via holes connecting source landing pads on top of the test carrier to the microstrip ground plane on the bottom side of the carrier. Two 0.020 inch diameter via holes are placed within 0.010 inch from each source lead contact point, one via on each side of that point.

ATF-54143 Typical Scattering Parameters, V_{DS} = 3V, I_{DS} = 80 mA

Freq.	S_{11}		S_{21}			S_{12}		S_{22}		MSG/MAG
GHz	Mag.	Ang.	dB	Mag.	Ang.	Mag.	Ang.	Mag.	Ang.	dB
0.1	0.98	-20.4	28.32	26.05	167.1	0.01	79.4	0.26	-27.6	34.16
0.5	0.80	-85.9	25.32	18.45	126.8	0.04	53.3	0.29	-104.9	27.10
0.9	0.72	-123.4	22.10	12.73	105.2	0.05	43.9	0.30	-138.8	24.15
1.0	0.70	-129.9	21.40	11.75	101.3	0.05	42.7	0.30	-144.3	23.63
1.5	0.66	-154.6	18.55	8.46	85.4	0.06	38.6	0.30	-165.0	21.35
1.9	0.65	-169.5	16.81	6.92	74.9	0.07	35.7	0.29	-177.6	19.89
2.0	0.64	-172.8	16.42	6.62	72.6	0.07	35.0	0.29	179.4	19.52
2.5	0.64	172.1	14.69	5.42	61.1	0.09	30.6	0.29	164.4	18.05
3.0	0.63	158.5	13.24	4.59	50.1	0.10	25.5	0.29	150.2	16.80
4.0	0.66	133.8	10.81	3.47	29.9	0.12	13.4	0.33	126.1	14.76
5.0	0.69	112.5	8.74	2.74	11.1	0.13	1.2	0.39	107.8	13.20
6.0	0.72	94.3	7.03	2.25	-6.5	0.14	-11.3	0.42	91.8	11.96
7.0	0.73	77.4	5.63	1.91	-23.5	0.15	-24.5	0.44	75.5	10.97
8.0	0.74	59.4	4.26	1.63	-41.1	0.16	-38.1	0.47	55.5	10.14
9.0	0.78	42.1	2.98	1.41	-58.7	0.17	-51.1	0.52	37.8	9.32
10.0	0.84	25.6	1.51	1.19	-76.4	0.16	-66.8	0.59	24.0	8.60
11.0	0.86	11.4	0.00	1.00	-92.0	0.16	-79.8	0.64	11.8	8.04
12.0	0.88	-2.6	-1.15	0.88	-105.9	0.16	-91.7	0.68	-0.8	7.52
13.0	0.89	-17.0	-2.18	0.78	-121.7	0.15	-105.6	0.70	-16.7	7.12
14.0	0.87	-33.3	-3.48	0.67	-138.7	0.14	-119.5	0.73	-31.7	6.77
15.0	0.87	-47.3	-5.02	0.56	-153.9	0.13	-132.3	0.76	-44.9	6.42
16.0	0.86	-55.6	-6.65	0.47	-165.9	0.12	-141.7	0.78	-54.9	5.99
17.0	0.86	-63.4	-7.92	0.40	-175.9	0.11	-150.4	0.79	-64.2	5.55
18.0	0.91	-74.2	-8.92	0.36	171.2	0.10	-163.0	0.81	-76.2	5.37

Typical Noise Parameters, V_{DS} = 3V, I_{DS} = 80 mA

Freq	F_{min}	Γ_{opt}	Γ_{opt}	$R_{n/50}$	G_a
GHz	dB	Mag.	Ang.		dB
0.5	0.19	0.23	66.9	0.04	27.93
0.9	0.24	0.24	84.3	0.04	24.13
1.0	0.25	0.25	87.3	0.04	23.30
1.9	0.43	0.28	134.8	0.04	18.55
2.0	0.42	0.29	138.8	0.04	18.15
2.4	0.51	0.30	159.5	0.03	16.44
3.0	0.61	0.35	-173	0.03	15.13
3.9	0.70	0.41	-141.6	0.06	12.97
5.0	0.94	0.52	-113.5	0.13	11.42
5.8	1.20	0.56	-97.1	0.23	10.48
6.0	1.26	0.58	-94.8	0.26	10.11
7.0	1.34	0.62	-75.8	0.46	8.86
8.0	1.74	0.63	-55.5	0.76	7.59
9.0	1.82	0.71	-37.7	1.17	6.97
10.0	1.94	0.79	-20.8	1.74	6.65

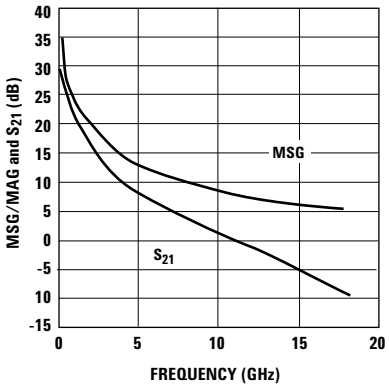

Figure 21. MSG/MAG and $|S_{21}|^2$ vs. Frequency at 3V, 80 mA.

Notes:

1. F_{min} values at 2 GHz and higher are based on measurements while the F_{mins} below 2 GHz have been extrapolated. The F_{min} values are based on a set of 16 noise figure measurements made at 16 different impedances using an ATN NP5 test system. From these measurements a true F_{min} is calculated. Refer to the noise parameter application section for more information.
2. S and noise parameters are measured on a microstrip line made on 0.025 inch thick alumina carrier. The input reference plane is at the end of the gate lead. The output reference plane is at the end of the drain lead. The parameters include the effect of four plated through via holes connecting source landing pads on top of the test carrier to the microstrip ground plane on the bottom side of the carrier. Two 0.020 inch diameter via holes are placed within 0.010 inch from each source lead contact point, one via on each side of that point.

ATF-54143 Typical Scattering Parameters, V_{DS} = 4V, I_{DS} = 60 mA

Freq.	S_{11}		S_{21}			S_{12}		S_{22}		MSG/MAG
GHz	Mag.	Ang.	dB	Mag.	Ang.	Mag.	Ang.	Mag.	Ang.	dB
0.1	0.99	-18.6	28.88	27.80	167.8	0.01	80.1	0.58	-12.6	35.41
0.5	0.81	-80.2	26.11	20.22	128.3	0.03	52.4	0.42	-52.3	28.14
0.9	0.71	-117.3	23.01	14.15	106.4	0.04	41.7	0.31	-73.3	25.38
1.0	0.69	-123.8	22.33	13.07	102.4	0.04	40.2	0.29	-76.9	24.83
1.5	0.64	-149.2	19.49	9.43	86.2	0.05	36.1	0.22	-89.4	22.75
1.9	0.62	-164.5	17.75	7.72	75.7	0.06	34.0	0.18	-95.5	21.32
2.0	0.61	-167.8	17.36	7.38	73.3	0.06	33.5	0.18	-97.0	21.04
2.5	0.60	176.6	15.66	6.07	61.9	0.07	30.7	0.14	-104.0	19.64
3.0	0.60	162.6	14.23	5.15	51.1	0.07	27.3	0.11	-113.4	18.48
4.0	0.62	137.4	11.91	3.94	30.9	0.09	18.7	0.07	-154.7	16.46
5.0	0.65	115.9	10.00	3.16	11.7	0.10	9.0	0.09	152.5	14.96
6.0	0.68	97.6	8.36	2.62	-6.6	0.11	-1.4	0.12	127.9	13.61
7.0	0.70	80.6	7.01	2.24	-24.3	0.12	-12.9	0.15	106.9	12.57
8.0	0.72	62.6	5.76	1.94	-42.3	0.13	-24.7	0.17	78.9	11.67
9.0	0.76	45.4	4.60	1.70	-60.5	0.14	-36.1	0.23	56.8	10.72
10.0	0.83	28.5	3.28	1.46	-79.6	0.15	-51.8	0.32	42.1	9.88
11.0	0.86	14.1	1.87	1.24	-97.0	0.15	-65.4	0.41	29.4	9.17
12.0	0.88	-0.4	0.69	1.08	-112.8	0.15	-78.0	0.47	16.0	8.53
13.0	0.90	-14.9	-0.39	0.96	-130.2	0.15	-92.2	0.51	-1.1	7.99
14.0	0.87	-31.4	-1.72	0.82	-148.8	0.15	-107.3	0.58	-17.6	7.46
15.0	0.88	-46.0	-3.38	0.68	-166.0	0.14	-121.2	0.63	-32.6	6.97
16.0	0.88	-54.8	-5.17	0.55	179.8	0.13	-132.2	0.69	-43.7	6.41
17.0	0.87	-62.8	-6.73	0.46	168.4	0.12	-142.3	0.72	-54.2	5.85
18.0	0.92	-73.7	-7.93	0.40	154.3	0.11	-155.6	0.75	-67.2	5.54

Typical Noise Parameters, V_{DS} = 4V, I_{DS} = 60 mA

Freq	F_{min}	Γ_{opt}	Γ_{opt}	$R_{n/50}$	G_a
GHz	dB	Mag.	Ang.		dB
0.5	0.17	0.33	34.30	0.03	28.02
0.9	0.25	0.31	60.30	0.04	24.12
1.0	0.27	0.31	68.10	0.04	23.43
1.9	0.45	0.27	115.00	0.04	18.72
2.0	0.49	0.27	119.80	0.04	18.35
2.4	0.56	0.26	143.50	0.04	16.71
3.0	0.63	0.28	176.80	0.04	15.58
3.9	0.73	0.35	-145.90	0.05	13.62
5.0	0.96	0.47	-116.20	0.11	12.25
5.8	1.20	0.52	-98.80	0.19	11.23
6.0	1.23	0.54	-96.90	0.21	11.02
7.0	1.33	0.60	-77.40	0.38	9.94
8.0	1.66	0.63	-56.20	0.64	8.81
9.0	1.71	0.71	-38.60	0.99	8.22
10.0	1.85	0.82	-21.30	1.51	8.12

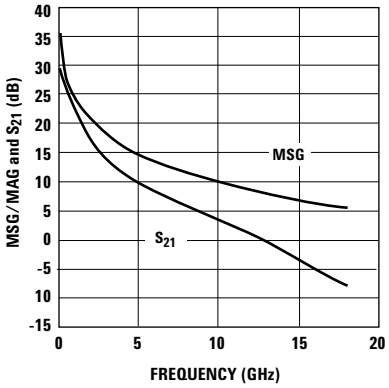

Figure 22. MSG/MAG and $|S_{21}|^2$ vs. Frequency at 4V, 60 mA.

Notes:

1. F_{min} values at 2 GHz and higher are based on measurements while the F_{mins} below 2 GHz have been extrapolated. The F_{min} values are based on a set of 16 noise figure measurements made at 16 different impedances using an ATN NP5 test system. From these measurements a true F_{min} is calculated. Refer to the noise parameter application section for more information.
2. S and noise parameters are measured on a microstrip line made on 0.025 inch thick alumina carrier. The input reference plane is at the end of the gate lead. The output reference plane is at the end of the drain lead. The parameters include the effect of four plated through via holes connecting source landing pads on top of the test carrier to the microstrip ground plane on the bottom side of the carrier. Two 0.020 inch diameter via holes are placed within 0.010 inch from each source lead contact point, one via on each side of that point.

ATF-54143 Applications Information

Introduction

Agilent Technologies's ATF-54143 is a low noise enhancement mode PHEMT designed for use in low cost commercial applications in the VHF through 6 GHz frequency range. As opposed to a typical depletion mode PHEMT where the gate must be made negative with respect to the source for proper operation, an enhancement mode PHEMT requires that the gate be made more positive than the source for normal operation. Therefore a negative power supply voltage is not required for an enhancement mode device. Biasing an enhancement mode PHEMT is much like biasing the typical bipolar junction transistor. Instead of a 0.7V base to emitter voltage, the ATF-54143 enhancement mode PHEMT requires about a 0.6V potential between the gate and source for a nominal drain current of 60 mA.

Matching Networks

The techniques for impedance matching an enhancement mode device are very similar to those for matching a depletion mode device. The only difference is in the method of supplying gate bias. S and Noise Parameters for various bias conditions are listed in this data sheet. The circuit shown in Figure 1 shows a typical LNA circuit normally used for 900 and 1900 MHz applications (Consult the Agilent Technologies website for application notes covering specific applications). High pass impedance matching networks consisting of L1/C1 and L4/C4 provide the appropriate match for noise figure, gain, S11 and S22. The high pass structure also provides low frequency gain reduction which can be beneficial from the standpoint of improving out-of-band rejection at lower frequencies.

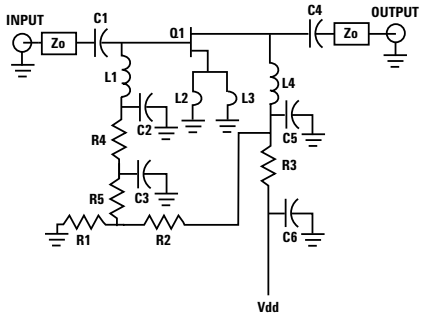

Figure 1. Typical ATF-54143 LNA with Passive Biasing.

Capacitors C2 and C5 provide a low impedance in-band RF bypass for the matching networks. Resistors R3 and R4 provide a very important low frequency termination for the device. The resistive termination improves low frequency stability. Capacitors C3 and C6 provide the low frequency RF bypass for resistors R3 and R4. Their value should be chosen carefully as C3 and C6 also provide a termination for low frequency mixing products. These mixing products are as a result of two or more in-band signals mixing and producing third order in-band distortion products. The low frequency or difference mixing products are bypassed by C3 and C6. For best suppression of third order distortion products based on the CDMA 1.25 MHz signal spacing, C3 and C6 should be 0.1 µF in value. Smaller values of capacitance will not suppress the generation of the 1.25 MHz difference signal and as a result will show up as poorer two tone IP3 results.

Bias Networks

One of the major advantages of the enhancement mode technology is that it allows the designer to be able to dc ground the source leads and then merely apply a positive voltage on the gate to set the desired amount of quiescent drain current I_d.

Whereas a depletion mode PHEMT pulls maximum drain current when $V_{gs} = 0V$, an enhancement mode PHEMT pulls only a small amount of leakage current when $V_{gs} = 0V$. Only when V_{gs} is increased above V_{to}, the device threshold voltage, will drain current start to flow. At a V_{ds} of 3V and a nominal V_{gs} of 0.6V, the drain current I_d will be approximately 60 mA. The data sheet suggests a minimum and maximum V_{gs} over which the desired amount of drain current will be achieved. It is also important to note that if the gate terminal is left open circuited, the device will pull some amount of drain current due to leakage current creating a voltage differential between the gate and source terminals.

Passive Biasing

Passive biasing of the ATF-54143 is accomplished by the use of a voltage divider consisting of R1 and R2. The voltage for the divider is derived from the drain voltage which provides a form of voltage feedback through the use of R3 to help keep drain current constant. Resistor R5 (approximately 10kΩ) provides current limiting for the gate of enhancement mode devices such as the ATF-54143. This is especially important when the device is driven to P_{1dB} or P_{SAT}.

Resistor R3 is calculated based on desired V_{ds}, I_{ds} and available power supply voltage.

$$R3 = \frac{V_{DD} - V_{ds}}{I_{ds} + I_{BB}} \quad (1)$$

V_{DD} is the power supply voltage.
V_{ds} is the device drain to source voltage.
I_{ds} is the desired drain current.
I_{BB} is the current flowing through the R1/R2 resistor voltage divider network.

The values of resistors R1 and R2 are calculated with the following formulas

$$R1 = \frac{V_{gs}}{I_{BB}} \quad (2)$$

$$R2 = \frac{(V_{ds} - V_{gs})\,R1}{V_{gs}} \quad (3)$$

Example Circuit

$V_{DD} = 5V$
$V_{ds} = 3V$
$I_{ds} = 60$ mA
$V_{gs} = 0.59V$

Choose I_{BB} to be at least 10X the normal expected gate leakage current. I_{BB} was chosen to be 2 mA for this example. Using equations (1), (2), and (3) the resistors are calculated as follows

R1 = 295Ω
R2 = 1205Ω
R3 = 32.3Ω

Active Biasing

Active biasing provides a means of keeping the quiescent bias point constant over temperature and constant over lot to lot variations in device dc performance. The advantage of the active biasing of an enhancement mode PHEMT versus a depletion mode PHEMT is that a negative power source is not required. The techniques of active biasing an enhancement mode device are very similar to those used to bias a bipolar junction transistor.

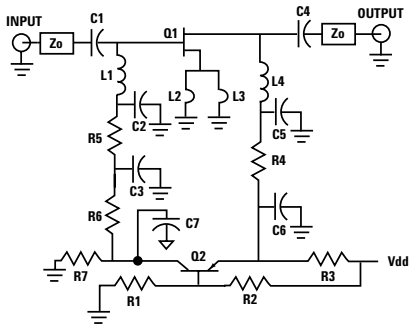

Figure 2. Typical ATF-54143 LNA with Active Biasing.

An active bias scheme is shown in Figure 2. R1 and R2 provide a constant voltage source at the base of a PNP transistor at Q2. The constant voltage at the base of Q2 is raised by 0.7 volts at the emitter. The constant emitter voltage plus the regulated V_{DD} supply are present across resistor R3. Constant voltage across R3 provides a constant current supply for the drain current. Resistors R1 and R2 are used to set the desired Vds. The combined series value of these resistors also sets the amount of extra current consumed by the bias network. The equations that describe the circuit's operation are as follows.

$$V_E = V_{ds} + (I_{ds} \cdot R4) \quad (1)$$

$$R3 = \frac{V_{DD} - V_E}{I_{ds}} \quad (2)$$

$$V_B = V_E - V_{BE} \quad (3)$$

$$V_B = \frac{R1}{R1 + R2} V_{DD} \quad (4)$$

$$V_{DD} = I_{BB}\,(R1 + R2) \quad (5)$$

Rearranging equation (4) provides the following formula

$$R2 = \frac{R_1\,(V_{DD} - V_B)}{V_B} \quad (4A)$$

and rearranging equation (5) provides the following formula

$$R1 = \frac{V_{DD}}{I_{BB}\left(1 + \frac{V_{DD} - V_B}{V_B}\right)} \quad (5A)$$

Example Circuit

$V_{DD} = 5V$
$V_{ds} = 3V$
$I_{ds} = 60$ mA
R4 = 10Ω
$V_{BE} = 0.7V$

Equation (1) calculates the required voltage at the emitter of the PNP transistor based on desired V_{ds} and I_{ds} through resistor R4 to be 3.6V. Equation (2) calculates the value of resistor R3 which determines the drain current I_{ds}. In the example R3 = 23.3Ω. Equation (3) calculates the voltage required at the junction of resistors R1 and R2. This voltage plus the step-up of the base emitter junction determines the regulated V_{ds}. Equations (4) and (5) are solved simultaneously to determine the value of resistors R1 and R2. In the example R1 = 1450Ω and R2 = 1050Ω. R7 is chosen to be 1kΩ. This resistor keeps a small amount of current flowing through Q2 to help maintain bias stability. R6 is chosen to be 10kΩ. This value of resistance is necessary to limit Q1 gate current in the presence of high RF drive level (especially when Q1 is driven to P_{1dB} gain compression point).

ATF-54143 Die Model

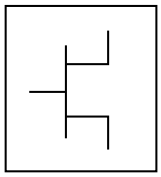

Advanced_Curtice2_Model
MESFETM1

NFET=yes	Rf=	Crf=0.1 F	N=
PFET=no	Gscap=2	Gsfwd=	Fnc=1 MHz
Vto=0.3	Cgs=1.73 pF	Gsrev=	R=0.08
Beta=0.9	Cgd=0.255 pF	Gdfwd=	P=0.2
Lambda=82e-3	Gdcap=2	Gdrev=	C=0.1
Alpha=13	Fc=0.65	R1=	Taumdl=no
Tau=	Rgd=0.25 Ohm	R2=	wVgfwd=
Tnom=16.85	Rd=1.0125 Ohm	Vbi=0.8	wBvgs=
Idstc=	Rg=1.0 Ohm	Vbr=	wBvgd=
Ucrit=-0.72	Rs=0.3375 Ohm	Vjr=	wBvds=
Vgexp=1.91	Ld=	Is=	wIdsmax=
Gamds=1e-4	Lg=0.18 nH	Ir=	wPmax=
Vtotc=	Ls=	Imax=	AllParams=
Betatce=	Cds=0.27 pF	Xti=	
Rgs=0.25 Ohm	Rc=250 Ohm	Eg=	

ATF-54143 curtice ADS Model

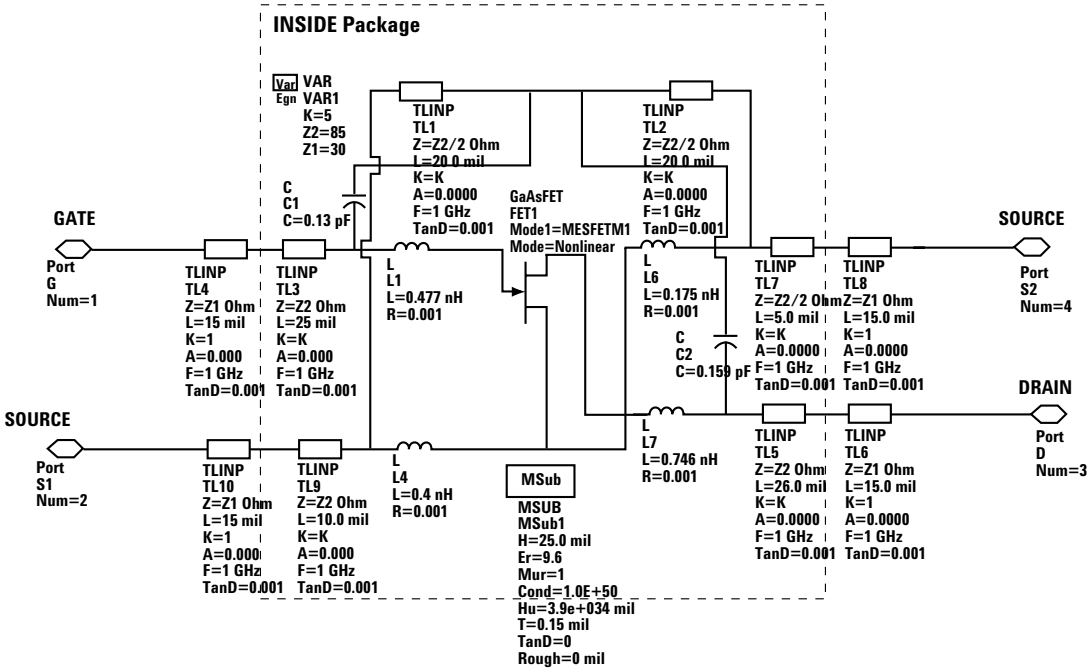

Designing with S and Noise Parameters and the Non-Linear Model

The non-linear model describing the ATF-54143 includes both the die and associated package model. The package model includes the effect of the pins but does not include the effect of the additional source inductance associated with grounding the source leads through the printed circuit board. The device S and Noise Parameters do include the effect of 0.020 inch thickness printed circuit board vias. When comparing simulation results between the measured S parameters and the simulated non-linear model, be sure to include the effect of the printed circuit board to get an accurate comparison. This is shown schematically in Figure 3.

For Further Information

The information presented here is an introduction to the use of the ATF-54143 enhancement mode PHEMT. More detailed application circuit information is available from Agilent Technologies. Consult the web page or your local Agilent Technologies sales representative.

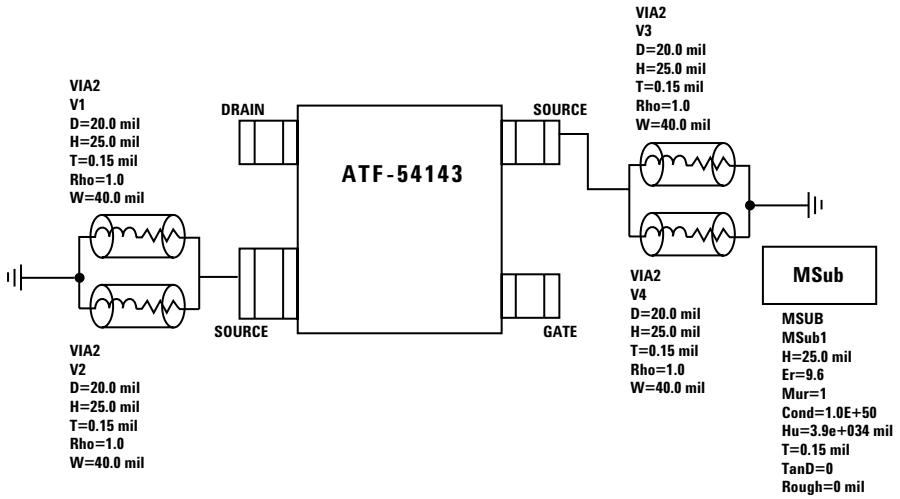

Figure 3. Adding Vias to the ATF-54143 Non-Linear Model for Comparison to Measured S and Noise Parameters.

Noise Parameter Applications Information

F_{min} values at 2 GHz and higher are based on measurements while the F_{mins} below 2 GHz have been extrapolated. The F_{min} values are based on a set of 16 noise figure measurements made at 16 different impedances using an ATN NP5 test system. From these measurements, a true F_{min} is calculated. F_{min} represents the true minimum noise figure of the device when the device is presented with an impedance matching network that transforms the source impedance, typically 50Ω, to an impedance represented by the reflection coefficient G_o. The designer must design a matching network that will present G_o to the device with minimal associated circuit losses. The noise figure of the completed amplifier is equal to the noise figure of the device plus the losses of the matching network preceding the device. The noise figure of the device is equal to F_{min} only when the device is presented with G_o. If the reflection coefficient of the matching network is other than G_o, then the noise figure of the device will be greater than F_{min} based on the following equation.

$$NF = F_{min} + \frac{4\,R_n}{Zo}\,\frac{|\Gamma_s - \Gamma_o|^2}{(|1+\Gamma_o|^2)\,(1-|\Gamma_s|^2)}$$

Where R_n/Z_o is the normalized noise resistance, Γ_o is the optimum reflection coefficient required to produce F_{min} and Γ_s is the reflection coefficient of the source impedance actually presented to the device. The losses of the matching networks are non-zero and they will also add to the noise figure of the device creating a higher amplifier noise figure. The losses of the matching networks are related to the Q of the components and associated printed circuit board loss. Γ_o is typically fairly low at higher frequencies and increases as frequency is lowered. Larger gate width devices will typically have a lower Γ_o as compared to narrower gate width devices. Typically for FETs, the higher Γ_o usually infers that an impedance much higher than 50Ω is required for the device to produce F_{min}. At VHF frequencies and even lower L Band frequencies, the required impedance can be in the vicinity of several thousand ohms. Matching to such a high impedance requires very hi-Q components in order to minimize circuit losses. As an example at 900 MHz, when airwwound coils (Q > 100) are used for matching networks, the loss can still be up to 0.25 dB which will add directly to the noise figure of the device. Using muiltilayer molded inductors with Qs in the 30 to 50 range results in additional loss over the airwound coil. Losses as high as 0.5 dB or greater add to the typical 0.15 dB F_{min} of the device creating an amplifier noise figure of nearly 0.65 dB. A discussion concerning calculated and measured circuit losses and their effect on amplifier noise figure is covered in Agilent Application 1085.

Ordering Information

Part Number	No. of Devices	Container
ATF-54143-TR1	3000	7″ Reel
ATF-54143-TR2	10000	13″Reel
ATF-54143-BLK	100	antistatic bag

Package Dimensions
Outline 43
SOT-343 (SC70 4-lead)

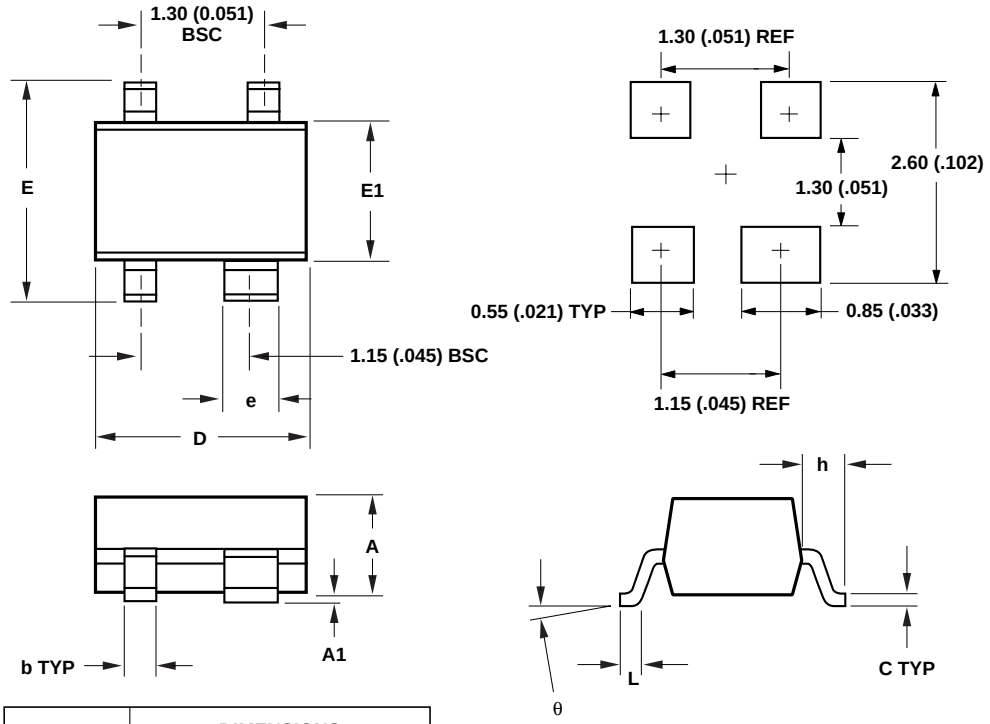

SYMBOL	DIMENSIONS	
	MIN.	MAX.
A	0.80 (0.031)	1.00 (0.039)
A1	0 (0)	0.10 (0.004)
b	0.25 (0.010)	0.35 (0.014)
C	0.10 (0.004)	0.20 (0.008)
D	1.90 (0.075)	2.10 (0.083)
E	2.00 (0.079)	2.20 (0.087)
e	0.55 (0.022)	0.65 (0.025)
h	0.450 TYP (0.018)	
E1	1.15 (0.045)	1.35 (0.053)
L	0.10 (0.004)	0.35 (0.014)
θ	0	10

DIMENSIONS ARE IN MILLIMETERS (INCHES)

Device Orientation

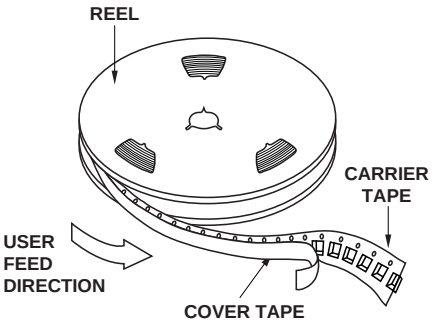

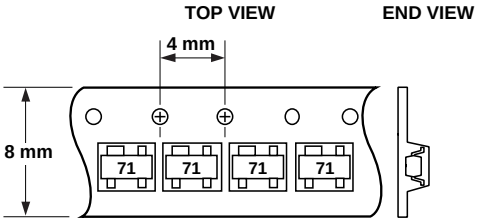

Tape Dimensions For Outline 4T

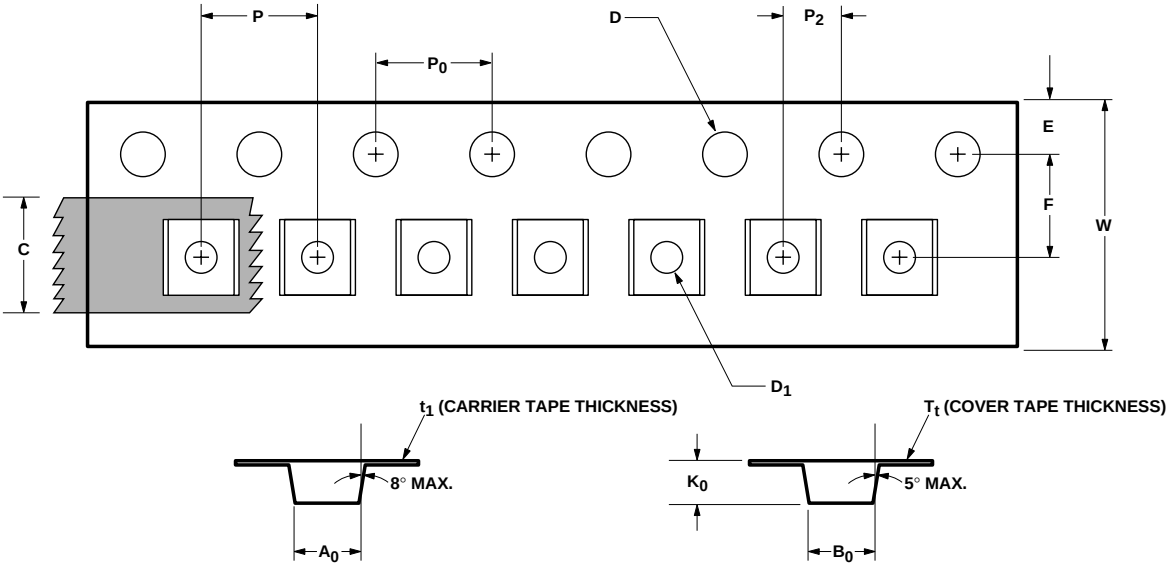

DESCRIPTION		SYMBOL	SIZE (mm)	SIZE (INCHES)
CAVITY	LENGTH	A_0	2.24 ± 0.10	0.088 ± 0.004
	WIDTH	B_0	2.34 ± 0.10	0.092 ± 0.004
	DEPTH	K_0	1.22 ± 0.10	0.048 ± 0.004
	PITCH	P	4.00 ± 0.10	0.157 ± 0.004
	BOTTOM HOLE DIAMETER	D_1	1.00 + 0.25	0.039 + 0.010
PERFORATION	DIAMETER	D	1.55 ± 0.05	0.061 ± 0.002
	PITCH	P_0	4.00 ± 0.10	0.157 ± 0.004
	POSITION	E	1.75 ± 0.10	0.069 ± 0.004
CARRIER TAPE	WIDTH	W	8.00 ± 0.30	0.315 ± 0.012
	THICKNESS	t_1	0.255 ± 0.013	0.010 ± 0.0005
COVER TAPE	WIDTH	C	5.4 ± 0.10	0.205 ± 0.004
	TAPE THICKNESS	T_t	0.062 ± 0.001	0.0025 ± 0.00004
DISTANCE	CAVITY TO PERFORATION (WIDTH DIRECTION)	F	3.50 ± 0.05	0.138 ± 0.002
	CAVITY TO PERFORATION (LENGTH DIRECTION)	P_2	2.00 ± 0.05	0.079 ± 0.002

For product information and a complete list of Agilent contacts and distributors, please go to our web site.

www.agilent.com/semiconductors

E-mail: SemiconductorSupport@agilent.com

Data subject to change.

Copyright © 2002 Agilent Technologies, Inc.

Obsoletes 5988-2722EN
May 1, 2002
5988-6275EN

Agilent Technologies