REVISIONS					
REV	ECO	DESCRIPTION	DATE	BY	APPR
A1	--	RELEASE NEW DRAWING	13NOV15	SULLEN	TOMMY
A2	C0765S	UPDATE SPECIFICATIONS	23NOV17	ROOKIE	TOMMY
A3	C0870S	Change the appearance of the retaining ring	26JUN18	KASOON	TOMMY

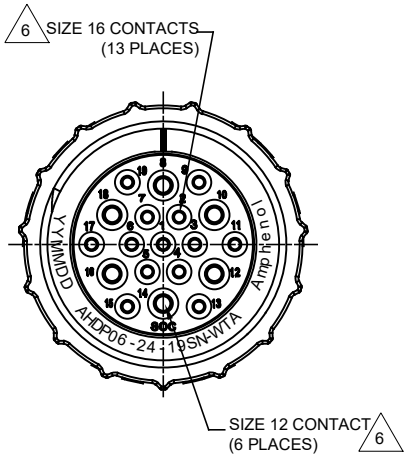

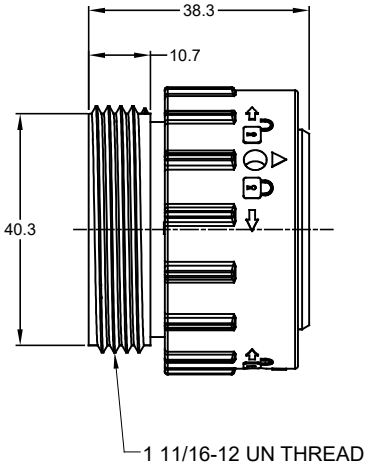

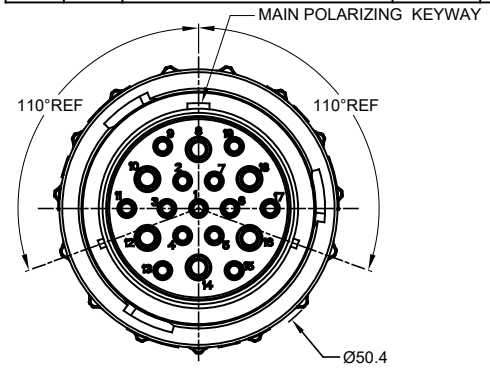

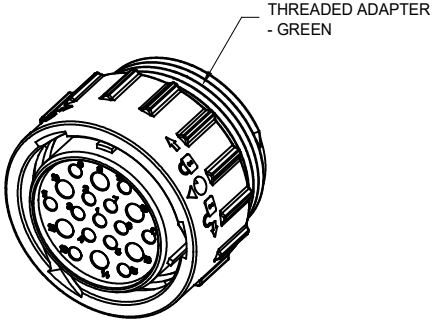

NOTES: UNLESS OTHERWISE SPECIFIED

1. MATERIAL:
   HOUSING: THERMOPLASTIC; BLACK
   SEAL: SILICONE RUBBER

2. MODIFICATIONS: THREADED ADAPTER

3. SPECIFICATIONS:
   3.1 OPERATING TEMPERATURE: -55℃ TO +125℃.
   3.2 DIELECTRIC WITHSTANDING VOLTAGE: LESS THAN 2 MILLIAMPS CURRENT LEAKAGE @ 1500 VOLTS AC.
   3.3 INSULATION RESISTANCE: 1000 MEGOHM MIN @ 25℃.
   3.4 MOISTURE RESISTANCE: IP67&IP69K (MATED CONDITION).
   3.5 MATING CYCLE DURABILITY: 100 CYCLES
   3.6 RoHS COMPLIANT

4. MATING PART: AHDP04-24-19P* (* = SEAL TYPE)

5. ALL DIMENSIONS ARE FOR REFERENCE USE ONLY.

6 CONTACT SIZE AND WIRE RANGE:

CONTACT SIZE	MIN. INSUL O.D.	MAX. INSUL O.D.	TYPICAL WIRE RANGE	CURRENT RATING
12	3.43 mm (.135 in)	4.32 mm (.170 in)	10-14 AWG	25 AMPS
16	2.54 mm (.100in)	3.40 mm (.134 in)	14-20 AWG	13 AMPS

QUANTITY	PART NUMBER	DESCRIPTION	ITEM
	AHDP06-24-19SN-WTA		

MATERIALS LIST

UNLESS OTHERWISE SPECIFIED
1) All dimensions are in metric(mm).
2) Tolerances are as follows:
1 PL DEC ±0.30
2 PL DEC ±0.15
3 PL DEC ±0.08
Fractions ±1/64
Angles ±1°
3) Note reference = 6

MATERIAL SPECIFICATIONS:

PROCESS SPECIFICATIONS:

NEXT ASS'Y:

SIGNATURES		DATE
DRAWN:	KASOON	26JUN18
CHECKED:	ORION	26JUN18
ENGINEER:		
APPROVAL:	TOMMY	26JUN18
CUSTOMER:		

THIS DRAWING IS SUPPLIED FOR INFORMATION ONLY. DESIGN FEATURES, SPECIFICATIONS AND PERFORMANCE DATA SHOWN HEREON ARE THE PROPERTY OF THE AMPHENOL CORPORATION. NO RIGHTS OF REPRODUCTION ARE IMPLIED. ALL DIMENSIONS ARE SUBJECT TO NORMAL MANUFACTURING VARIATIONS.

Amphenol

Sine Systems - www.amphenol-sine.com
44724 Morley Drive
Clinton Township, MI 48036

PLUG,24-19 POS,SOCKET CONTACT
STANDARD DIA. SEAL, AHDP SERIES

SIZE	TYPE	DWG NO:	REVISION
B	C-	AHDP06-24-19SN-WTA	A3

SCALE: NONE SHEET 1 OF 1

TITLE: PLUG,24-19 POS,SOCKET CONT.,STANDARD DIA. SEAL,AHDP
DWG NO. AHDP06-24-19SN-WTA
REV: A3
SH: 1
OF: 1