Product data sheet

Automation technology - sensors and actuators

Product description	**M8 female panel mount connector, Contacts: 4, unshielded, dip-solder, IP67, UL**
Area	**M8 series 718**
Order number	**99 3390 282 04**

Illustration

Conductor layout

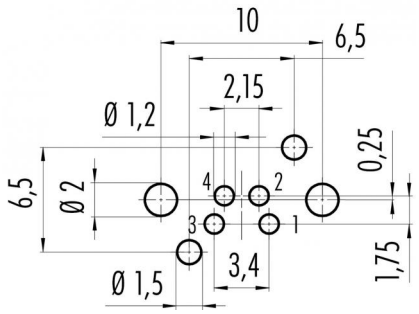

Scale drawing

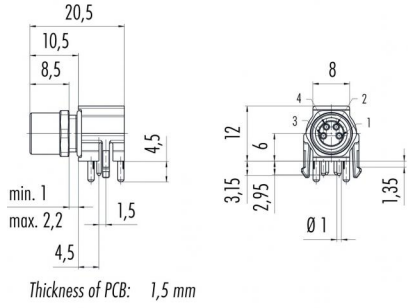

Contact arrangement (Plug-in side)

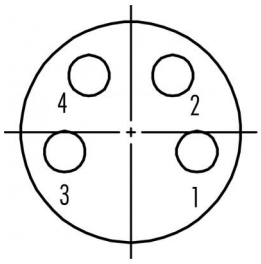

1 *brown*
2 *white*
3 *blue*
4 *black*

You can find the assembly instructions on the next page.

Technical data

General features

Order number	99 3390 282 04
Connector design	female panel mount connector
Version	connector female angled
Connector locking system	screw
Termination	dip-solder
Degree of protection	IP67
Temperature range from/to	-40 °C / 85 °C
Mechanical operation	> 100 Mating cycles
Weight (g)	3.549
Customs tariff number	85369010

Electrical parameters

Rated voltage	60 V
Rated impulse voltage	1500 V
Rated current (40 °C)	4 A
Pollution degree	3
Overvoltage category	II
Insulating material group	II
EMC compliance	unshielded

Material

Contact body material	PA
Contact material	CuSn (bronze)
Contact plating	Au (gold)
REACH SVHC	CAS 7439-92-1 (Lead)

Authorization/approvals

Approvals	UL

Classifications

eCl@ss 11.1	27-44-01-02
ETIM 7.0	EC002635

Product description	**M8 female panel mount connector, Contacts: 4, unshielded, dip-solder, IP67, UL**
Area	**M8 series 718**
Order number	**99 3390 282 04**

Assembly instructions / Panel cut-out

1st Installation proposal
With flats as anti-rotation device

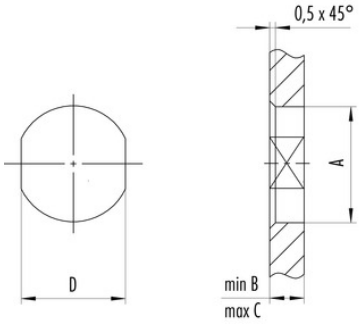

2nd Installation proposal
With bore hole

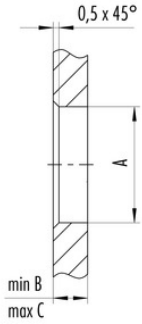

3rd Installation proposal
With thread to screw in

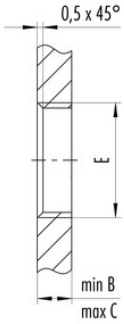

Thread E	A	B	C	D
M8 x 0,5	8,1	2,5	3,5	7,1
M8 x 1	8,1	2,5	3,5	7,1
M10 x 0,75	10,1	2,5	5,0	9,1

Tightening torque

M8 x 0,5	0,8 Nm
M8 x 1/M10 x 0,75	1,0 Nm

Product description	**M8 female panel mount connector, Contacts: 4, unshielded, dip-solder, IP67, UL**
Area	**M8 series 718**
Order number	**99 3390 282 04**

Security notices

The connectors have been developed for applications in plant engineering, control and electrical equipment construction. The user is responsible for checking whether the connectors can also be used in other areas of application.
Plug connectors with enclosure protection IP 67 and IP 68 are not suitable for use under water. When used outdoors, the plug connectors must be protected separately against corrosion. For further information on the IP protection classes, please refer to the "Technical Information" download centre.