Product data sheet

Automation technology - data transmission and power supply

Product description	**M12-T female angled connector, Contacts: 4, 8.0 - 10.0 mm, not shielded, screw clamp, IP67, UL, VDE**
Area	**M12-T series 813**
Order number	**99 0630 58 04**

Illustration

Scale drawing

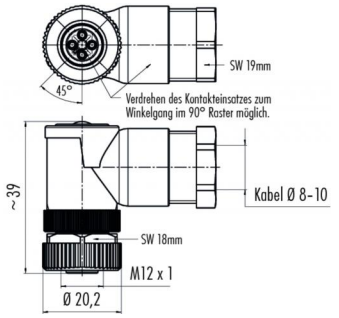

Contact arrangement

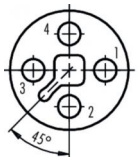

	X	Y
1	2,55	0,00
2	0,00	-2,55
3	-2,55	0,00
4	0,00	2,55

1 braun
2 weiß
3 blau
4 schwarz

Derating curve

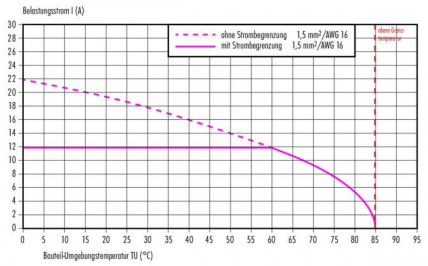

You can find the assembly instructions on the next page.

Technical data

General values

Connector design	female angled connector
Connector locking system	screw
Termination	screw clamp
Wire gauge (mm)	1.50 mm²
Wire gauge (AWG)	16
Cable outlet	8.0 - 10.0 mm
Upper limit temperature	85 °C
Lower limit temperature	– 40 °C
Customs tariff number	85369010
Packaging Unit	50

Cable data

Approval 1	UL
Approval 2	VDE

Electrical values

Rated current (40 °C)	12 A
Rated voltage	63 V
Rated impulse voltage	1500 V
Pollution degree	3
Overvoltage category	III
Insulating material group	III
EMC compliance	not shielded
Degree of protection	IP67
Mechanical operation	> 100 Mating cycles

Material

Contact material	CuZn (brass)
Contact plating	Au (gold)
Contact body material	PA
Housing material	Zinc die-cast nickel-plated

Product description	**M12-T female angled connector, Contacts: 4, 8.0 - 10.0 mm, not shielded, screw clamp, IP67, UL, VDE**
Area	**M12-T series 813**
Order number	**99 0630 58 04**

Assembly instructions / Panel cut-out

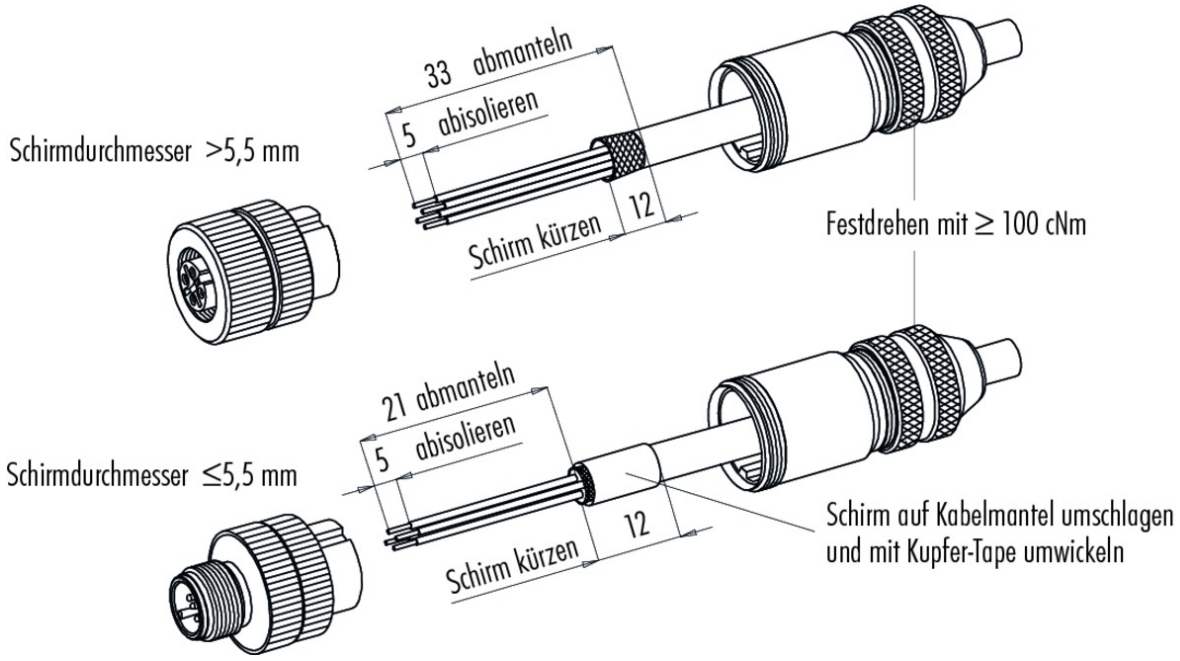

Product description	**M12-T female angled connector, Contacts: 4, 8.0 - 10.0 mm, not shielded, screw clamp, IP67, UL, VDE**
Area	**M12-T series 813**
Order number	**99 0630 58 04**

Security notices

The connectors are designed for use in plant, control system and electrical equipment. The end user is responsible for checking whether the connectors are suitable for use in other applications.
Connectors with degree of protection IP 67 and IP 68 are not suitable for use under water. When used outdoors, the connectors must be separately protected against corrosion. For further information about IP degrees of protection refer to 'Technical support' in the Download Centre.
To lock the cable connector to the equipment connector, the threaded ring is tightened until it is 'finger-tight' (approx. 50 cNm).