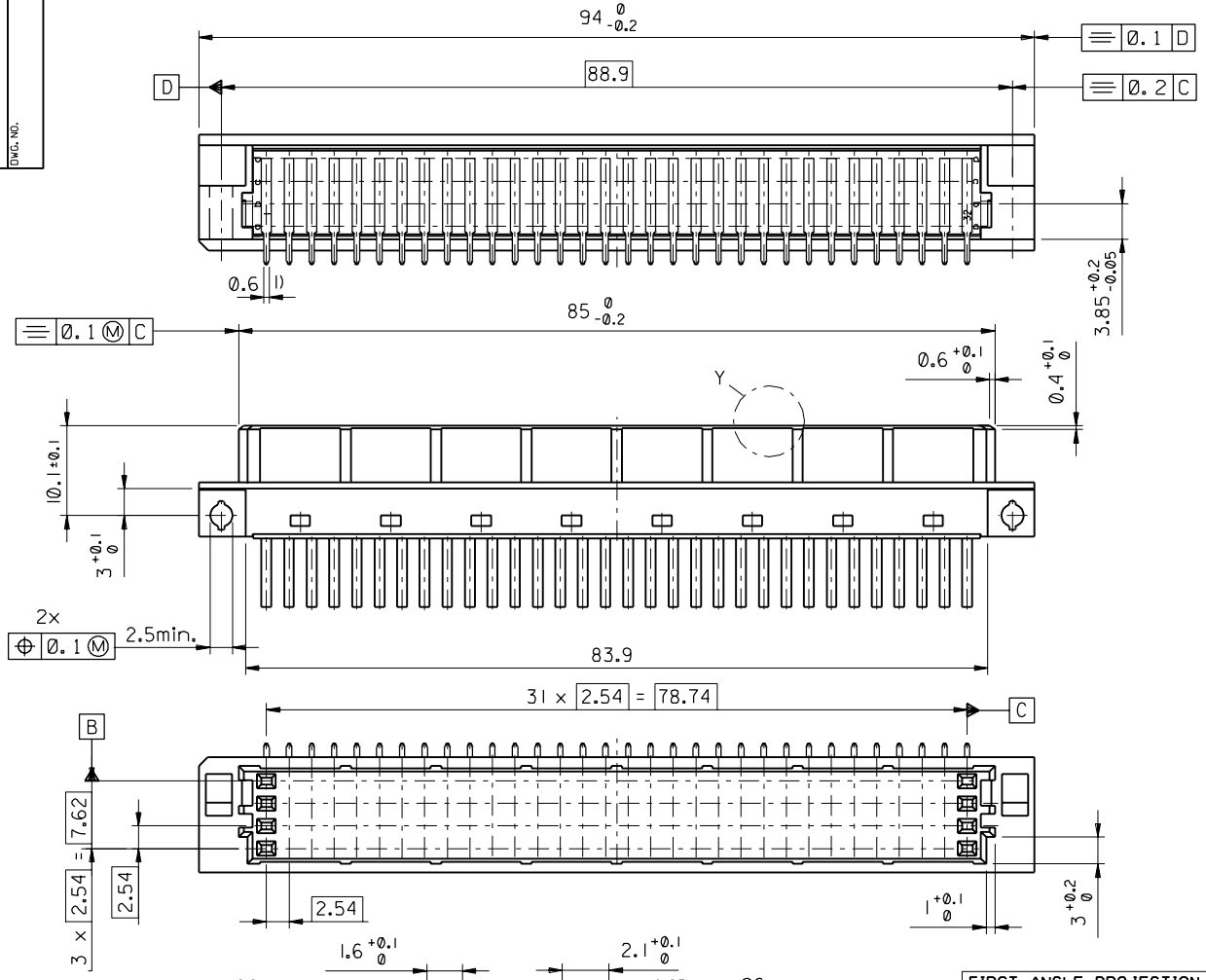

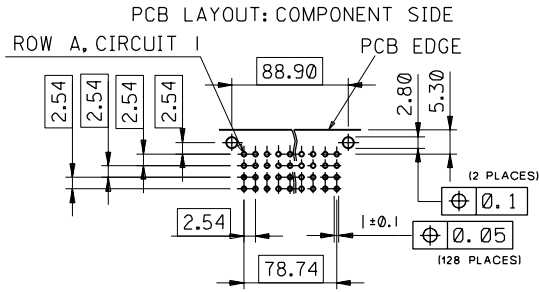

1) tails to fit in PC-board layout

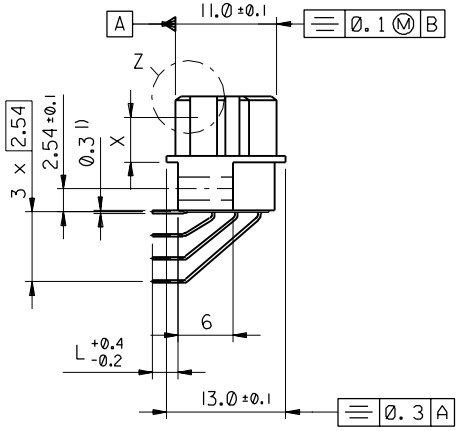

PART NO.

DWG. NO.

ECN MG1998-2586 L +0.4-0.2, Lochbild 97-09-18 KN		FIRST ANGLE PROJECTION		REVISE ONLY ON CAD SYSTEM	SH. REV.
B	LTR REVISIONS FOR PREVIOUS REVISIONS SEE MRI LIST	UNLESS OTHERWISE SPECIFIED TOLERANCES: ANGULAR ± 2° INCH / METRIC 3 PLACE ± / ± 2 PLACE ± / ± 1 PLACE ± / ± DRAFT WHERE APPLICABLE MUST REMAIN WITHIN DIMENSIONS DESIGN DIMENSION ☒ MM ☐ IN. EQUIVALENT DIMENSION ☐ MM ☐ IN. IF TWO DIMENSIONS ARE SHOWN THE UPPER IS THE DESIGN DIMENSION, LOWER IS SECONDARY	DRWG BY KN CHK'D BY Ca APP'D BY JB SCALE 2:1	SIGN SIGN SIGN	CADCAM PROJECT NAME 85054000 s11 THIS DRAWING CONTAINS INFORMATION THAT IS PROPRIETARY TO MOLEX INC. & SHOULD NOT BE USED WITHOUT WRITTEN PERMISSION	

TITLE

128 pos. female connector DIN 41612 complies with style R, Dimensions

molex MOLEX EUROPE

SHEET NO.	DATE	PART NO.	DWG NO.	SIZE
1 OF 1	96/07/29		SDA-85054-0001	B

7132-1283

VIEW ON MATING SIDE

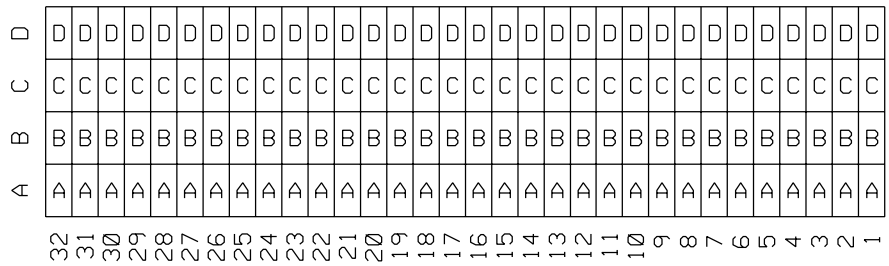

A = 32 CONTACTS L=3,4
B = 32 CONTACTS L=3,4
C = 32 CONTACTS L=3,4
D = 32 CONTACTS L=3,4

S =128 TOTAL NUMBER OF CONTACTS

Marking	Standard
Performance level	G2/0 = Contact area level2 / Termination tin
Flux proof	no
Fixing clip	no
Dimensions	SDA-85054-0001 sht.1
Technical Data	PS-85052-0001

D	G2/0	d1-32
C	G2/0	c1-32
B	G2/0	b1-32
A	G2/0	a1-32
Contact symbol	Perform. level	Contact position number

ECN 2264
Produktspec.
96-10-21 KN

A1

LTR REVISIONS

FOR PREVIOUS REVISIONS SEE MRI LIST

UNLESS OTHERWISE SPECIFIED TOLERANCES: ANGULAR ±2°

	INCH	METRIC
3 PLACE	± .	±
2 PLACE	± .	±
1 PLACE	± .	±

DRAFT WHERE APPLICABLE MUST REMAIN WITHIN DIMENSIONS

DESIGN DIMENSION ☐ MM ☐ IN.

EQUIVALENT DIMENSION ☐ MM ☐ IN.

IF TWO DIMENSIONS ARE SHOWN THE UPPER IS THE DESIGN DIMENSION, LOWER IS SECONDARY

DRWG BY KN SIGN
CHK'D BY Ca SIGN
APP'D BY SIGN
SCALE

REVISE ONLY ON CAD SYSTEM SH. REV.

CADCAM PROJECT NAME s8505400 s11

THIS DRAWING CONTAINS INFORMATION THAT IS PROPRIETARY TO MOLEX INC. & SHOULD NOT BE USED WITHOUT WRITTEN PERMISSION

TITLE
128 pos. female connector acc. DIN 41612 style R contacts arrangement

MOLEX EUROPE

SHEET NO. 1 OF 1

DATE 96/07/10

PART NO. 85054-0012

DWG NO. SDA-85054-0012

SIZE A