molex
one company › a world of innovation

This document was generated on 07/03/2013

PLEASE CHECK WWW.MOLEX.COM FOR LATEST PART INFORMATION

Part Number: 76165-3304

Status: Active

Overview: Impact™ Backplane Connectors and Cable Assemblies

Description: Impact™ 100 Ohm 3 Pair Vertical Backplane Header, 1.90 by 1.35mm Pitch, Left Guide, Open Endwall, 6 Columns, 54 Circuits, Pin Length 4.90mm, Plated Through Hole Dimension 0.46mm, Lead-Free

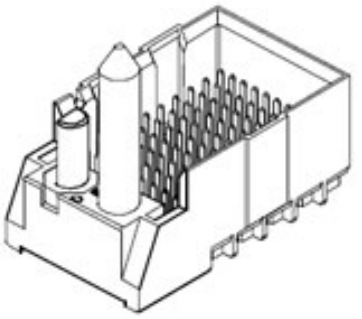

Series

image - Reference only

Documents:

Drawing (PDF)
Product Specification PS-76060-999 (PDF)
Application Specification AS-76060-990 (PDF)
RoHS Certificate of Compliance (PDF)

Agency Certification

UL	E29179

General

Product Family	Backplane Connectors
Series	76165
Application	Conventional
Component Type	PCB Header
Overview	Impact™ Backplane Connectors and Cable Assemblies
Product Name	Impact™
Style	N/A
UPC	887191144122

Physical

Circuits (Loaded)	54
Circuits (maximum)	54
Color - Resin	Black
Durability (mating cycles max)	200
First Mate / Last Break	No
Flammability	94V-0
Guide to Mating Part	Yes
Keying to Mating Part	None
Material - Metal	High Performance Alloy (HPA)
Material - Plating Mating	Gold
Material - Plating Termination	Tin
Material - Resin	High Temperature Thermoplastic
Net Weight	4.207/g
Number of Columns	6
Number of Pairs	3
Number of Rows	9
Orientation	Vertical
PC Tail Length	1.40mm
PCB Locator	No
PCB Retention	Yes
PCB Thickness - Recommended	1.00mm
Packaging Type	Tray
Pitch - Mating Interface	1.90mm
Pitch - Termination Interface	1.90mm
Plating min - Mating	0.762µm
Polarized to PCB	Yes
Stackable	Yes
Temperature Range - Operating	-55°C to +85°C
Termination Interface: Style	Through Hole - Compliant Pin

Electrical

EU RoHS
ELV and RoHS Compliant

China RoHS

REACH SVHC
Not Reviewed

Low-Halogen Status
Low-Halogen

Need more information on product environmental compliance?

Email productcompliance@molex.com
For a multiple part number RoHS Certificate of Compliance, click here

Please visit the Contact Us section for any non-product compliance questions.

Search Parts in this Series
76165Series

Mates With
76170 Impact™ 100 Ohm Daughtercard

Application Tooling | **FAQ**

Tooling specifications and manuals are found by selecting the products below. Crimp Height Specifications are then contained in the Application Tooling Specification document.

Global

Description	Product #
Backplane Insertion Tool for Signal Contact	0621005800
Backplane Header Removal Tool for GbX-U™, I-Trac™, Impact™, or TinMan	0621009610
Backplane Press-In Tool	0622018781

Current - Maximum per Contact	0.75A
Data Rate	25.0 Gbps
Impedance	100#
Shield Type	N/A
Shielded	No
Voltage - Maximum	30V AC (RMS)/DC

Material Info

Reference - Drawing Numbers

Application Specification	AS-76060-990
Product Specification	PS-76060-999
Sales Drawing	SD-76165-002
Symbol/Footprint Data	SYM-76165-3304

This document was generated on 07/03/2013

PLEASE CHECK WWW.MOLEX.COM FOR LATEST PART INFORMATION