Part Number: 63891-8100
Status: Active
Description: Mini-Mac™ Applicator for Board-In Crimp Terminals

Documents:
RoHS Certificate of Compliance (PDF)

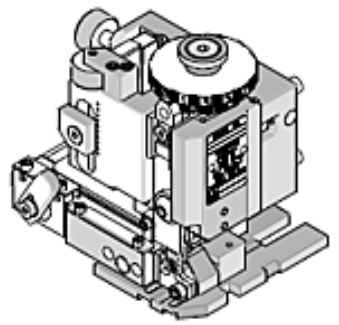

Series
image - Reference only

General

Product Family	Application Tooling
Series	T9999
Comments	See Tooling Specification (PDF) Above
Function	Crimp
Geographic Area	Global
Level of Automation	Automatic, Semi-Automatic
More Detailed Tech Information	applicationtooling@molex.com
Product Name	Mini-Mac™
Survey	www.molex.com//review/apptool_survey.html
Tool Type	Applicator
UPC	887191727103

Material Info

Reference - Drawing Numbers

Application Tooling Documents	ATS-638918100, TM-638000100, TM-638000100SP

EU RoHS
ELV and RoHS Compliant
REACH SVHC
Not Reviewed
Low-Halogen Status
Not Reviewed

China RoHS

Need more information on product environmental compliance?

Email productcompliance@molex.com
For a multiple part number RoHS Certificate of Compliance, click here

Please visit the Contact Us section for any non-product compliance questions.

Search Parts in this Series
T9999Series

Use With
Molex TM-3000™: 63801-7200 , 63801-7300 , Molex TM-4000™: 63801-7600 , Molex TM-2000™: 63800-8300 , 63800-8400 , and Most Industry Standard Presses or Wire Process Machines