Part Number: 63832-0700

Status: Active

Description: Mini-Mac™ Applicator Air Feed for Power 60 Amp Crimp Terminals, 8 AWG

Documents:
RoHS Certificate of Compliance (PDF)

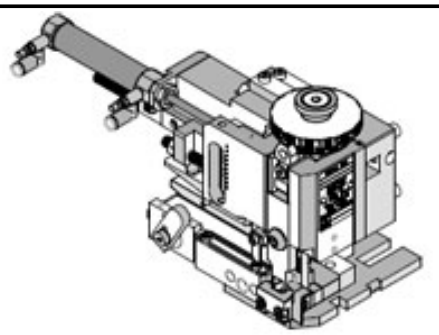

Series

image - Reference only

General

Product Family	Application Tooling
Series	T9999
Comments	See Tooling Specification (PDF) Above
Function	Crimp
Geographic Area	Global
Level of Automation	Automatic
More Detailed Tech Information	applicationtooling@molex.com
Product Name	Mini-Mac™
Survey	www.molex.com//review/apptool_survey.html
Tool Type	Applicator
UPC	884982018167

Material Info

Reference - Drawing Numbers

Application Tooling Documents	ATS-638013501, ATS-638320700

EU RoHS **China RoHS**
Compliance Status
Not Reviewed
REACH SVHC
Not Reviewed
Low-Halogen Status
Not Reviewed

Need more information on product environmental compliance?

Email productcompliance@molex.com
For a multiple part number RoHS Certificate of Compliance, click here

Please visit the Contact Us section for any non-product compliance questions.

Search Parts in this Series
T9999Series

Use With
TM-4000™ 63801-7600

Application Tooling Description	| FAQ Product #
EXTreme Guardian™ High Power Terminal, 8 AWG Crimp, 0.76µm Gold (Au)	0468190012