**Part Number:** 63445-1405
**Status:** Active
**Description:** Insulation Anvil

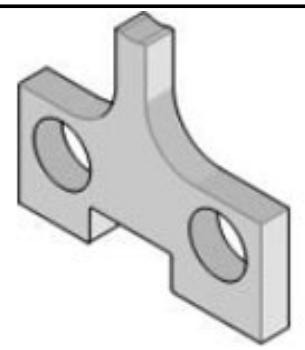

*Series*

*image - Reference only*

**Documents:**
RoHS Certificate of Compliance (PDF)

## General

| | |
|---|---|
| Product Family | Application Tooling |
| Series | T9999 |
| Comments | See Tooling Specification (PDF) Above |
| Function | Cutter |
| Geographic Area | Global |
| Level of Automation | Semi-Automatic |
| More Detailed Tech Information | applicationtooling@molex.com |
| Product Name | N/A |
| Survey | www.molex.com//review/apptool_survey.html |
| Tool Type | Anvil |
| UPC | 800753155725 |

## Material Info

## Reference - Drawing Numbers

| | |
|---|---|
| Application Tooling Documents | ATS-STANDARD-PARTS |

**EU RoHS**
**ELV and RoHS Compliant**
**REACH SVHC**
Not Reviewed
**Low-Halogen Status**
**Not Reviewed**

**China RoHS**

**Need more information on product environmental compliance?**

Email productcompliance@molex.com
For a multiple part number RoHS Certificate of Compliance, click here

Please visit the Contact Us section for any non-product compliance questions.

**Search Parts in this Series**
T9999Series

**Use With**
63852-8000 , 63852-8070 , 63854-3000 , 63854-3070 , 63862-8000 , 63862-8070 , 63864-3000 , 63864-3070 , 63900-5200 , 63900-5270 , 63910-5200 , 63910-5270